SERIES: V78-500-SMT | **DESCRIPTION:** NON-ISOLATED SWITCHING REGULATOR

DISCONTINUED

FEATURES

- 500 mA current output
- high efficiency up to 96%
- no heat sink required
- SMT package
- remote on/off control
- low ripple and noise
- short circuit protection, thermal shutdown
- wide temperature (-40°C~+85°C)

RoHS

MODEL

MODEL	input voltage typ (Vdc)	input voltage range (Vdc)	output voltage (Vdc)	output current (mA)	output power max (W)	ripple and noise[1] max (mVp-p)	efficiency Vin min (%)	efficiency Vin max (%)
V7803-500-SMT*	12	4.5 ~ 28	3.3	500	1.65	25	90	75
V7805-500-SMT	12	6 ~ 28	5	500	2.5	25	94	81
V7812-500-SMT[2]	24	14 ~ 28	12	500	6	25	95	90
V7815-500-SMT[2,*]	24	17 ~ 28	15	500	7.5	25	96	92

Notes:
1. ripple & noise are measured at 20 MHz BW with 1 µF ceramic cap and 10 µF electrolytic capacitors on the output
2. must operate with a minimum of 5% loading
3. * Discontinued model
4. Tape and reel option discontinued.

PART NUMBER KEY

V78 XX - XXX -SMT- X

- V78 — Base Number
- XX — Output Voltage
- XXX — Output Current
- X — Package Options TR = Tape & Reel

Please read our datasheet & drawing disclaimer here.

Downloaded from Arrow.com.

DISCONTINUED

INPUT

parameter	conditions/description	min	typ	max	units
input voltage	3.3 Vdc output 5 Vdc output 12 Vdc output 15Vdc output	4.5 6 14 17	12 12 24 24	28 28 28 28	Vdc Vdc Vdc Vdc
remote on/off shutdown threshold voltage		1.1	1.25	1.4	Vdc
on/off control current	on: open or 1.5<Vc≤6V off: GND or 0V<Vc<1V		2		µA
shutdown input current			15	30	µA

OUTPUT

parameter	conditions/description	min	typ	max	units
max capacitive load				1000	µF
line regulation	measured from low line to high line at 100% load		±0.2	±0.5	%
load regulation	measured from 10% to full load at nominal input		±0.3	±0.75	%
voltage accuracy	measured from low line to high line at 100% load		±2	±3	%
adjustability[1]	see application notes				
temperature coefficient				±0.02	%/°C

Notes: 1. output voltage adjustment must meet Vin-Vo > 2V requirement

PROTECTIONS

parameter	conditions/description	min	typ	max	units
short circuit protection	hiccup, continuous, automatic recovery				
thermal shutdown	internal IC junction		160		°C
current limit			1.8		A

SAFETY AND COMPLIANCE

parameter	conditions/description	min	typ	max	units
RoHS	2011/65/EU				
MTBF	as per MIL-HDBK-217F, 25°C	2,000,000			hours

ENVIRONMENTAL

parameter	conditions/description	min	typ	max	units
case operating temperature				100	°C
operating temperature	see derating curve	-40		85	°C
storage temperature		-55		125	°C
storage humidity				95	%
hand soldering	for 10 seconds			300	°C
reflow soldering	at maximum duration time ≤60s at 217°C refer to IPC/JEDEC J-STD-020D.1			240	°C

Downloaded from Arrow.com.

DERATING CURVES

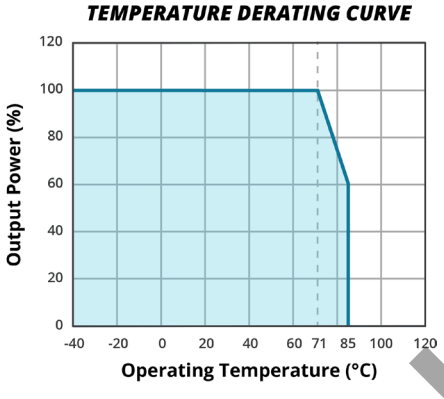

MECHANICAL

parameter	conditions/description	min	typ	max	units
dimensions	15.24 x 8.30 x 7.25 (0.600 x 0.327 x 0.285 inch)				mm
case material	plastic (UL94-V0)				
weight			2.3		g

MECHANICAL DRAWING

units: mm [in]
pin tolerance: ±0.10 mm [±0.004 in]
general tolerance: ±0.25 mm [±0.010 in]

PIN CONNECTIONS	
1	Vin
5	Vout
6	Vadj
7	GND
9	GND
10	On/Off

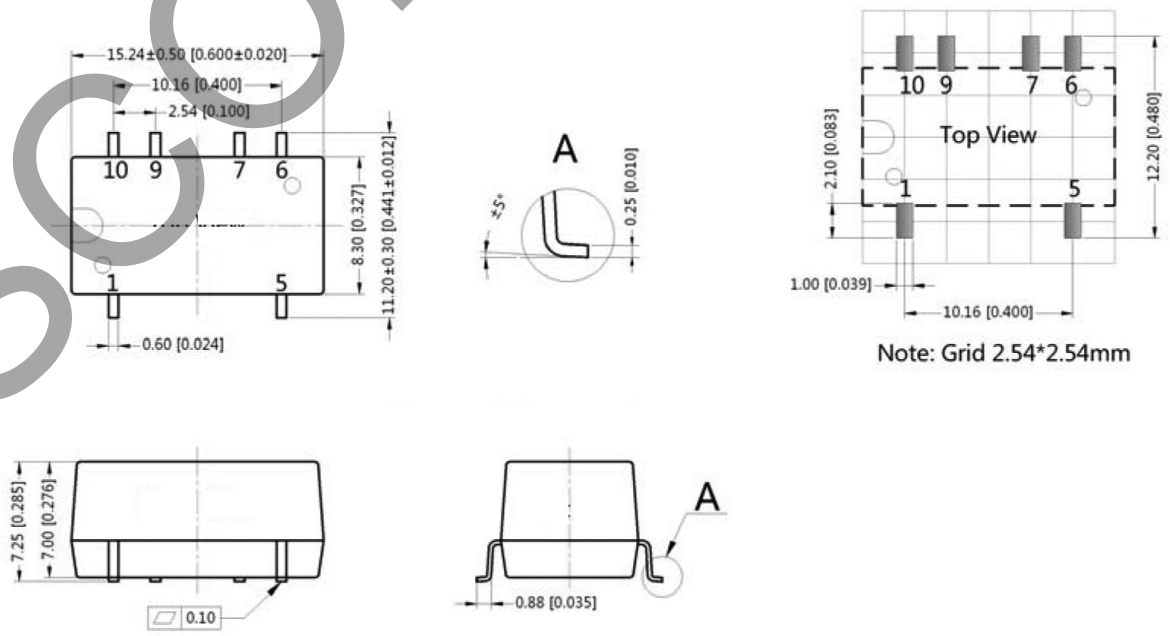

DISCONTINUED

Downloaded from Arrow.com.

PACKAGING DIMENSIONS

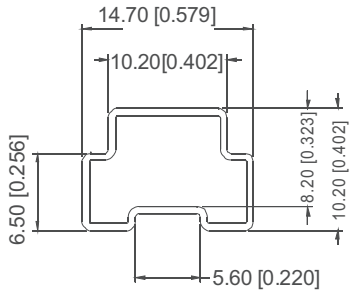

Note:
Unit :mm[inch]
General tolerances: ± 0.50mm[± 0.020inch]

L=530mm[20.866inch] Tube Quantity: 33pcs
L=220mm[8.661inch] Tube Quantity: 13pcs

Taping dimension:

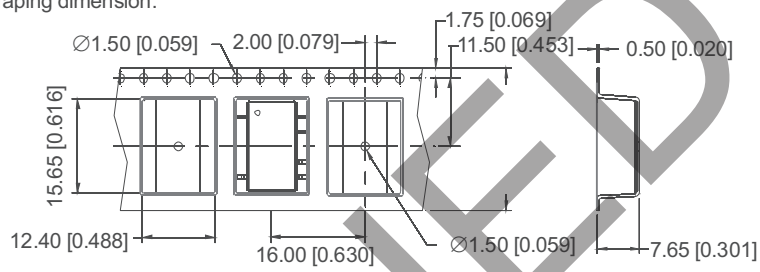

Taping reel dimension:

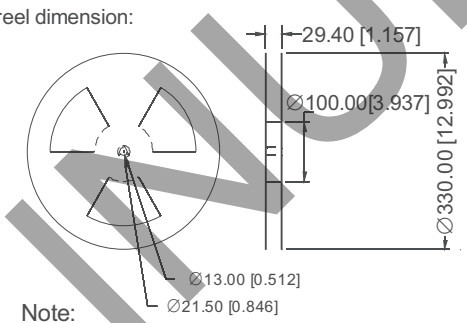

Note:
Unit :mm[inch]
General tolerances: ±0.50mm[±0.020inch]
Devices per reel quantity:500pcs

TYPICAL APPLICATION CIRCUIT

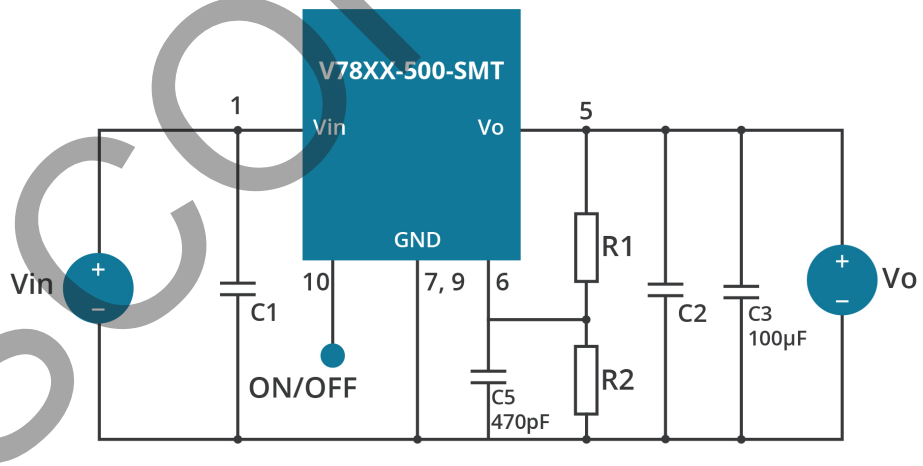

1. C1, C2: Use ceramic capacitors (see table below); C3: For best performance, use a 100 µF or more capacitor.
2. C1, C2, & C3 are required and should be placed close to the pins of the converter, with shortest possible leads.
3. R1 is used when trimming down. R2 is used when trimming up.
4. No parallel connection or plug and play.

Part Number	C1 (ceramic capacitor)	C2 (ceramic capacitor)
V7803-500-SMT	10uF/50V	22uF/16V
V7805-500-SMT	10uF/50V	22uF/16V
V7812-500-SMT	10uF/50V	10uF/25V
V7815-500-SMT	10uF/50V	10uF/25V

DISCONTINUED

Downloaded from Arrow.com.

OUTPUT TRIMMING

Part Name	Vo nom	Trim Down	Trim Up
		R1(KΩ)	R2(KΩ)
V7803-500-SMT	3.3V	$=\frac{61*Vo-75.10}{3.3-Vo}$	$=\frac{75.10-10*Vo}{Vo-3.3}$
V7805-500-SMT	5.0V	$=\frac{61*Vo-91.52}{5.0-Vo}$	$=\frac{91.52-10*Vo}{Vo-5.0}$
V7812-500-SMT	12V	$=\frac{71*Vo-287.02}{12-Vo}$	$=\frac{287.02-20*Vo}{Vo-12}$
V7815-500-SMT	15V	$=\frac{66*Vo-269.37}{15-Vo}$	$=\frac{269.37-15*Vo}{Vo-15}$

To trim the output of the device input the desired output voltage (Vo) into the proper equation. R1 trims the output voltage down and R2 trims the voltage up. If not using the trim feature R1 and R2 are left open. Make sure that the desired output voltage is within the trim range.

TEST CIRCUIT

Efficiency and Output Voltage Ripple Test

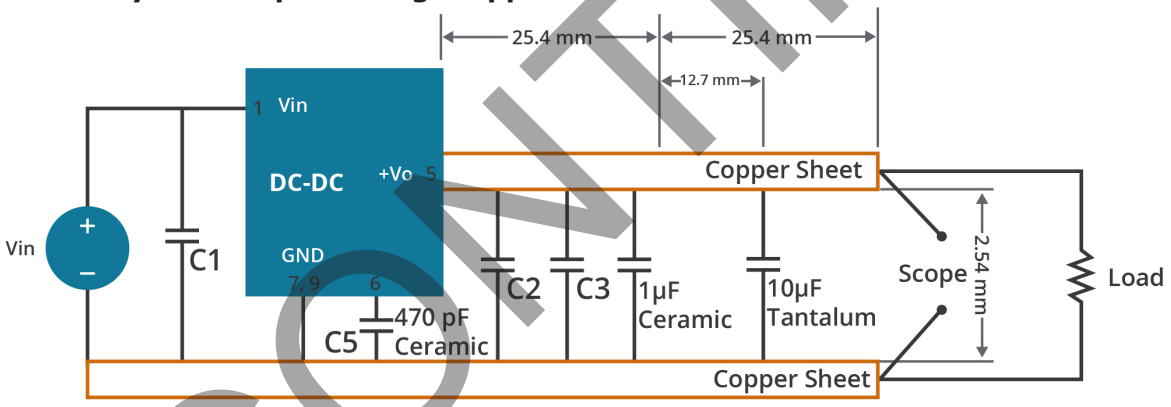

Start-up and Load Transient Response Test

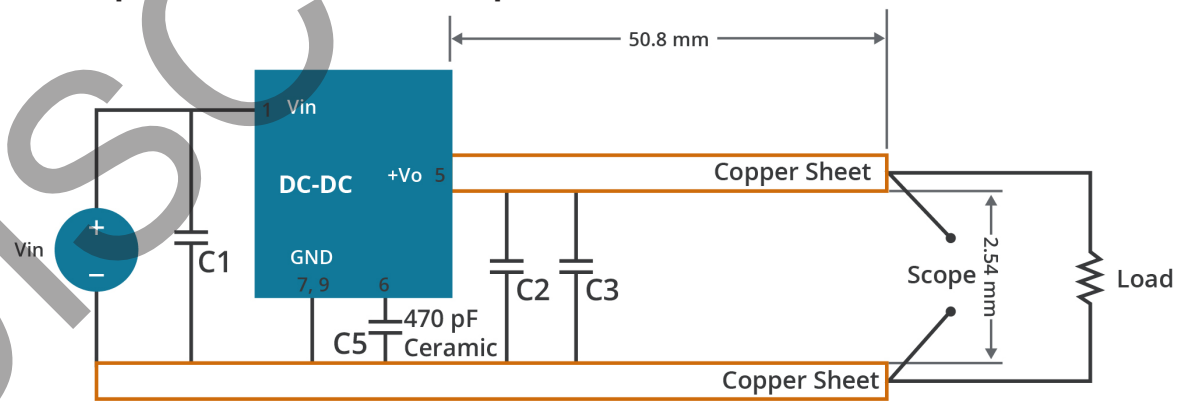

DISCONTINUED

Downloaded from Arrow.com.

EFFICIENCY AND RIPPLE

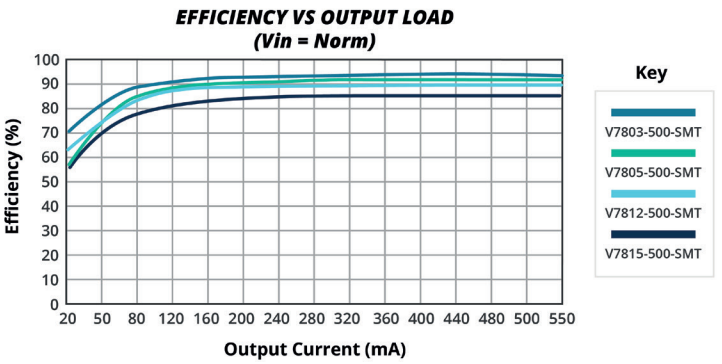

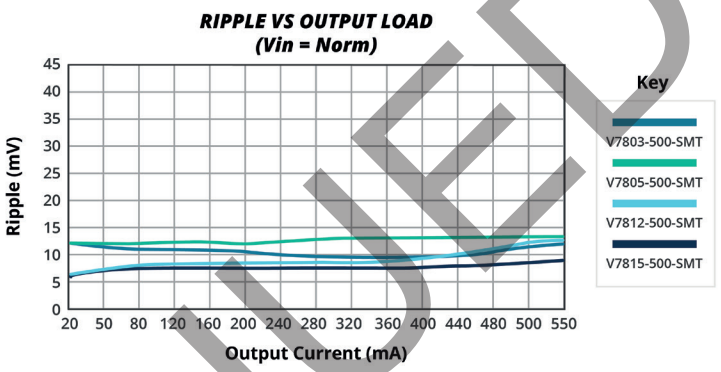

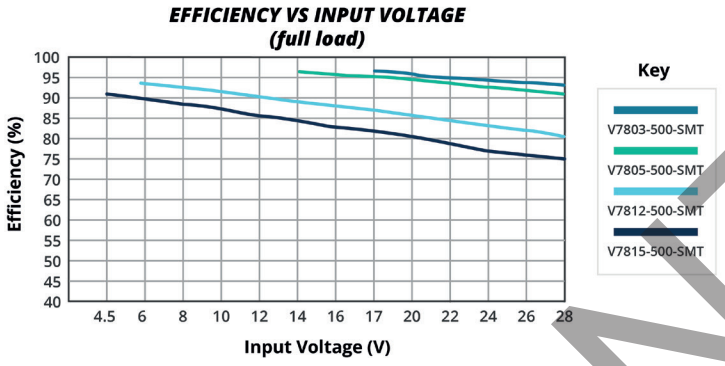

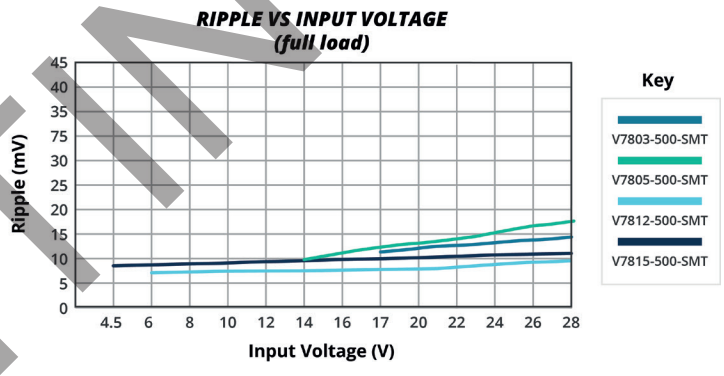

DISCONTINUED

Downloaded from Arrow.com.

SHUTDOWN CONTROL

The ON/OFF pin provides several features for adjusting and sequencing the power supply, a user has the flexibility of using the ON/OFF pin as:

1) A digital on/off control by pulling down the ON/OFF pin with an open-drain transistor.

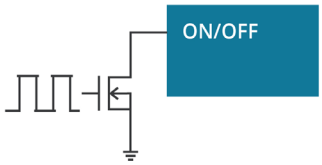

2) Line UVLO. If desired to achieve a UVLO voltage, a resistor divider from Vin to ON/OFF to GND can be used to disable the converter until a higher input voltage is achieved. For example, it is not useful for a converter with 12V output to start up with a 12V input, as the output cannot each regulation. To enable the converter when the input voltage reaches 14V, a 51kΩ/5kΩ voltage divider from Vin to GND can be connected to the ON/OFF pin. Both the precision 1.25V threshold and 150mV hysteresis are multiplied by the resistor ratio, providing a proportional 12% hysteresis for any startup threshold. So, the turn off threshold would be between 12.3V to 15.7V.

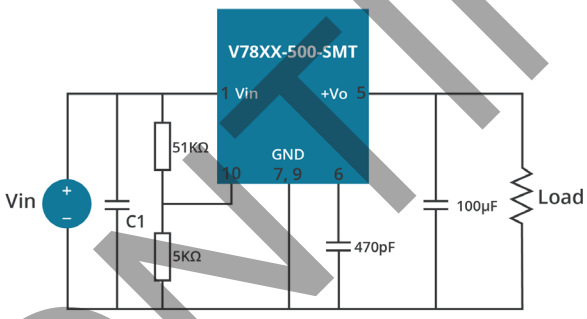

3) Power supply sequencing. By connecting a small capacitor from ON/OFF to GND, the 2µA current source and 1.25V threshold can provide a stable and predictable delay between startup of multiple power supplies. For example, a startup delay of roughly 64mS is provided using 100nF, and roughly 136mS by using 200nF.

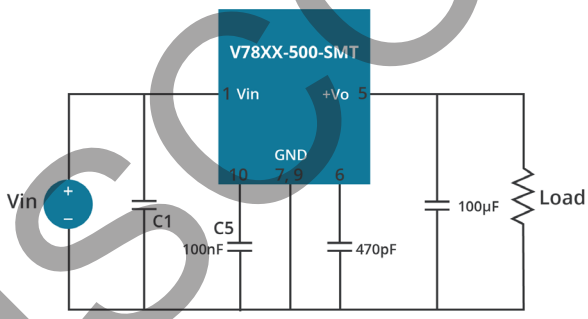

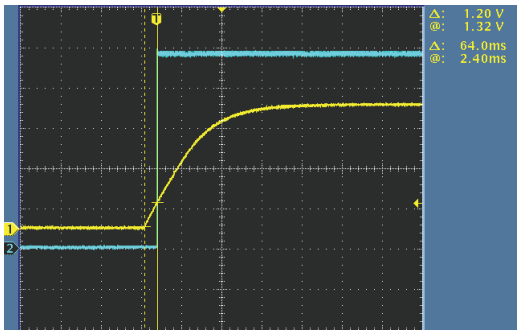

CH1: Von/off
CH2: Vo
Delay time: 64mS

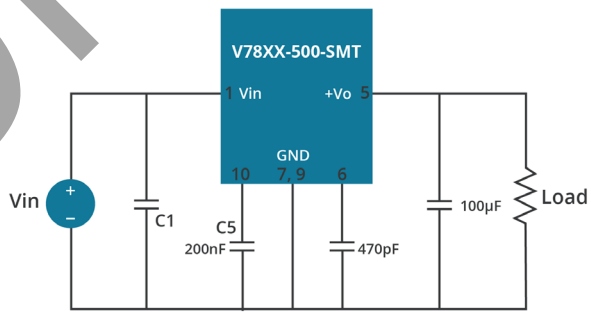

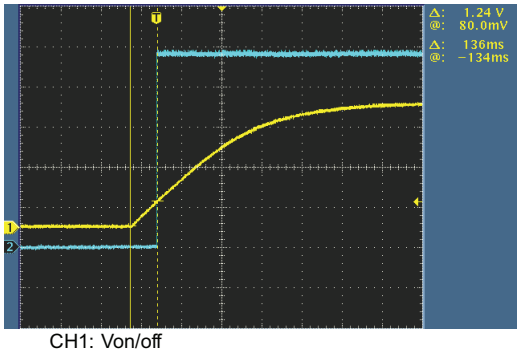

CH1: Von/off
CH2: Vo
Delay time: 136mS

DISCONTINUED

Downloaded from Arrow.com.

REVISION HISTORY

rev.	description	date
1.0	initial release	01/04/2008
1.01	new template applied	04/28/2009
1.02	V-Infinity branding removed	09/06/2012
1.03	added TR package option	10/31/2012
1.04	added minimum loading requirement note	01/30/2013
1.05	updated spec	03/08/2013
1.06	housing width changed, updated datasheet	01/26/2016
1.07	discontinued V7815-500-SMT model	06/24/2019
1.08	reflow soldering updated	09/14/2020
1.09	derating curve, efficiency curves and circuit figures updated	08/17/2021
1.10	standard packaging discontinued, PN key updated	05/30/2022
1.11	discontinued model V7803-500-SMT, V7803-500-SMT-TR, V7815-500-SMT-TR	10/05/2023

The revision history provided is for informational purposes only and is believed to be accurate.

DISCONTINUED

CUI INC
a bel group

Headquarters
20050 SW 112th Ave.
Tualatin, OR 97062
800.275.4899

Fax 503.612.2383
cui.com
techsupport@cui.com

CUI offers a two (2) year limited warranty. Complete warranty information is listed on our website.

CUI reserves the right to make changes to the product at any time without notice. Information provided by CUI is believed to be accurate and reliable. However, no responsibility is assumed by CUI for its use, nor for any infringements of patents or other rights of third parties which may result from its use.

CUI products are not authorized or warranted for use as critical components in equipment that requires an extremely high level of reliability. A critical component is any component of a life support device or system whose failure to perform can be reasonably expected to cause the failure of the life support device or system, or to affect its safety or effectiveness.

Downloaded from Arrow.com.