Alle Rechte vorbehalten/ *All rights reserved*

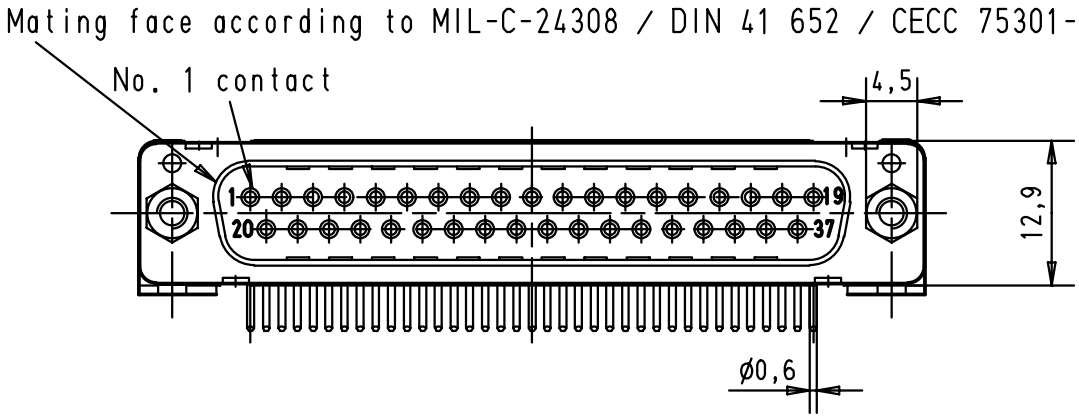

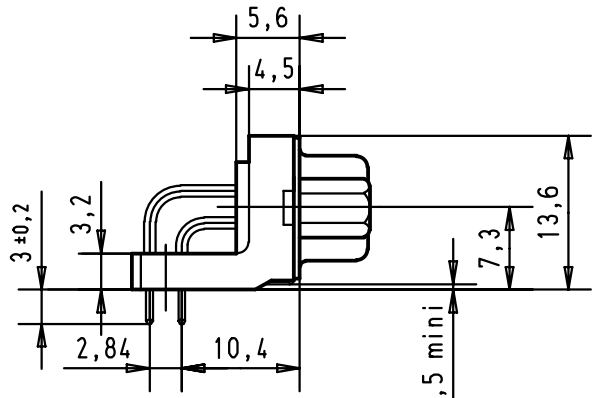

Printed board layout(1,6±0,2 thick)
View componemt side
(PCB plating = Tin)

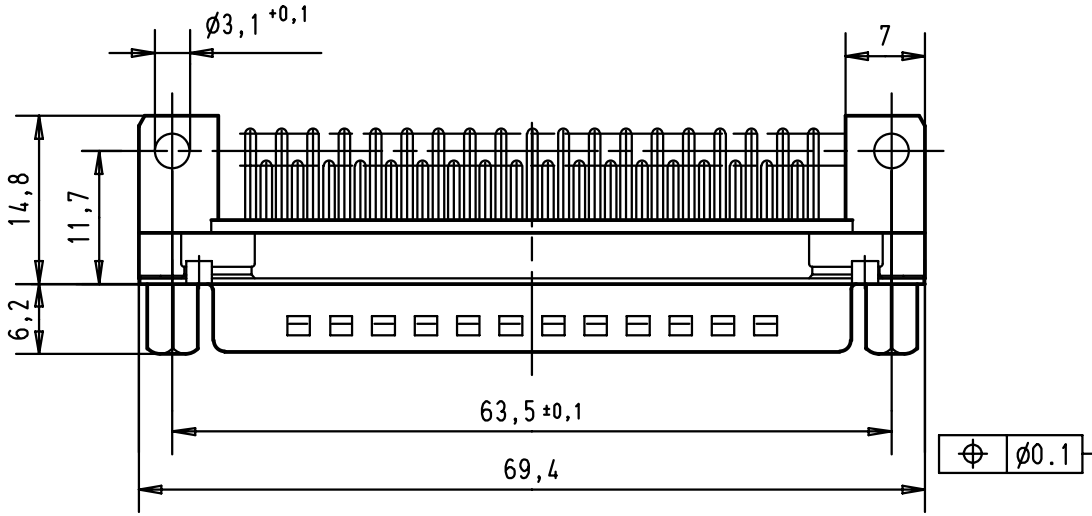

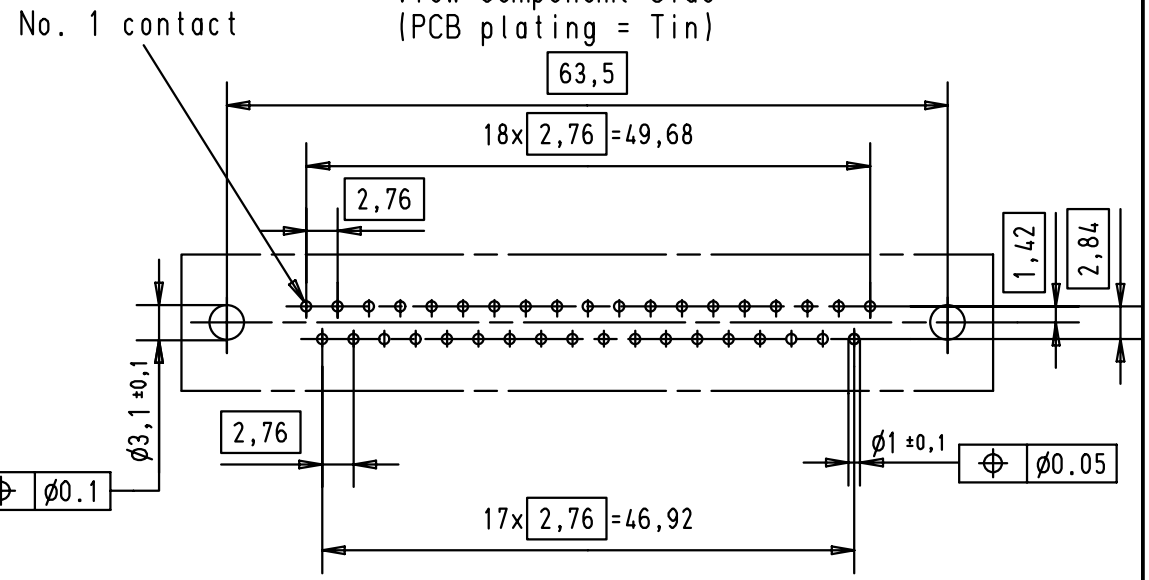

09 66 423 6803	4-40 UNC	2			
09 66 423 7803	4-40 UNC	3			
09 66 423 5803	4-40 UNC	0,76 µm Au	29733	23-NOV-01	JB
Part number	screw-lock	Performance level	Mod.	Dat.	Name

	Dat.	Name
Detail.	23-NOV-01	JB
Insp.		
Stand.		

All Dim. in mm
Orig. Size DIN A 4

D-Sub male standard 37 poles with solder pins and screw-lock

Maßstab/ *Scale* 1,5:1

HARTING EURL
F-95972 Paris

TB 09 66 423 X80X

Sub.

Blatt/ *Page* 3

Downloaded from Arrow.com.