© 2021 TE Connectivity. All Rights Reserved.

REVISIONS					
P	LTR	DESCRIPTION	DATE	DWN	APVD
	A	ECN-23-205329 TE STANDARD	30MAR2023	LG	AM

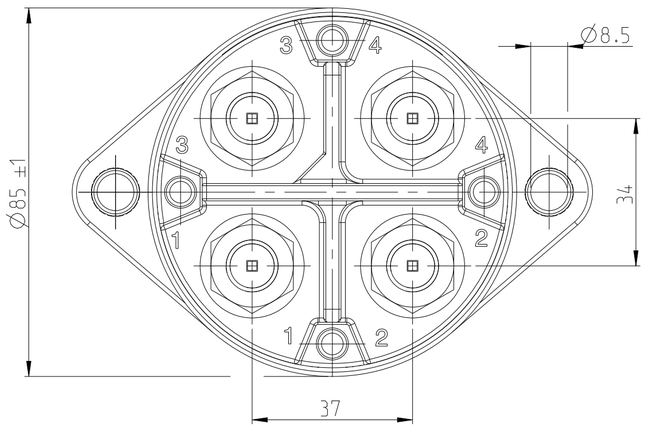

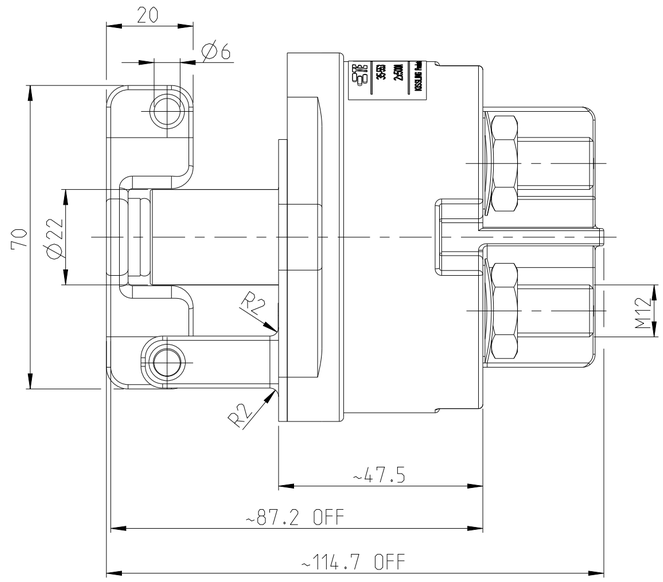

NOTES
Bemerkungen

1. TE-CONNECTIVITY ORDER-NUMBER
   TE-Connectivity Bestellnummer
2. DO NOT SWITCH UNDER LOAD!
   Nicht unter Last schalten!

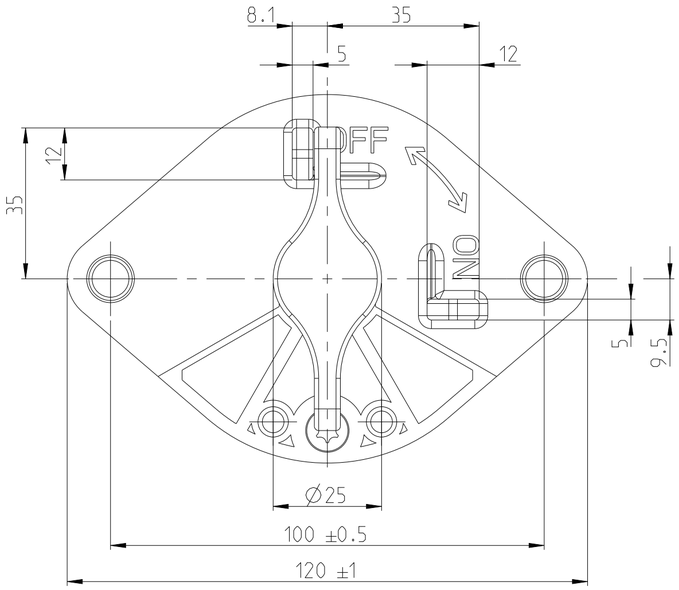

Technische Daten

Werkstoff: Haube	Vyncolit schwarz
Befestigungssockel	PA GF schwarz
Schalthebel	PA GF schwarz
Min. Isolationswiderstand	100 MOHM
Hochspannungsfestigkeit	1050V - 1 min.
Max. Kontaktspannungsabfall bei Nennlast	150 mV
Betriebsspannung	bis 32 VDC
Dauerstrom	2x500 A
Ueberlast	2x2000A - 1,5 min.
	2x2500A - 10 sec.
Schutzart	IP 67 / IEC 529
Vibraton	10 G / 18-500 Hz
Umgebungstemperatur	-40°C bis +85°C
Anschlussquerschnitt bei Nennlast	Min. 250 mm²
Schalthebel	nicht abziehbar
Max. Anzugsmoment (Hauptkontakte)	18 - 22 Nm

TECHNICAL DATA

CASE MATERIAL: COVER	VYNCOLIT BLACK
BASE PLATE	PA GF BLACK
SWITCH LEVER	PA GF BLACK
MIN INSULATION RESISTANCE	100 MOHM
DIELECTRIC WITHSTANDING RESISTANCE	1050V - 1 min.
MAX. CONTACT VOLTAGE DROP	150 mV
VOLTAGE	UP TO 32 VDC
CONTINUOUS RATING	2x500 A
OVERLOAD	2x2000A - 1,5 min.
	2x2500A - 10 sec.
SEALING	IP 67 / IEC 529
VIBRATION	10 G / 18-500 Hz
TEMPERATURE RANGE	-40°C TO +85°C
WIRE SECTION (AT NOMINAL LOAD)	MIN. 250 MM²
KEY	NOT REMOVEABLE
MAX TORQUE (MAIN CONTACTS)	18 - 22 Nm

1:2

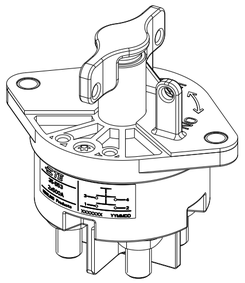

CIRCUIT
Schaltbild

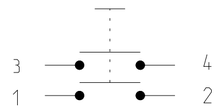

TE ORDER-NO.	REV.	DESCRIPTION	WEIGHT [g]	ITEM NO
K1060657 1	A	BATTERY DISCONNECTOR 2x500A Batterietrennschalter 2x500A	683	1

THIS DRAWING IS A CONTROLLED DOCUMENT.

DIMENSIONS: mm

TOLERANCES UNLESS OTHERWISE SPECIFIED: DIN ISO 2768cL
0 PLC ±
1 PLC ±
2 PLC ±
3 PLC ±
4 PLC ±
ANGLES ±

MATERIAL
FINISH

DWN 16JAN2002 U.Grindemann
CHK 16JAN2002 U.Grindemann
APVD 09SEP2004 N.Mielke
PRODUCT SPEC
APPLICATION SPEC
WEIGHT

TE Connectivity

NAME
BATTERY DISCONNECTOR 2x500A
Batterietrennschalter 2x500A

SIZE	CAGE CODE	DRAWING NO	RESTRICTED TO
A2	00779	C-35-553	-

CUSTOMER DRAWING | SCALE 1:1 | SHEET 1 OF 1 | REV A

1471-9 (3/13)

Downloaded from Arrow.com.