# WRSC Series

## Circular Wireless Charging Coils (Receiving)

Signal's Wireless Circular Charging Coil (WRSC) Series are receiving rectangular wireless charging transmission coils, available in single windings configuration. The WRSC Series allows power to be transmitted wirelessly through inductive coupling to charge an array of products.

The WRSC Series transmitter coils utilize inductive coupling to transfer signals, data and power from one source to another.

The advantages of the WRSC's use of inductive coupling eliminates conductive connections and traditional wiring, seamlessly transferring data and power while avoiding the mechanical abrasion, corrosion and wearing- out of conductive contacts. The fixed-in position inductive coils are non-moving, resistant to vibration and corrosion, and are designed for reliability and longevity.

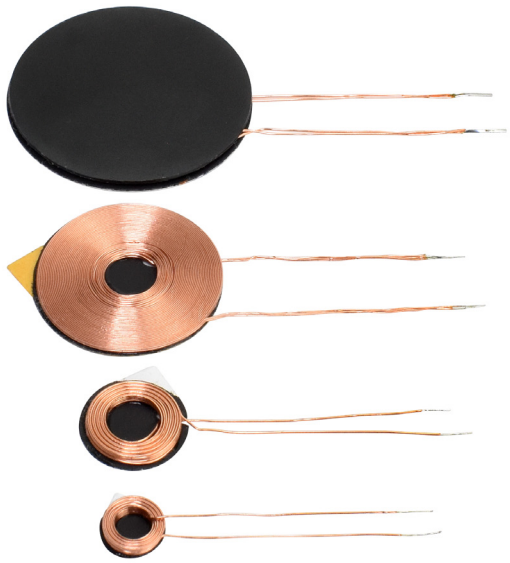

### General Features

- Single coil, three/four layers
- Pin cooling technology and tight pin tolerance control within ±1.0 mm after the tin immersion process
- Inductance tolerance: Rectangular core shape
- Size and shape characteristics are customizable
- Low profile & high mechanical intensity
- Qi standard compliance
- RoHS and REACH compliant

### Specifications

- Impedance range: 11 to 16.7 ohms at 125 kHz
- I sat range: 1.0 to 3.0 A
- Operating Temperature Range: -25 °C to +105 °C
- Storage Temperature Range: -40 °C to +85 °C

### Applications

- Mobile phones, tablets & gaming controllers
- Digital cameras, consumer electronics
- Smart accessories, wearable devices
- Wireless charging devices
- Drones, toothbrushes, robotic cleaners
- Health & fitness

signal TRANSFORMER
a bel group

RoHS Compliant

REACH COMPLIANCE

belfuse.com/signal

Downloaded from Arrow.com.

Please read our datasheet & drawing disclaimer here.

## PRODUCT IDENTIFICATION

W R S C - 13R0 K - 26

(1) (2) (3) (4) (5) (6) (7)

| | | | |
|---|---|---|---|
| (1) | Type: Wireless Charging Coil | (5) | Inductance: 13R0 = 13.0 µH |
| (2) | Location: R = Receiver | (6) | Inductance Tolerance: K: ±10% |
| (3) | Number of Windings: S = Single | (7) | Qi standard code or other |
| (4) | Winding Core Shape: C = Circular | | |

## MECHANICAL SPECIFICATIONS

Dimensions are in mm.

| Part Number | A | B | C * | D | E | F |
|---|---|---|---|---|---|---|
| WRSC-7R2K-32 | 6.0 ± 0.5 | | 2.0 Max | 25.0 ± 2.0 | 2.5 | 5.0 ± 2.0 |
| WRSC-13R0K-26 | 10.5 Max | | 1.7 Max | 25.0 ± 2.0 | 2.0 | 5.0 ± 2.0 |
| WRSC-26R0K-11 | 19.0 ± 0.3 | 5.0 ± 0.3 | 0.8 Max | 25.0 ± 1.0 | 3.0 Ref | 5.0 ± 2.0 |
| WRSC-47R0K-08 | 26.0 ± 0.3 | | 1.31 ± 0.3 | 25.0 ± 1.0 | 3.0 Ref | 5.0 ± 2.0 |

* C size does contain release paper & PET.

### DIMENSIONS

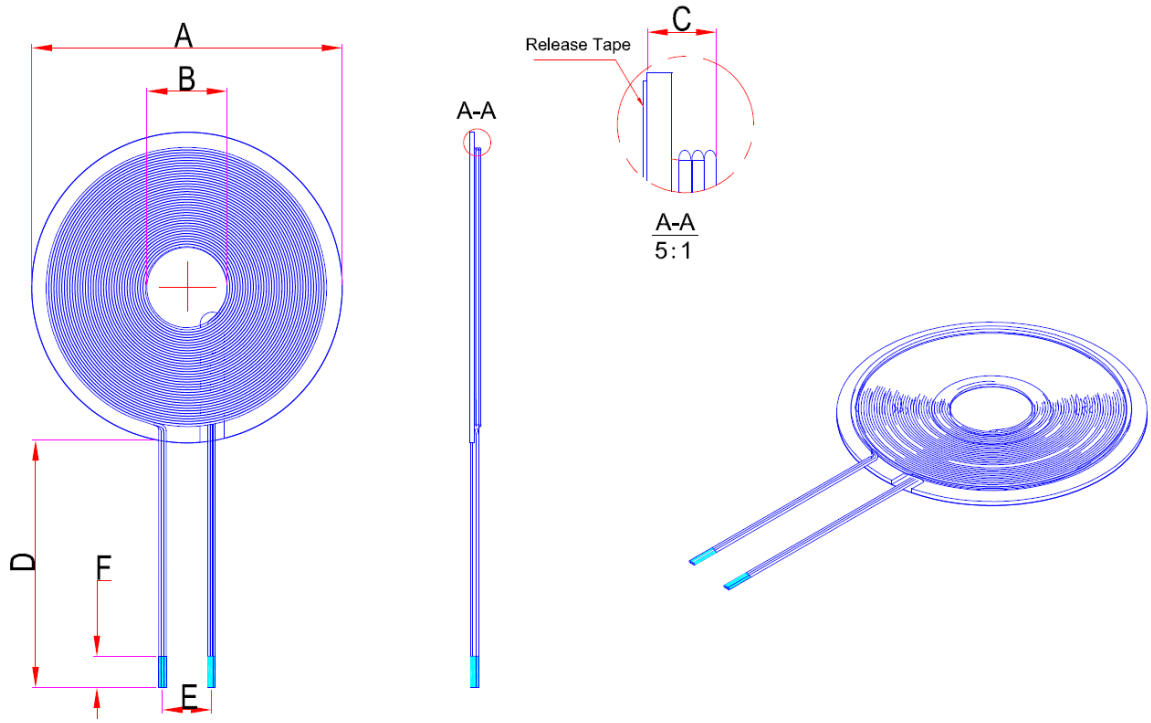


**Custom versions available upon request.**

128 Atlantic Avenue, Lynbrook, NY 11563
Toll Free 866-239-5777 | Tel 516-239-5777 | Fax 516-239-7208
sales@signaltransformer.com | techhelp@signaltransformer.com
belfuse.com/signal

© 2022 Signal Transformer Specifications subject to change without notice. 

Downloaded from Arrow.com.

## ELECTRICAL SPECIFICATIONS

Electrical specifications measured at 25°C / RH 65% unless otherwise stated.

| Part Number | L (± 10%) | DCR (Max) | Q (Typ) | I rms (Max) @ 40°C | Isat (Typ) | Operating Temperature | Test Condition |
|---|---|---|---|---|---|---|---|
| WRSC-7R2K-32 | 7.2 µH | 440 mΩ | 10 | 0.5 A | 1.0 A | -25 to 105°C | 125 kHz / 10 mA |
| WRSC-13R0K-26 | 13.0 µH | 500 mΩ | 17 | 0.8 A | 2.0 A | -25 to 105°C | 125 kHz / 10 mA |
| WRSC-26R0K-11 | 26.0 µH | 520 mΩ | 25 | 1.1 A | 2.0 A | -25 to 105°C | 125 kHz / 10 mA |
| WRSC-47R0K-08 | 47.0 µH | 500 mΩ | 25 | 1.5 A | 3.0 A | -25 to 105°C | 125 kHz / 10 mA |

### COIL ASSEMBLY

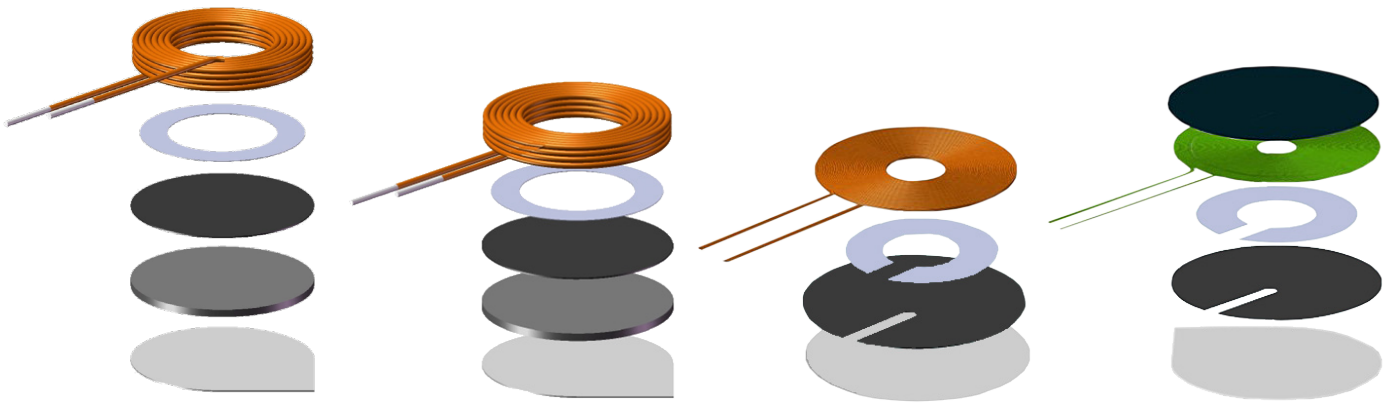

*WRSC-7R2K-32* *WRSC-13R0K-26* *WRSC-26R0K-11* *WRSC-47R0K-08*

**Custom versions available upon request.**

128 Atlantic Avenue, Lynbrook, NY 11563
Toll Free 866-239-5777 | Tel 516-239-5777 | Fax 516-239-7208
sales@signaltransformer.com | techhelp@signaltransformer.com
**belfuse.com/signal**

© 2022 Signal Transformer Specifications subject to change without notice. 

Downloaded from Arrow.com.

## About Signal Transformer

Signal Transformer is known as the world's leader of wire wound magnetic solutions since 1959. With over 50 years of experience manufacturing transformers, chokes, inductors and custom or modified standard products. Signal offers not only the most comprehensive line of certified standard power conversion products, with our vast engineering, manufacturing and regulatory resources; Signal Transformer excels in the design and manufacturer of cost effective, specialized platforms.

**For more information, please contact us:**

128 Atlantic Avenue
Lynbrook, NY 11563

**Toll Free +1 866-239-5777**
Tel +1 516-239-5777
Fax +1 516-239-7208

sales@signaltransformer.com
techhelp@signaltransformer.com

**belfuse.com/signal**


signal TRANSFORMER
a bel group


© 2022 Signal Transformer Specifications subject to change without notice. WRSC Series August 25 2022

Downloaded from Arrow.com.