SERIES: PSK-100 | DESCRIPTION: INTERNAL AC-DC POWER SUPPLY

FEATURES

- EN 60601 3.1 certified
- 4,000 Vac isolation
- 2 MOPP
- adjustable output voltage
- power factor > 90%
- Class I or Class II

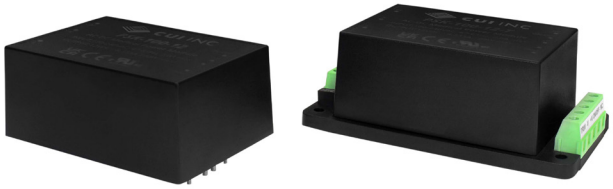

MODEL	output voltage (Vdc)	output current max (A)	output power max (W)	ripple and noise[1] max (mVp-p)	efficiency[2] typ (%)
PSK-100-12	12	8.33	100	160	90
PSK-100-24	24	4.16	100	240	90
PSK-100-48	48	2.08	100	480	90

Note: 1. Ripple and noise are measured at 20 MHz BW with 47 uF aluminum electrolytic capacitor and 0.1 uF ceramic capacitor on the output.
2. At 230 Vac input.

PART NUMBER KEY

PSK-100 - XX- X

- PSK-100: Base Number
- XX: Output Voltage
- X: Mounting Style
  - blank = board mount
  - T = chassis mount

Please read our datasheet & drawing disclaimer here.

Downloaded from Arrow.com.

INPUT

parameter	conditions/description	min	typ	max	units
voltage	(see derating curve)	90		264	Vac
frequency		47		63	Hz
current	at 115 Vac at 230 Vac			2.0 1.0	A A
inrush current	at 115 Vac at 230 Vac			40 70	A A
leakage current	at 264 Vac			0.1	mA
power factor	at 115 Vac, full load at 230 Vac, full load	0.97 0.9			
no load power consumption				0.3	W

OUTPUT

parameter	conditions/description	min	typ	max	units
capacitive load	12 Vdc output 24 Vdc output 48 Vdc output			3,000 1,500 500	µF µF µF
initial set point accuracy	at full load		±2		%
line regulation			±1		%
load regulation	10%~100% load		±1		%
hold-up time	at 115 Vac, 90% output		10		ms
temperature coefficient			±0.05		%/°C
adjustability	with built-in trimpot		±10		%
remote ON/OFF	ON: tie pin 4 (REM) to pin 6 (-Vo) or leave floating OFF: apply +5 Vdc to pin 4 (REM) with respect to pin 6 (-Vo)				

PROTECTIONS

parameter	conditions/description	min	typ	max	units
over voltage protection	auto recovery, hiccup				
over current protection	auto recovery, hiccup				
short circuit protection	level 1 (nominal): continuous, auto recovery level 2 (instantaneous high current): latch				
over temperature protection	latch off				

SAFETY & COMPLIANCE

parameter	conditions/description	min	typ	max	units
isolation voltage	input to output	4,000 5,656			Vac Vdc
	input to PE ground	2,000 2,828			Vac Vdc
	output to PE ground	1,500 2,121			Vac Vdc
safety approvals	certified to 60601: IEC/EN/UL				
safety class	Class I (with PE) and Class II (without PE)				
conducted emission	EN 55011 Class B				
radiated emissions	EN 55011 Class I Class B / Class II Class A				
ESD	IEC/EN61000-4-2				
radiated immunity	IEC/EN61000-4-3				
EFT/burst	IEC/EN61000-4-4				
surge	IEC/EN61000-4-5				

Downloaded from Arrow.com.

SAFETY & COMPLIANCE (CONTINUED)

conducted immunity	IEC/EN61000-4-6		
voltage dips and interruption	IEC/EN61000-4-11		
MTBF	per MIL-HDBK-217F at 25 °C	250,000	hours
RoHS	yes		

ENVIRONMENTAL

parameter	conditions/description	min	typ	max	units
operating temperature	(see derating curve)	-30		70	°C
storage temperature		-30		85	°C
storage humidity		0		95	%

DERATING CURVES

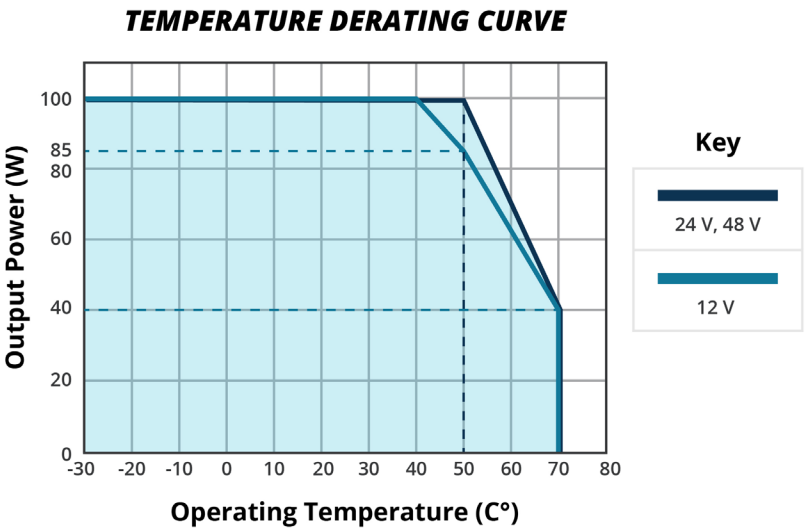

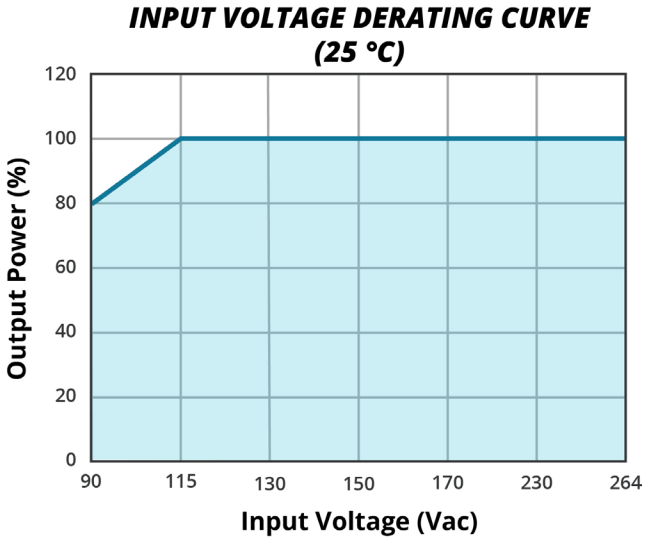

Note: If the input voltage is below 99Vac, it can only be used under the environment of higher that -10°C.

Downloaded from Arrow.com.

MECHANICAL

parameter	conditions/description	min	typ	max	units
dimensions	83.9 x 58.50 x 35.00 (board mount) 111.90 x 64.50 x 40.50 (chassis mount)				mm mm
weight			253		g
cooling	natural convection				

MECHANICAL DRAWING (BOARD MOUNT)

units: mm
general tolerance: ±0.5

PIN CONNECTIONS	
PIN	Function
1	⏚
2	AC (N)
3	AC (L)
4	ON/OFF
5	+Vo
6	-Vo
7	Trim

Note: If the Remote ON/OFF function (pin 4) is not required, tie directly to -Vo (pin 6) or leave floating/open.

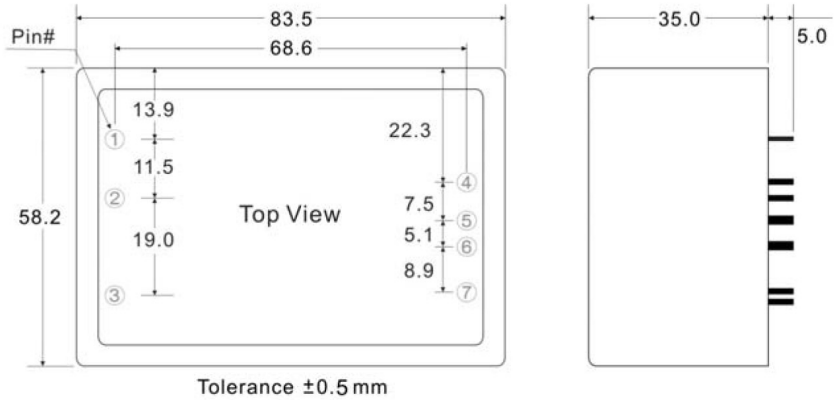

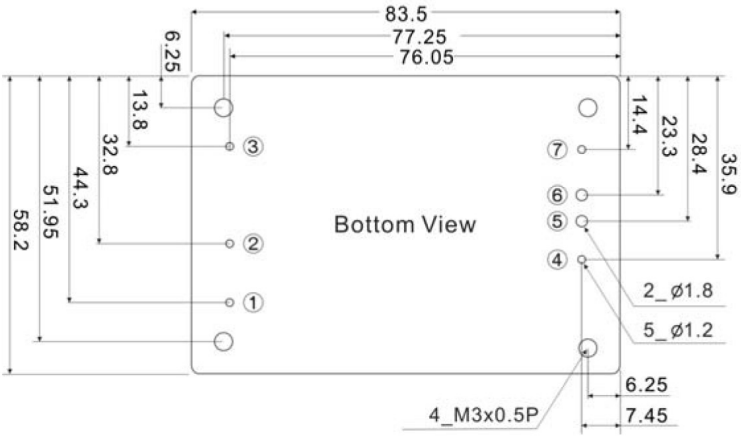

Downloaded from Arrow.com.

MECHANICAL DRAWING (CHASSIS MOUNT)

units: mm
general tolerance: ±0.5

PIN CONNECTIONS	
PIN	Function
1	⏚
2	AC (N)
3	AC (L)
4	ON/OFF
5	+Vo
6	-Vo
7	Trim

Note: If the Remote ON/OFF function (pin 4) is not required, tie directly to -Vo (pin 6) or leave floating/open.

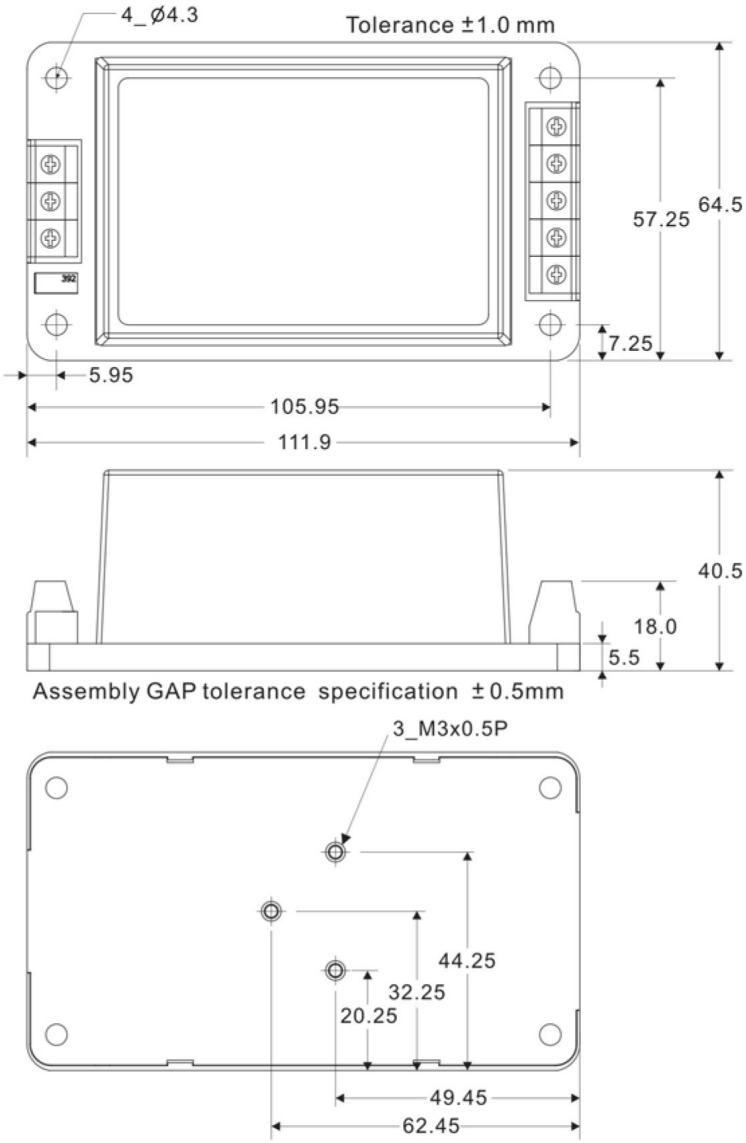

Downloaded from Arrow.com.

BLOCK DIAGRAM

Figure 1

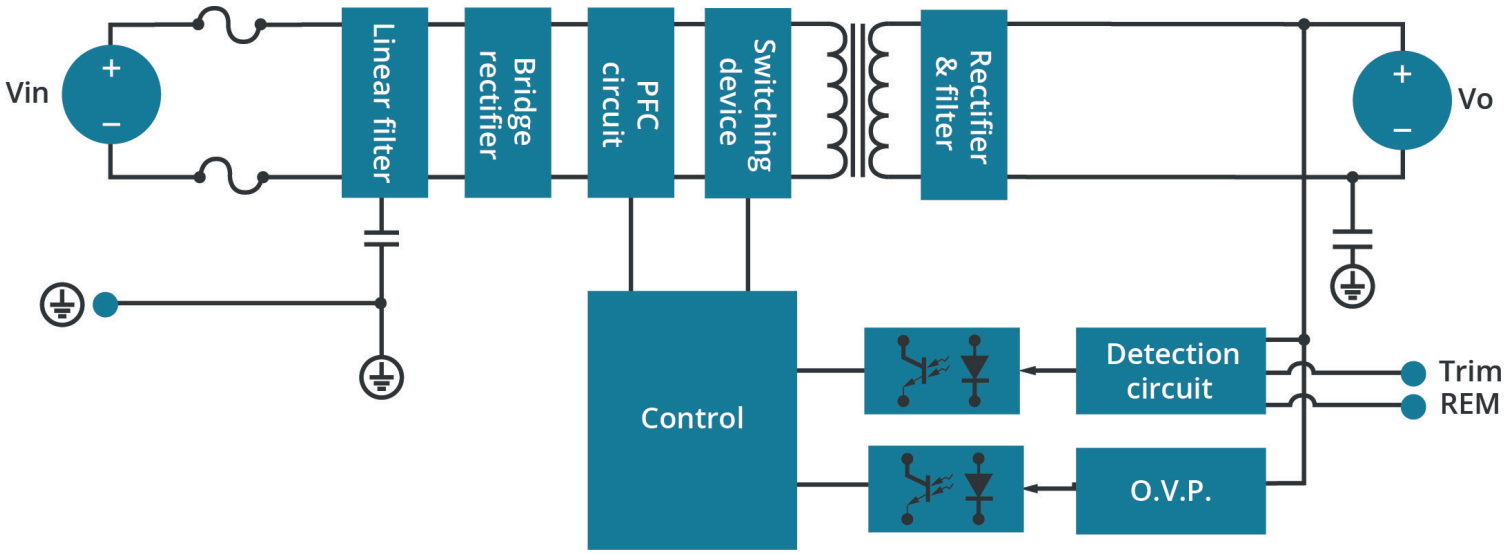

Table 1

Part no.	Trim	-Vo	Trim	+Vo
PSK-100-12	10% / 0%	16KΩ ~ 10M	0% / -10%	10M ~ 45KΩ
PSK-100-24	10% / 0%	17KΩ ~ 10M	0% / -10%	10M ~ 125KΩ
PSK-100-48	10% / 0%	20KΩ ~ 10M	0% / -10%	10M ~ 280KΩ

Downloaded from Arrow.com.

REVISION HISTORY

rev.	description	date
1.0	initial release	12/17/2021
1.01	medical icon added	04/06/2022
1.02	mechanical drawings updated	07/18/2022

The revision history provided is for informational purposes only and is believed to be accurate.

CUI INC
a bel group

Headquarters
20050 SW 112th Ave.
Tualatin, OR 97062
800.275.4899

Fax 503.612.2383
cui.com
techsupport@cui.com

CUI offers a two (2) year limited warranty. Complete warranty information is listed on our website.

CUI reserves the right to make changes to the product at any time without notice. Information provided by CUI is believed to be accurate and reliable. However, no responsibility is assumed by CUI for its use, nor for any infringements of patents or other rights of third parties which may result from its use.

CUI products are not authorized or warranted for use as critical components in equipment that requires an extremely high level of reliability. A critical component is any component of a life support device or system whose failure to perform can be reasonably expected to cause the failure of the life support device or system, or to affect its safety or effectiveness.

Downloaded from Arrow.com.