PRODUCT CATALOG

HIROSE ELECTRIC CO.,LTD.

U.FL Series

1.9mm to 2.4mm Mated Height, Light Weight SMT Micro Coaxial Connector

Compact

RF

Wide Variation

Oct.1.2026 Copyright 2026 HIROSE ELECTRIC CO., LTD. All Rights Reserved.

Product Page
https://www.hirose.com/en/product/series/U.FL

Sep. 2024

Downloaded from Arrow.com.

Features

1. Space-Saving Design

Contribute to small-size of the set.
Mated Height 1.9mm(2.0mm Max.) to
2.4mm(2.5mm Max.)
Receptacle Weight 15.7mg
Substrate Occupied Area 7.7mm^2

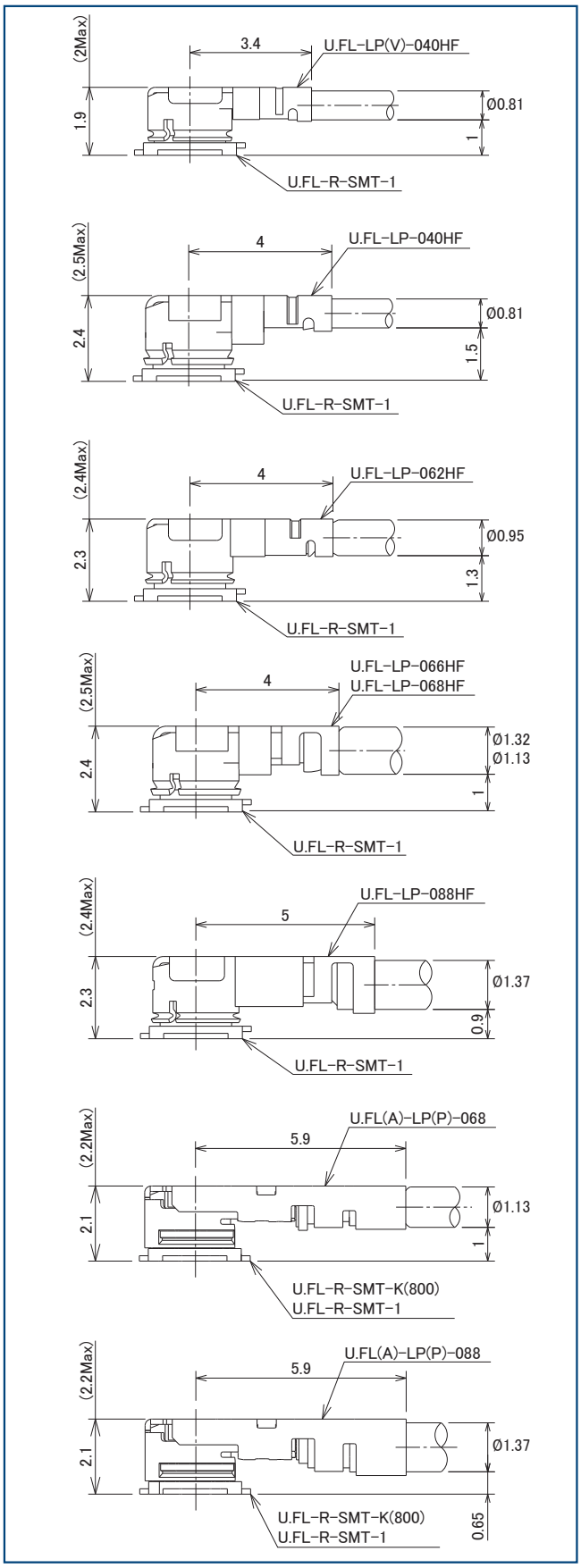

Space-saving factor when mating connectors

Oct.1.2026 Copyright 2026 HIROSE ELECTRIC CO., LTD. All Rights Reserved.

Downloaded from Arrow.com.

2. Solderless Connection Type Available *U.FL(A)

U.FL(A) has expanded its range of frequency to 18 GHz (VSWR less than or equal to 2.0) with a new crimping system (Coa-Fit). Further improvements in workability have been achieved with a shaft displacement prevention design. Receptacle is the same as the conventional soldered product U.FL and can be mated with U.FL-R-SMT-#.

3. RF Performance (up to 18GHz)

The high-frequency characteristics vary depending on the cable, see product specifications chart.
Soldered Products U.FL : Up to 8GHz *Some of up to 12GHz
Solderless Products U.FL(A) : Up to 18GHz

4. Ultra-Fine Coaxial Fluorinated Resin Cables

A wide range of variations can be selected to match the set.
Soldered Products U.FL : φ0.81, φ0.95, φ1.13, φ1.32, φ1.37
Solderless Products U.FL(A) : φ1.13, φ1.37

5. Supports Automatic Mounting

Tape and reel packaging allows for pick & place mounting.

6. Clear, Tactile Lock

Using a special tool allows smooth insertion and removal.

7. Halogen-Free and RoHS2 Compliant

The receptacle and plug do not contain chlorine or bromine above the standard value.
*Defined in accordance with IEC61249-2-21.

8. Harnessable with SMA, MMCX and TNC on One Side

Adapter and harnesses at both ends of this series contribute to flexible board design.

Oct.1.2026 Copyright 2026 HIROSE ELECTRIC CO., LTD. All Rights Reserved.

Downloaded from Arrow.com.

Application

Wireless LAN Equipment (Wi-Fi 6 compatible), Bluetooth Equipment, Car Navigation Systems, Drones, PDAs, GPS, Wireless Communication Devices, Electronic Measuring Instruments, etc.

Product Specifications

Nominal Impedance	50Ω	Operating Temperature	-40 to +105℃ (90% RH Max.)
Rated Frequency	0 to 8GHz	Storage Temperature	-30 to +70℃ (90% RH Max.)

Item	Standards	Condition		
Contact Resistance	Center: 20mΩ Max. (50mΩ Max.) External: 10mΩ Max. (20Ω Max.) (U.FL(A))	Measured at 10 mA Max.		
Insulation Resistance	500MΩ Min.	Measured at 100V DC		
Withstanding Voltage	No insulation break down	200V AC for 1 minute		
V.S.W.R.*	Cable Type	0 to 3GHz	3GHz to 6GHz	6GHz or faster
	U.FL-LP-040HF φ0.81	1.3 Max.	1.35 Max.	6 to 8 GHz: 1.4 Max.
	U.FL-LP(V)-040HF φ0.81	1.3 Max.	1.3 Max.	8 to 12 GHz: 1.4 Max.
	U.FL-LP-068HF φ1.13	1.3 Max.	1.4 Max.	6 to 8 GHz: 1.6 Max.
	U.FL-LP-066HF φ1.32	1.3 Max.	1.5 Max.	6 to 8 GHz: 1.7 Max.
	U.FL-LP-062HF φ0.95	1.3 Max.	1.3 Max.	6 to 8 GHz: 1.4 Max.
	U.FL-LP-088HF φ1.37	1.3 Max.	1.4 Max.	6 to 8 GHz: 1.6 Max.
	U.FL(A)-LP(P)-068 φ1.13	1.3 Max.	1.4 Max.	6 to 9GHz : 1.5 Max. 9 to 12GHz : 1.6 Max. 12 to 15 GHz: 1.7 Max. 15 to 18GHz : 2.0 Max.
	U.FL(A)-LP(P)-088 φ1.37			
Female Contact Retention Force	0.15N Min. /0.1N Min. (062, U.FL(A))	Measured with a pin gauge of φ0.475		
Mating Durability	Contact Resistance : Initial + 5 mΩ	30 times		
Vibration Resistance	No electrical discontinuity of 1μs or more No damage, cracks or part dislocation.	Frequency 10 to 100Hz, Half amplitude 1.5mm, Acceleration 59 m/s^2 for 5 cycles in each of the 3 axes direction.		
Shock Resistance		Acceleration 735 m/s^2, for a duration of 11 ms, sine half-wave waveform, 3 cycles in each of the 6 axes direction.		
Humidity Resistance (Steady State)	Insulation Resistance 10M Min. (in a high humidity environment) 500M Min. (in a dry environment)	96 hours at temperature of 40℃ and humidity of 95%.		
Temperature Cycle	No damage, cracks or part dislocation.	Temperature: -40℃→ +5 to +35℃→ +105℃→ +5 to +35℃ Time: 30 minutes → within 5 minutes → 30 minutes → within 5 minutes. 5 cycles		
Salt Spray	V.S.W.R. Satisfying initial standard values	5% salt water solution for 48 consecutive hours		

Note: Information contained in this catalog represents general requirements for this Series.
Contact us for the drawings and specifications for a specific part number shown.

Oct.1.2026 Copyright 2026 HIROSE ELECTRIC CO., LTD. All Rights Reserved.

Downloaded from Arrow.com.

*V.S.W.R. Measurement System
The above V.S.W.R. standard values were measured using the measurement system shown below

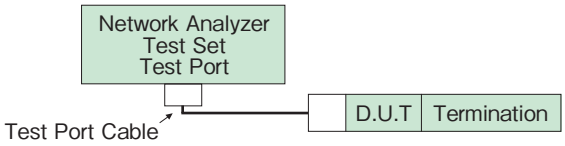

Note 1 : Cable type connectors were measured with SMA conversion adapters attached to both ends of the harness product of a suitable 100cm cable.
Note 2 : Board type connectors were mounted to a 50Ω glass epoxy board and measurements were conducted with SMA conversion adapters attached.

Materials / Finish

	component	Material	Finish/Remarks
Right Angle Plug	Shell	Phosphorous Bronze	Silver Plating/Nickel Plating (Contact Part: Gold Plating) (U.FL (A))
	Insulator	PBT (Gray)	UL94HB (LP(V)-040HF)
		LCP (Milky White)	UL94V-0 (040HF, 066HF, 068HF, 062HF, 088HF)
		LCP (Black)	UL94V-0 (U.FL(A))
	Female Center Contact	Phosphorous Bronze	Gold Plating
Receptacle	Shell	Phosphorous Bronze	Silver Plating (U.FL-R-SMT -1)/Gold Plating (U.FL-R-SMT-K)
	Insulator	LCP (Milky White)	UL94V-0 (U.FL-R-SMT-1)
		LCP (Black)	UL94V-0 (U.FL-R-SMT-K)
	Male Center Contact	Brass	Gold Plating

Oct.1.2026 Copyright 2026 HIROSE ELECTRIC CO., LTD. All Rights Reserved.

Downloaded from Arrow.com.

Product Number Structure

Refer to the chart below when determining the product specifications from the product number.
Please select from the product numbers listed in this catalog when placing orders.

■ Plug

U.FL - 2LPHF6 - 04# 1 TV - A - 100
❶ ❷ ❸ ❹ ❸ ❺

❶ Series Name	U.FL, UFL	❸ Cable Type ● is ❹ Cable Color	04# ● TV : φ 0.81 (for Low Height) 062# ● D : φ 0.95 (Copper Tape Type) 068# ● T : φ 1.13 066# ● : φ 1.32 (Double Shielded Type) 088# ● T : φ 1.37 088 # # PD : φ 1.37 (Copper Tape Type)
❷ Harness type	LPHF6 : Single-Ended Cable (Soldered Product) 2LPHF6: Double-Ended Cable (Soldered Product) LPVHF6 : U.FL-LP(V)-040HF for Single-Ended Cable 2LPVHF6: U.FL-LP(V)-040HF for Double-Ended Cable (LP notation may be omitted.) LPA : Single-Ended Cable (Solderless Connection Type) 2 LPA: Double-Ended Cable (Solderless Connection Type)	❹ Cable Color	φ 0.81 : 1 (White), 2 (Black) Except φ 0.81: 1 (Glay), 2 (Black)
		❺ Total Length L (mm)	Length Units (mm)

■ Receptacle

U.FL - R - SMT - 1 (01)
❶ ❷ ❸ ❹ ❺

❶ Series Name	U.FL	❹ Plating Type	1 : Silver Plating (Shell) K : Gold Plating (Shell)
❷ Connector Type	R : Straight Receptacle	❺ Packing Type	(01) : Bag Packing 100pcs per bag (60) : Reel Packing 4,000pcs per reel (80) : Reel Packing 10,000pcs per reel (800) : Reel Packing 10,000pcs per reel
❸ Board Mounting Method	SMT : Printed Circuit Board Surface Mounting Type		

Oct.1.2026 Copyright 2026 HIROSE ELECTRIC CO., LTD. All Rights Reserved.

Downloaded from Arrow.com.

The Procedure for Ordering Patch Cord

Please select the specifications in 3 steps. No need product name for ordering patch cord.

STEP1 : Specify Double- or Single-Ended

[Double-Ended Cable Assembly]

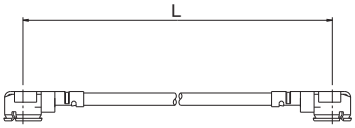

[Single-Ended Cable Assembly]

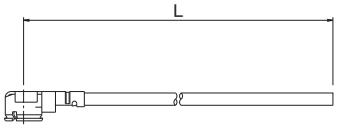

Please consult us for cable terminal finish.

STEP2 : Specify Cable and Mated Height

Cable Outer Diameter	Mated Height (Max.)	Plug
φ 0.81	2.0mm (1.9mm)	U.FL-LP(V)-040HF
	2.4mm (2.5mm)	U.FL-LP-040HF
φ 0.95	2.3mm (2.4mm)	U.FL-LP-062HF
φ 1.13	2.4mm (2.5mm)	U.FL-LP-068HF
φ 1.32	2.4mm (2.5mm)	U.FL-LP-066HF
φ 1.37	2.3mm (2.4mm)	U.FL-LP-088HF
φ 1.37 (Low Transmission Loss)		
φ 1.13	2.1mm (2.2mm)	U.FL(A)-LP(P)-068
φ 1.37		U.FL(A)-LP(P)-088

STEP3 : Specify Cable Length (mm)

●Cable Assembly Total Length Standard Tolerance

Total Length (mm)	Standard Tolerance (mm)
35 ≦ L ≦ 200	± 4
201 < L ≦ 500	± 8
501 < L ≦ 1000	± 12
1000 < L	± 1.5%

Note 1: The shortest length is L=35mm.
Note 2: U.FL(A) is 100 to 1000mm.

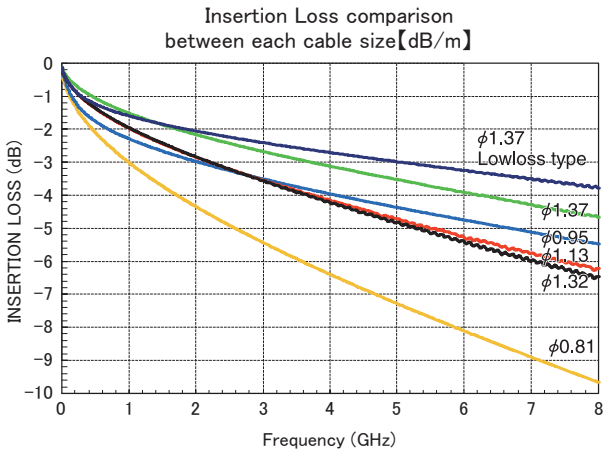

Oct.1.2026 Copyright 2026 HIROSE ELECTRIC CO., LTD. All Rights Reserved.

Downloaded from Arrow.com.

Representative Products according to STEP2

e.g. Double-Ended, Black Harness and 100mm	Color	Features
UFL-2LPVHF6-04N2TV-A-100	Black/White	Low Height
U.FL-2LPHF6-04N2TV-A-100	Black/White	-
U.FL-2LPHF6-062N2D-A-100	Black/Gray	Copper Tape Type
U.FL-2LPHF6-068N2T-A-100	Black/Gray	-
U.FL-2LPHF6-066N2-A-100	Black/Gray	Duble Shielded Type
U.FL-2LPHF6-088N2T-A-100	Black/Gray	-
U.FL-2LPHF6-088N2PD-A-100	Black	Copper Tape Type
UFL-2LPA-068Y2T-A-100	Black/Gray	Solderless Connection Type
UFL-2LPA-088Y2T-A-100	Black/Gray	Solderless Connection Type

Oct.1.2026 Copyright 2026 HIROSE ELECTRIC CO., LTD. All Rights Reserved.

Downloaded from Arrow.com.

Plug

Center Soldered Type

●U.FL Plug

・The center contact is gold plated and the outer contact is silver plated.

Part No. Size	U.FL-LP(V)-040HF	U.FL-LP-040HF
	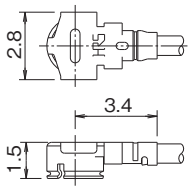	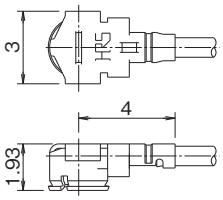
Mated Height	2.0mm Max. (1.9mm Nom.)	2.5mm Max. (2.4mm Nom.)
Applicable Cable	φ 0.81	φ 0.81

Part No. Size	U.FL-LP-062HF	U.FL-LP-066HF U.FL-LP-068HF	U.FL-LP-088HF
	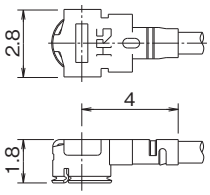	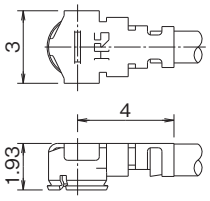	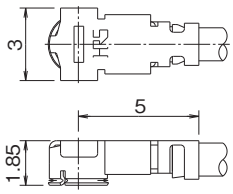
Mated Height	2.4mm Max. (2.3mm Nom.)	2.5mm Max. (2.4mm Nom.)	2.4mm Max. (2.3mm Nom.)
Applicable Cable	φ 0.95	φ 1.13 & φ 1.32	φ 1.37

Note : For plugs, please order according to cable harness specifications.

Oct.1.2026 Copyright 2026 HIROSE ELECTRIC CO., LTD. All Rights Reserved.

Downloaded from Arrow.com.

Solderless Connection Type

●U.FL(A) Plug

・Harness product guarantees frequency up to 18GHz and impedance matching.
・The inner and outer contact portion are gold plated.
(the main body is nickel plated)
・The receptacle can be mated with U.FL-R-SMT-1 (shell : silver plated) and U.FL-R-SMT-K (shell : gold plated).
・The SMA inspection adapter and extraction tool are only for the U.FL(A) plug.
・Controls variation and improves extraction force by 50% compared to conventional products and competing products (Approx. 30N).
It is difficult to remove the connector even when bending the cable.

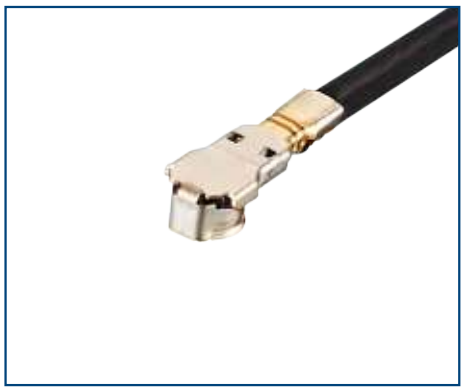

	U.FL(A)-LP(P)-068	U.FL(A)-LP(P)-088
Part No. Size	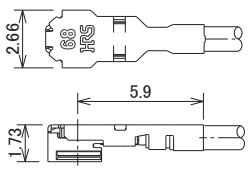	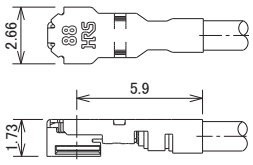
Mated Height	2.2mm Max. (2.1mm Nom.)	
Applicable Cable	φ 1.13	φ 1.37

Note : For plugs, please order according to cable harness specifications.

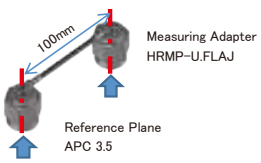

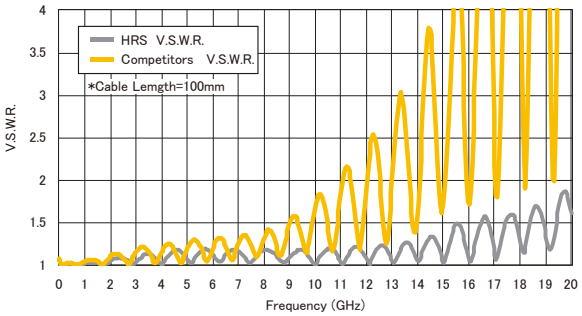

Oct.1.2026 Copyright 2026 HIROSE ELECTRIC CO., LTD. All Rights Reserved.

Downloaded from Arrow.com.

●Cable Guide

Description	Cable Type	Cable Specification							
		Inner Conductor (Note)	Dielectric Diameter	Outer Conductor (Note)	Jacket	Flame Retardant Grade	Nominal Attenuation (dB/m)		
							3GHz	6GHz	8GHz
φ 0.81mm Coaxial Cable	04	7/0.05 SA (AWG#36)	φ 0.40 Fluorine Resin	Single Shield TA	Fluorine Resin	VW-1	6.5	9.5	11.7
φ 1.13mm Coaxial Cable	068	7/0.08 SA (AWG#32)	φ 0.68 Fluorine Resin	Single Shield TA			3.7	5.4	6.5
φ 1.32mm Coaxial Cable	066	7/0.08 SA (AWG#32)	φ 0.66 Fluorine Resin	Double Shield TA			3.8	5.6	6.5
φ 0.95mm Coaxial Cable	062	7/0.071 SA (AWG#33)	φ 0.62 Fluorine Resin	Tape, Single Shield TA			3.1	4.4	5.3
φ 1.37mm Coaxial Cable	088	7/0.102 SA (AWG#30)	φ 0.88 Fluorine Resin	Single Shield TA			2.9	4.3	5
φ 1.37mm Coaxial Cable (Low Loss)	088	7/0.102 SA (AWG#30)	φ 0.88 Fluorine Resin	Tape, Single Shield TA			2.5	3.4	3.8

(Attenuation is a reference value.)
Note : SA : Silver Plating Annealed Copper Wire, TA : Tin Plating Annealed Copper Wire

U.FL(A) Inspection SMA Conversion Adapter

●Mated Portion: U.FLA Jack- SMA Plug

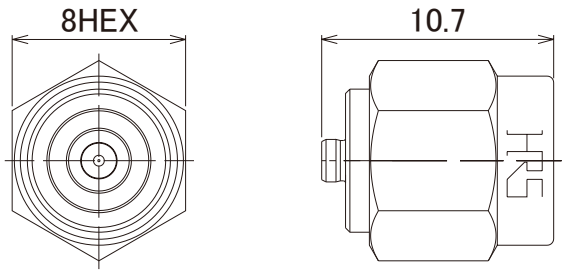

Part No.	HRS No.	Purchase Unit
HRMP-U.FLAJ	CL0311-2400-0-00	20pcs per bag

Note: Since the U.FL side mated portion has a weaker lock than standard products, it cannot be used for purposes other than performance measurement.

Oct.1.2026 Copyright 2026 HIROSE ELECTRIC CO., LTD. All Rights Reserved.

Downloaded from Arrow.com.

Receptacle

●Shell : Silver Plated

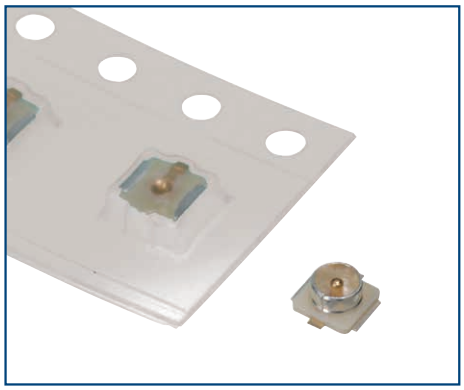

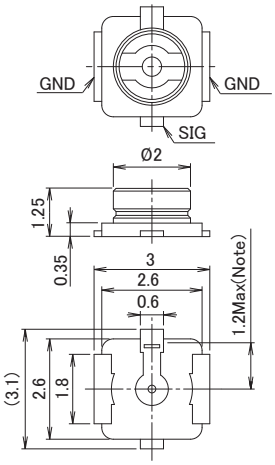

Part No	HRS No.	Purchase Unit
U.FL-R-SMT-1(01)	CL0331-0472-2-01	100pcs per bag
U.FL-R-SMT-1(60)	CL0331-0472-2-60	4,000pcs per reel
U.FL-R-SMT-1(80)	CL0331-0472-2-80	10,000pcs per reel

Note: Tolerance value of mold resin applied to center contact.

■Recommended PCB Mounting Pattern

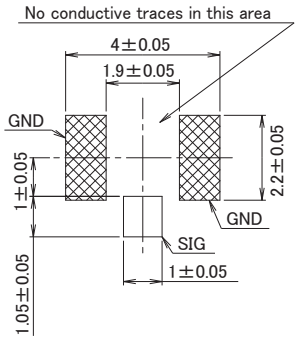

■Recommended Metal Mask Dimensions

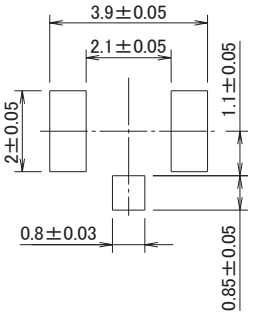

Metal Mask Thickness : 0.1mm/0.12mm

Oct.1.2026 Copyright 2026 HIROSE ELECTRIC CO., LTD. All Rights Reserved.

Downloaded from Arrow.com.

●Shell : Gold Plated

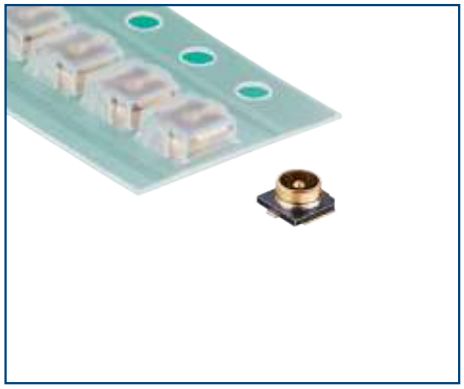

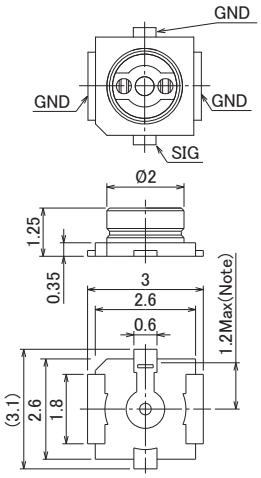

Part No.	HRS No.	Purchase Unit
U.FL-R-SMT-K(800)	CL0480-0761-0-00	10,000pcs per reel

Note: Tolerance value of mold resin applied to center contact.

■Recommended PCB Mounting Pattern & Metal Mask Dimensions

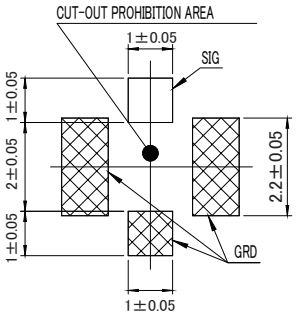

Metal Mask Thickness : 0.1mm

Oct.1.2026 Copyright 2026 HIROSE ELECTRIC CO., LTD. All Rights Reserved.

Downloaded from Arrow.com.

●Embossed Carrier Tape Dimensions(IEC60286 Compliant)

U.FL-R-SMT-1(60): 8mm pitch

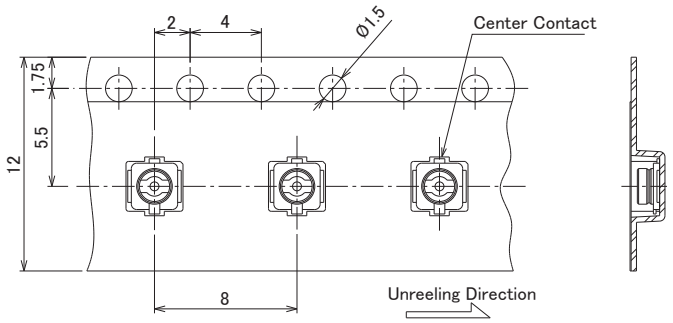

U.FL-R-SMT-1(80), U.FL-R-SMT-K(800): 4mm pitch

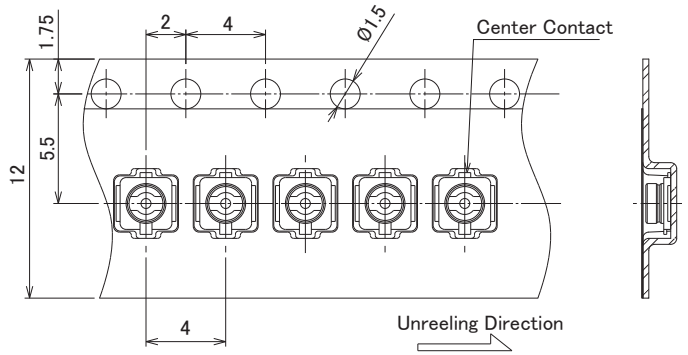

●Reel Dimensions

Material: PS(Black) U.FL-R-SMT-1
PS(White) U.FL-R-SMT-K

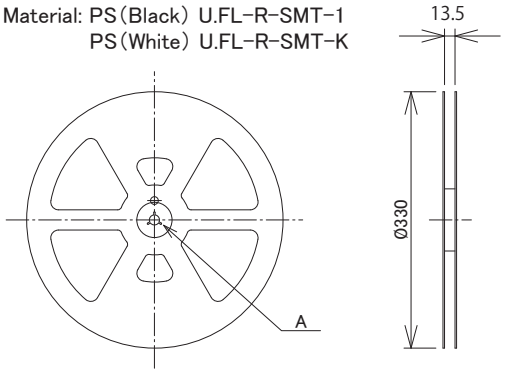

A(SCALE FREE)

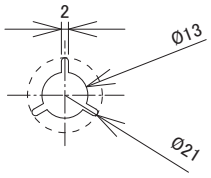

Oct.1.2026 Copyright 2026 HIROSE ELECTRIC CO., LTD. All Rights Reserved.

Downloaded from Arrow.com.

Conversion Adapter

● SMA Conversion Adapter (Mated Portion : UFL Jack - SMA Plug)

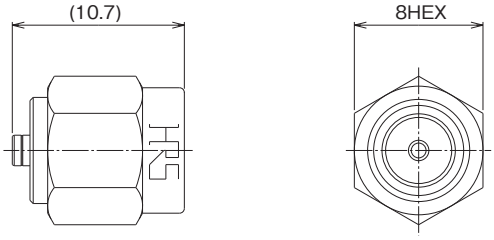

Part No.	HRS No.	Purchase Unit
HRMP-U.FLJ(40)	CL0311-0300-2-40	20pcs per bag

Note: Due the strength of the U.FL side mate portion vs. standard products, it cannot be used for purposes other than performance measurement.

● SMA Conversion Adapter (Mated Portion : U.FL Plug - SMA Jack)

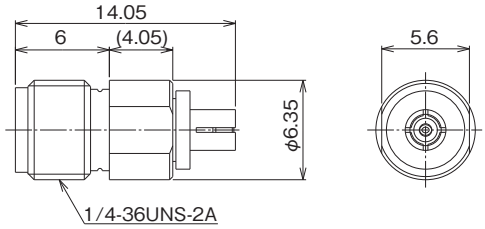

Part No.	HRS No.	Purchase Unit
HRMJ-U.FLP(40)	CL0311-0301-5-40	20pcs per bag

Note: Since the U.FL side mated portion has a weaker lock than standard products, it cannot be used for purposes other than performance measurement.

● SMA Conversion Adapter (Mated Portion : U.FL Plug (without Lock) - SMA Jack)

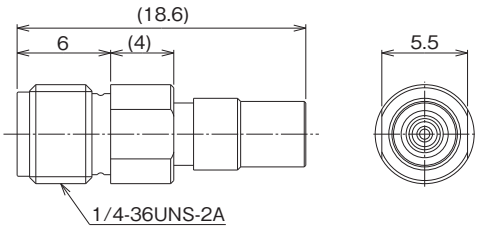

Part No.	HRS No.	Purchase Unit
HRMJ-U.FLP-ST1(40)	CL0311-0385-5-40	20pcs per bag

Note: This connector is used by pressing the mated portion of the U.FL side with the mated portion of U.FL-R-SMT-1.

Oct.1.2026 Copyright 2026 HIROSE ELECTRIC CO., LTD. All Rights Reserved.

Downloaded from Arrow.com.

Oct.1.2026 Copyright 2026 HIROSE ELECTRIC CO., LTD. All Rights Reserved.

● SMA Conversion Adapter (Mated Portion: SMA Jack (Measuring Device Connection Side) -SMA Plug)

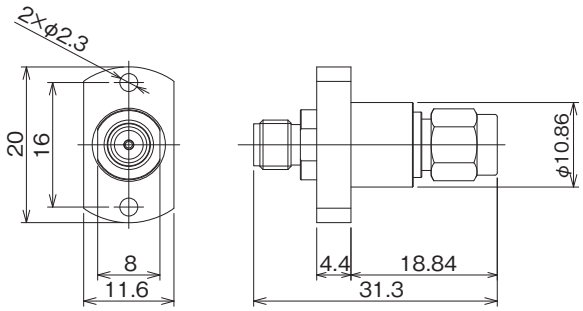

Part No.	HRS No.	Purchase Unit
HRM-PA-PJ(F)-1(40)	CL0323-0805-9-40	20pcs per bag

Note: HRMJ-U.FLP-ST1 absorbs misalignment when mated with the plug (coupling side) and connecting the jack with the measuring device.

●Probe for Inspect of Multiple Narrow Pitch Receptacles (Mated Portion : U.FL Plug (without Lock) - ML51 Jack)

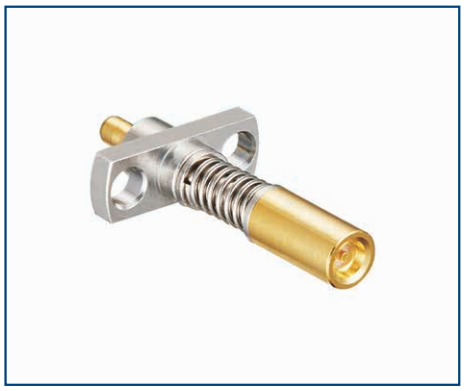

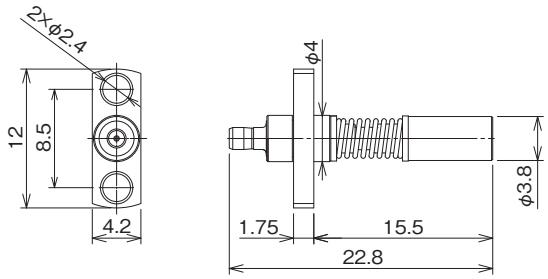

Part No.	HRS No.	Purchase Unit
U.FLP-ML51.J-PA(F)-ST	CL0311-0466-8-00	20pcs per bag

Note: Hirose's ML51 is used for the measuring device interface. It is ideal for simultaneous inspection of multiple narrow pitch mounted receptacles.

●Harness for Narrow Pitch Probe Connection (Mated Portion : SMA Plug (Measuring Device Connection Side) - ML51 Plug)

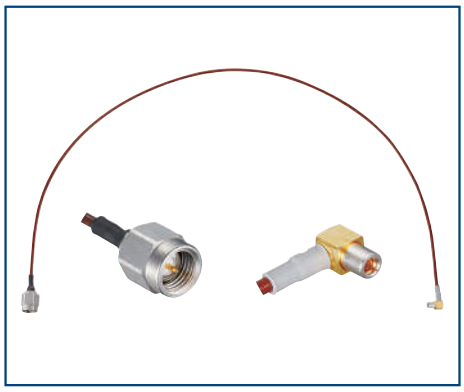

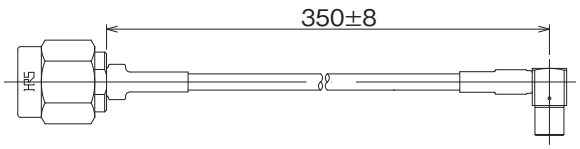

Part No.	HRS No.	Purchase Unit
HRMP-ML51LP-DTR178-350RS	CL0321-4926-2-01	10pcs per bag

Note: Used to connect U.FLP-ML51J-PA(F)-ST and the measuring device. It is recommended to provide slack to the cable length so that it can absorb misalignment smoothly.

Downloaded from Arrow.com.

Inspection Probe Combination and Usage

● HRMJ-U.FLP-ST1 and HRM-PA-PJ(F)1

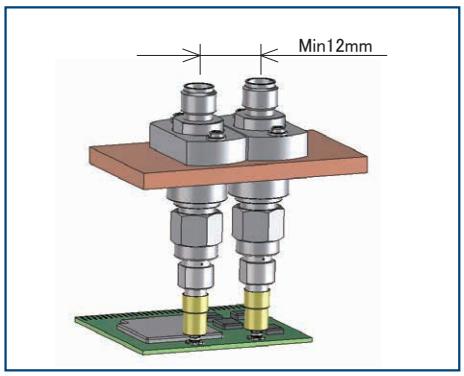

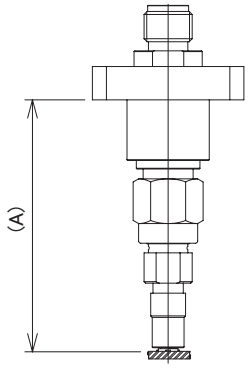

Shortest Pitch for Adjacency

Flange to Board Surface	(A)
Recommendation for Measurement	32.5 ± 0.2
Starting Load	33.2

● U.FLP-ML51.J-PA(F)-ST and HRMP-ML51LP-DTR178-350RS

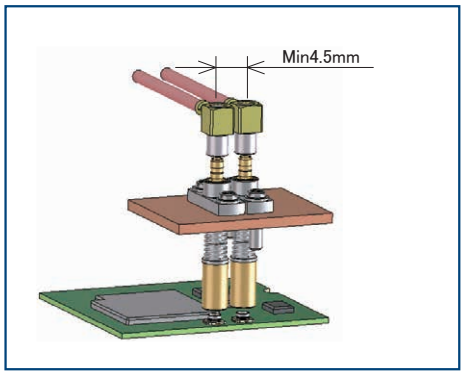

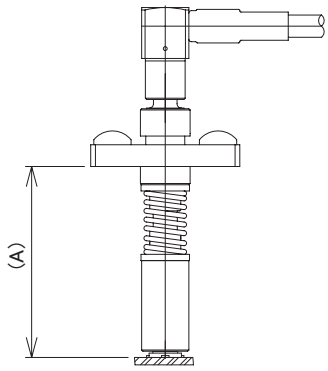

Shortest Pitch for Adjacency

Flange to Board Surface	(A)
Recommendation for Measurement	15.1 ± 0.2
Starting Load	16

Note: For the inspection probe do not tilt the tip contact from the tensile load of the connecting cable.

Oct.1.2026 Copyright 2026 HIROSE ELECTRIC CO., LTD. All Rights Reserved.

Downloaded from Arrow.com.

Oct.1.2026 Copyright 2026 HIROSE ELECTRIC CO., LTD. All Rights Reserved.

Inspection Receptacle

Receptacle for inspecting the conduction and withstanding voltage of harness products.

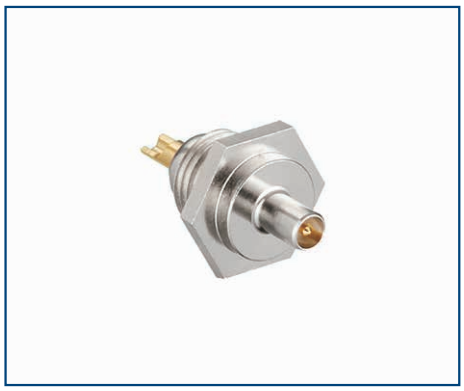

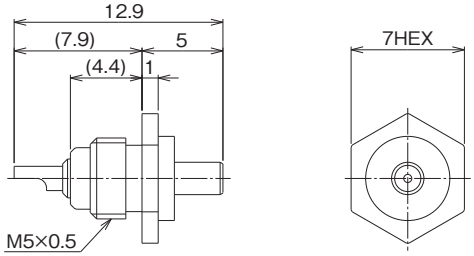

Part No.	HRS No.	Purchase Unit
U.FL-R-1	CL0331-0466-0-00	20pcs per bag

Note: Product cannot be used for purposes other than conduction or withstanding voltage inspection because there is no lock on the mating portion.

Inspection Assistance Tool

●SMA Mating Push On Conversion Adapter

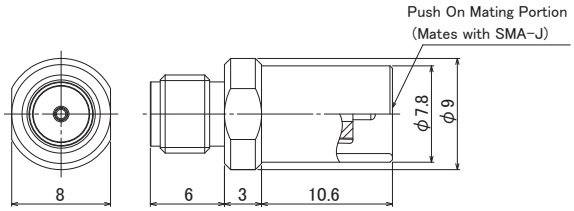

Part No.	HRS No.	Purchase Unit
HRMP(PO)-HRMJ	CL0323-0741-8-00	20pcs per bag

Note: Converts SMA plug mating portion to push on type, reducing the number of steps required for repeated SMA mating.

Downloaded from Arrow.com.

Standard Connectors that Connect with U.FL SMA Cable Type

●Straight Plug

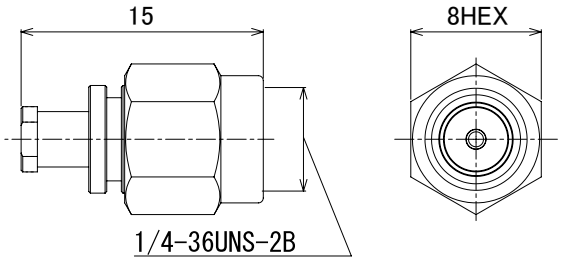

Part No.	HRS No.	Applicable Cable	Remarks	Purchase Unit
HRM-200-040PBN(40)	CL0323-0790-3-40	φ 0.81	SMA (Male Contact)	20pcs per bag
HRM-200-066PBN(40)	CL0323-0791-6-40	φ 1.13, φ 1.32		
HRM-200-088PBN(40)	CL0323-0800-5-40	φ 1.37		

●Straight Jack

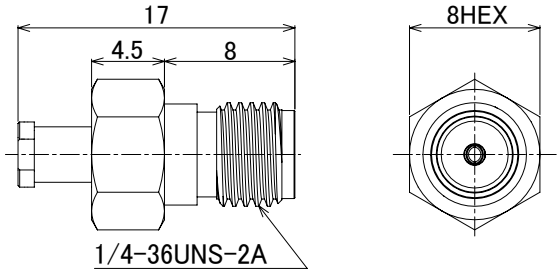

Part No.	HRS No.	Applicable Cable	Remarks	Purchase Unit
HRM-200-040JBN(40)	CL0323-0792-9-40	φ 0.81	SMA (Female Contact)	20pcs per bag
HRM-200-066JBN(40)	CL0323-0793-1-40	φ 1.13, φ 1.32		
HRM-200-088JBN(40)	CL0323-0801-8-40	φ 1.37		

Oct.1.2026 Copyright 2026 HIROSE ELECTRIC CO., LTD. All Rights Reserved.

Downloaded from Arrow.com.

●Panel Jack (4 Screws Type)

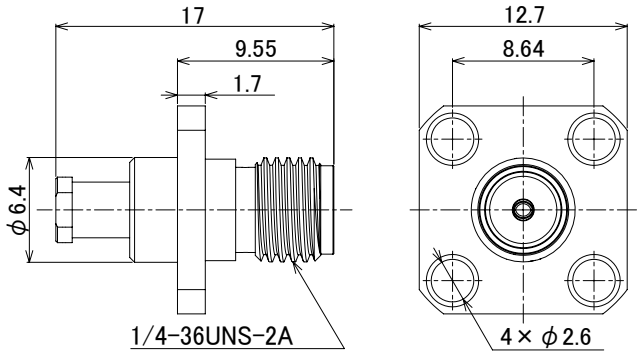

Part No.	HRS No.	Applicable Cable	Remarks	Purchase Unit
HRM-200-040PJ4BN(40)	CL0323-0795-7-40	φ0.81	SMA (Female Contact)	20pcs per bag
HRM-200-066PJ4BN(40)	CL0323-0796-0-40	φ1.13, φ1.32		
HRM-200-088PJ4BN(40)	CL0323-0803-3-40	φ1.37		

●Panel Jack (2 Screws Type)

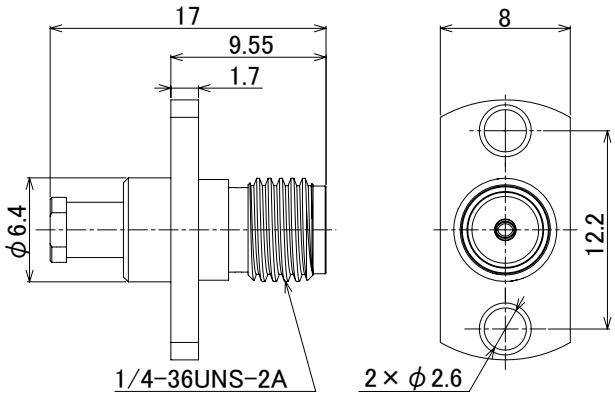

Part No.	HRS No.	Applicable Cable	Remarks	Purchase Unit
HRM-200-040PJ2BN(40)	CL0323-0794-4-40	φ0.81	SMA (Female Contact)	20pcs per bag
HRM-200-066PJ2BN(40)	CL0323-0788-1-40	φ1.13, φ1.32		
HRM-200-088PJ2BN(40)	CL0323-0802-0-40	φ1.37		

Oct.1.2026 Copyright 2026 HIROSE ELECTRIC CO., LTD. All Rights Reserved.

Downloaded from Arrow.com.

●Panel Jack (Nut Type)

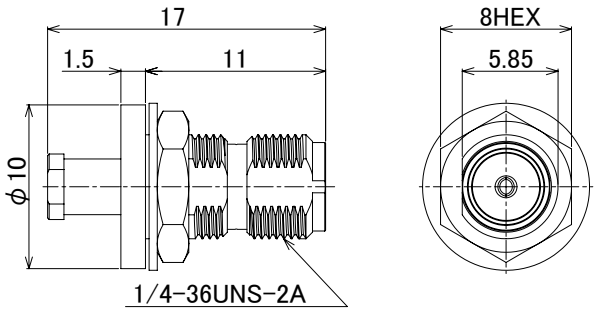

Part No.	HRS No.	Applicable Cable	Remarks	Purchase Unit
HRM-200-040BPJBN(40)	CL0323-0797-2-40	ϕ 0.81	SMA (Female Contact)	20pcs per bag
HRM-200-066BPJBN(40)	CL0323-0798-5-40	ϕ 1.13, ϕ 1.32		
HRM-200-088BPJBN(40)	CL0323-0804-6-40	ϕ 1.37		

■Mounting Hole Dimension

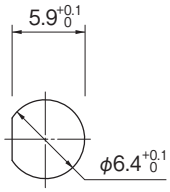

●Panel Jack (Nut Type, Flange Part Water Proofing)

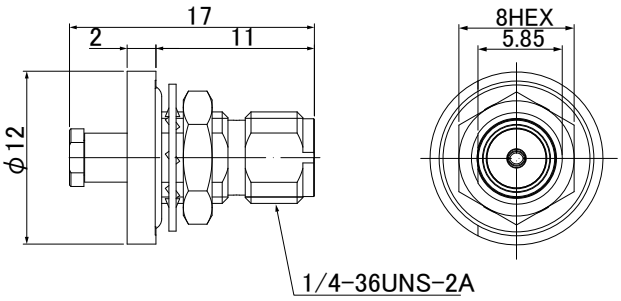

Part No.	HRS No.	Applicable Cable	Remarks	Purchase Unit
HRM-200-040WBPJBN	CL0323-0945-8-00	ϕ 0.81	SMA (Female Contact)	20pcs per bag
HRM-200-066WBPJBN	CL0323-0946-0-00	ϕ 1.13, ϕ 1.32		
HRM-200-088WBPJBN	CL0323-0920-7-00	ϕ 1.37		

■Mounting Hole Dimension

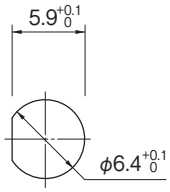

Oct.1.2026 Copyright 2026 HIROSE ELECTRIC CO., LTD. All Rights Reserved.

Downloaded from Arrow.com.

SMA-U.FL Cable Assembly Representative Product

●SMA Straight Plug - U.FL Plug

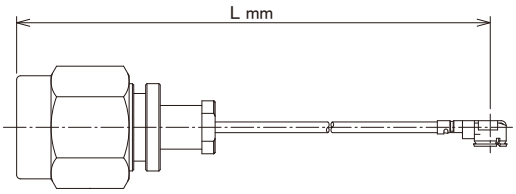

Part No.	HRS No.	Cable (Color)	L mm	Remarks
HRMP-UFLHF6-04N2TV-A200RS	CL0321-0753-0-04	φ 0.81 (Black)	200 ± 4	SMA (Male Contact)
HRMP-UFLHF6-068N2T-A200RS	CL0321-0854-0-02	φ 1.13 (Black)		
HRMP-UFLHF6-066N2-A200RS	CL0321-0862-0-05	φ 1.32 (Black)		
HRMP-UFLHF6-088N2T-A200RS	CL0321-0755-0-07	φ 1.37 (Black)		

●SMA Straight Jack - U.FL Plug

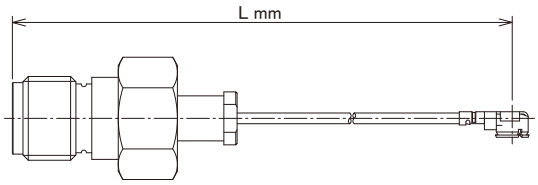

Part No.	HRS No.	Cable (Color)	L mm	Remarks
HRMJ-UFLHF6-04N2TV-A200RS	CL0321-0881-0-02	φ 0.81 (Black)	200 ± 4	SMA (Female Contact)
HRMJ-UFLHF6-068N2T-A200RS	CL0321-0869-0-03	φ 1.13 (Black)		
HRMJ-UFLHF6-066N2-A200RS	CL0321-0868-0-02	φ 1.32 (Black)		
HRMJ-UFLHF6-088N2T-A200RS	CL0321-0904-0-04	φ 1.37 (Black)		

●SMA Panel Jack (4 Screws Type) - U.FL Plug

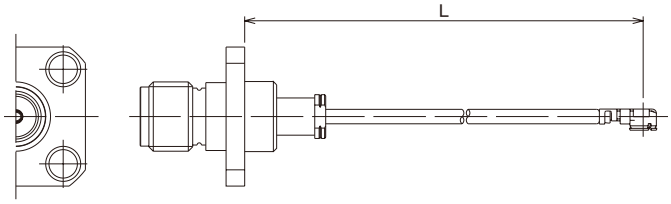

Part No.	HRS No.	Cable (Color)	L mm	Remarks
HPJ-UFLHF6-04N2TV-A200RS	CL0321-0965-0-02	φ 0.81 (Black)	200 ± 4	SMA (Female Contact)
HPJ-UFLHF6-068N2T-A200RS	CL0321-3660-0-02	φ 1.13 (Black)		
HPJ-UFLHF6-066N2-A200RS	CL0321-0905-0-01	φ 1.32 (Black)		
HPJ-UFLHF6-088N2T-A200RS	CL0321-0911-0-03	φ 1.37 (Black)		

Oct.1.2026 Copyright 2026 HIROSE ELECTRIC CO., LTD. All Rights Reserved.

Downloaded from Arrow.com.

●SMA Panel Jack (2 Screws Type) - U.FL Plug

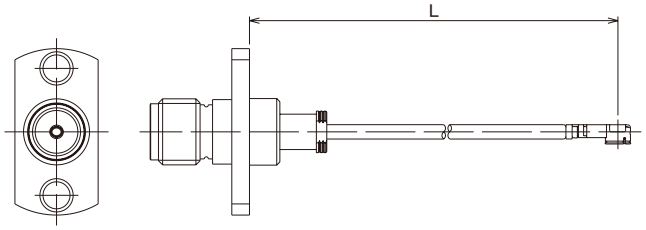

Part No.	HRS No.	Cable (Color)	L mm	Remarks
HPJ2-UFLHF6-04N2TV-A200RS	CL0321-0969-0-03	φ 0.81 (Black)	200 ± 4	SMA (Female Contact)
HPJ2-UFLHF6-068N2T-A200RS	CL0321-1083-0-03	φ 1.13 (Black)		
HPJ2-UFLHF6-066N2-A200RS	CL0321-1084-0-03	φ 1.32 (Black)		
HPJ2-UFLHF6-088N2T-A200RS	CL0321-0812-0-04	φ 1.37 (Black)		

●SMA Panel Jack (Nut Type) - U.FL Plug

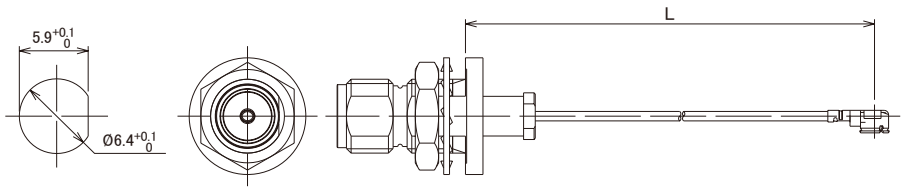

Part No.	HRS No.	Cable (Color)	L mm	Remarks
HBPJ-UFLHF6-04N2TV-A200RS	CL0321-0964-0-02	φ 0.81 (Black)	200 ± 4	SMA (Female Contact)
HBPJ-UFLHF6-068N2T-A200RS	CL0321-3781-0-02	φ 1.13 (Black)		
HBPJ-UFLHF6-066N2-A200RS	CL0321-0927-0-03	φ 1.32 (Black)		
HBPJ-UFLHF6-088N2T-A200RS	CL0321-0926-0-03	φ 1.37 (Black)		

● Panel Jack (Nut Type, Flange Part Water Proofing) - U.FL Plug

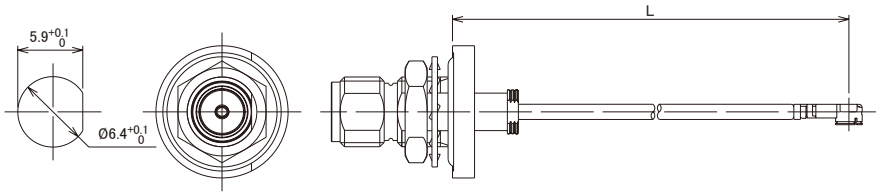

Part No.	HRS No.	Cable (Color)	L mm	Remarks
HWBPJ-UFLHF6-04N2TV-A200	CL0321-3833-0-02	φ 0.81 (Black)	200 ± 4	SMA (Female Contact)
HWBPJ-UHF6-068N2T-A-200	CL0321-1235-0-03	φ 1.13 (Black)		
HWBPJ-UFLHF6-066N2-A-200	CL0321-3790-0-02	φ 1.32 (Black)		
HWBPJ-UFLHF6-088N2T-A200	CL0321-0760-0-04	φ 1.37 (Black)		

Note : For cable lengths, cable colors, and connector combinations other than those listed above, please contact us.

Oct.1.2026 Copyright 2026 HIROSE ELECTRIC CO., LTD. All Rights Reserved.

Downloaded from Arrow.com.

Standard Connectors that Connect with U.FL SMA(R) Cable Type

●Straight Plug

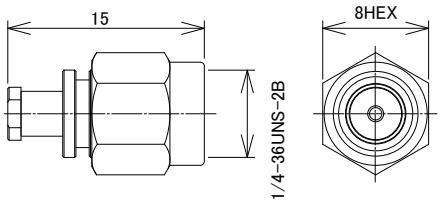

Part No.	HRS No.	Applicable Cable	Remarks	Purchase Unit
SMA(R)-200-040PBN	CL0323-0925-0-00	φ 0.81	SMA Reverse (Female Contact)	20pcs per bag
SMA(R)-200-066PBN	CL0323-0930-0-00	φ 1.13, φ 1.32		
SMA(R)-200-088PBN	CL0323-0905-3-00	φ 1.37		

●Straight Jack

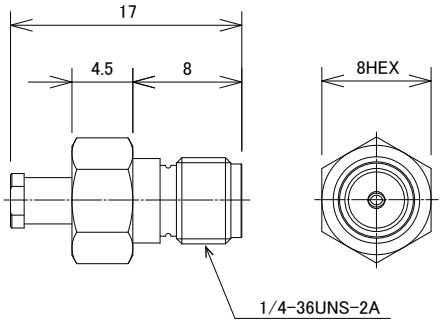

Part No.	HRS No.	Applicable Cable	Remarks	Purchase Unit
SMA(R)-200-040JBN	CL0323-0926-3-00	φ 0.81	SMA Reverse (Male Contact)	20pcs per bag
SMA(R)-200-066JBN	CL0323-0931-3-00	φ 1.13, φ 1.32		
SMA(R)-200-088JBN	CL0323-0904-0-00	φ 1.37		

●Panel Jack (4 Screws Type)

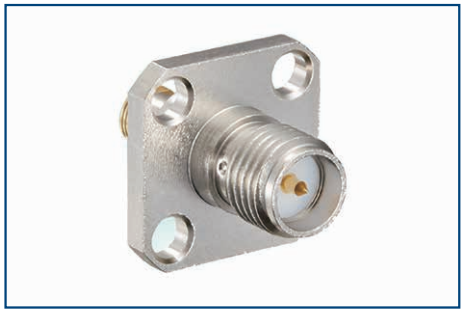

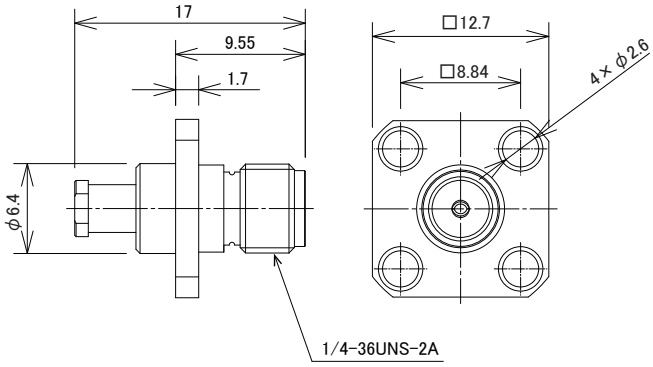

Part No.	HRS No.	Applicable Cable	Remarks	Purchase Unit
SMA(R)-200-040PJ4BN	CL0323-0928-9-00	φ 0.81	SMA Reverse (Male Contact)	20pcs per bag
SMA(R)-200-066PJ4BN	CL0323-0932-6-00	φ 1.13, φ 1.32		
SMA(R)-200-088PJ4BN	CL0323-0934-1-00	φ 1.37		

Oct.1.2026 Copyright 2026 HIROSE ELECTRIC CO., LTD. All Rights Reserved.

Downloaded from Arrow.com.

●Panel Jack (2 Screws Type)

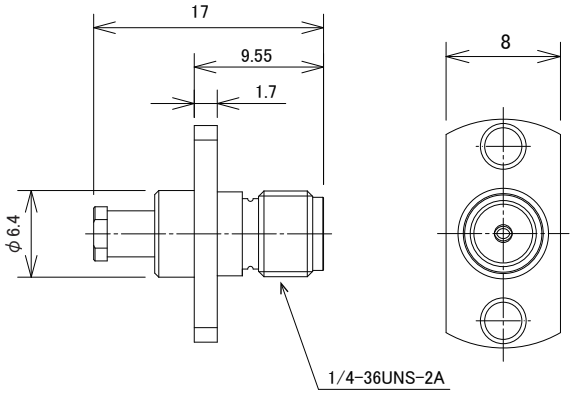

Part No.	HRS No.	Applicable Cable	Remarks	Purchase Unit
SMA(R)-200-040PJ2BN	CL0323-0929-1-00	φ 0.81	SMA Reverse (Male Contact)	20pcs per bag
SMA(R)-200-066PJ2BN	CL0323-0933-9-00	φ 1.13, φ 1.32		
SMA(R)-200-088PJ2BN	CL0323-0935-4-00	φ 1.37		

●Panel Jack (Nut Type)

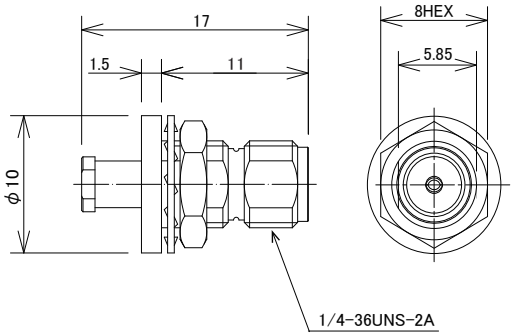

Part No.	HRS No.	Applicable Cable	Remarks	Purchase Unit
SMA(R)-200-040BPJBN	CL0323-0927-6-00	φ 0.81	SMA Reverse (Male Contact)	20pcs per bag
SMA(R)-200-066BPJBN	CL0323-0902-5-00	φ 1.13, φ 1.32		
SMA(R)-200-088BPJBN	CL0323-0901-2-00	φ 1.37		

■Mounting Hole Dimension

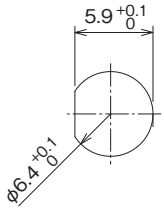

Oct.1.2026 Copyright 2026 HIROSE ELECTRIC CO., LTD. All Rights Reserved.

Downloaded from Arrow.com.

●Panel Jack (Nut Type, Flange Part Water Proofing)

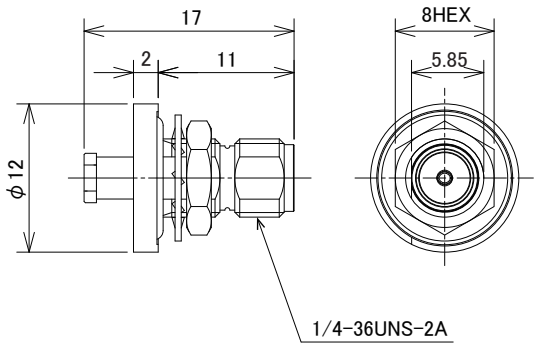

Part No.	HRS No.	Applicable Cable	Remarks	Purchase Unit
SMA(R)-200-040WBPJBN	CL0323-0947-3-00	ϕ 0.81	SMA Reverse (Male Contact)	20pcs per bag
SMA(R)-200-066WBPJBN	CL0323-0948-6-00	ϕ 1.13, ϕ 1.32		
SMA(R)-200-088WBPJBN	CL0323-0949-9-00	ϕ 1.37		

■Mounting Hole Dimension

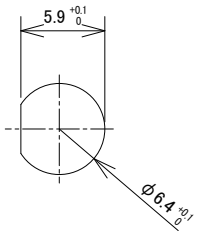

Standard Connectors that Connect with U.FL TNC Cable Type

●Panel Jack (Nut, Waterproof Panel Mounting Surface Type)

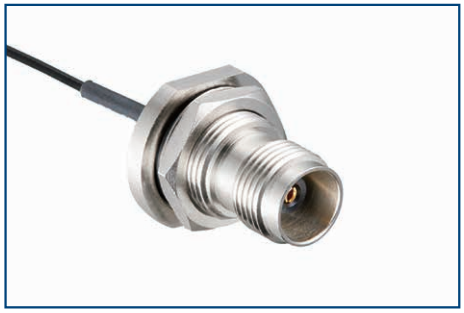

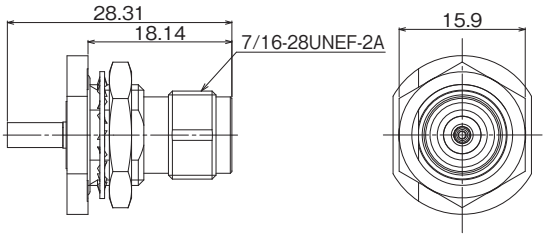

Part No.	HRS No.	Applicable Cable
TNC-WBPJ-088-1	CL0313-0004-0-00	ϕ 1.37

Note: Please order the product after designating the harness specifications including product length, etc.

■Mounting Hole Dimension

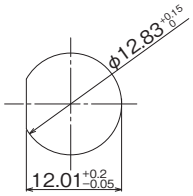

Oct.1.2026 Copyright 2026 HIROSE ELECTRIC CO., LTD. All Rights Reserved.

Downloaded from Arrow.com.

Standard Connectors that Connect with U.FL TNC(R) Cable Type

●Panel Jack (Nut, Waterproof Panel Mounting Surface Type)

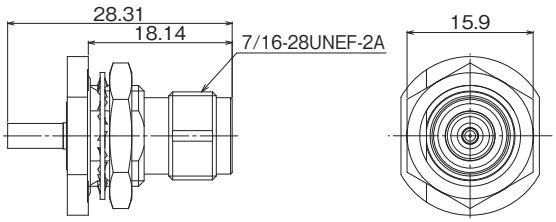

Part No.	HRS No.	Applicable Cable
TNC(R)-WBPJ-088	CL0313-0003-0-00	φ 1.37

Note: Please order the product after designating the harness specifications including product length, etc.

■Mounting Hole Dimension

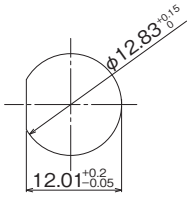

Oct.1.2026 Copyright 2026 HIROSE ELECTRIC CO., LTD. All Rights Reserved.

Downloaded from Arrow.com.

Standard Connectors that Connect with U.FL SMA Adapter Type

●Panel Adapter (4 Screws Type)

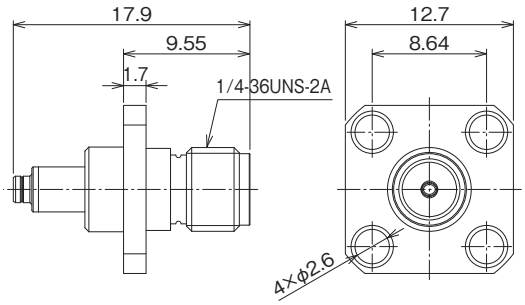

Part No.	HRS No.	Remarks	Purchase Unit
HRMJ-U.FLJ-PA4	CL0311-0465-2-00	SMA (Female Contact)	20pcs per bag

Note: Please avoid mating with the U.FL(A) plug.

●Panel Adapter (2 Screws Type)

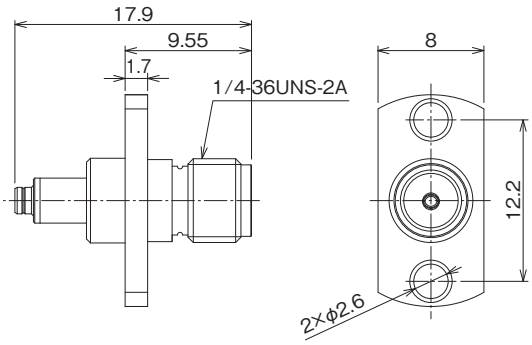

Part No.	HRS No.	Remarks	Purchase Unit
HRMJ-U.FLJ-PA2	CL0311-0467-8-00	SMA (Female Contact)	20pcs per bag

Note: Please avoid mating with the U.FL(A) plug.

Oct.1.2026 Copyright 2026 HIROSE ELECTRIC CO., LTD. All Rights Reserved.

Downloaded from Arrow.com.

●Panel Adapter (Nut Type)

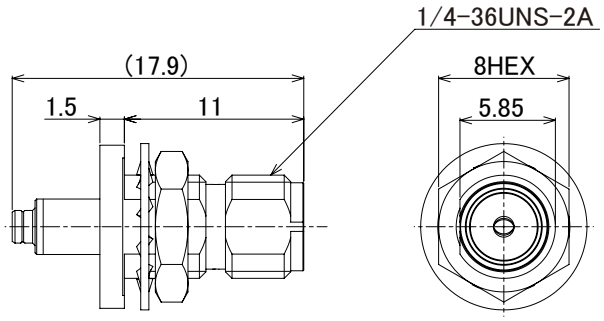

Part No.	HRS No.	Remarks	Purchase Unit
HRMJ-U.FLJ-BPA-4	CL0311-0463-7-00	SMA (Female Contact)	20pcs per bag

Note: Please avoid mating with the U.FL(A) plug.

■Mounting Hole Dimension

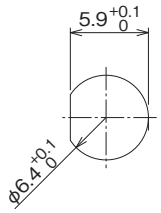

●PCB Mount Adapter

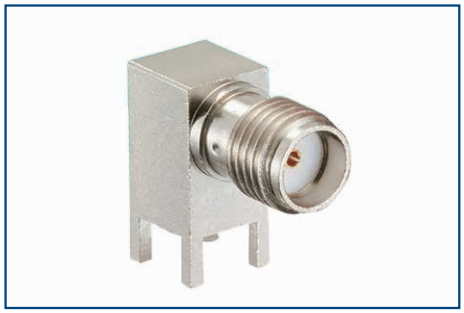

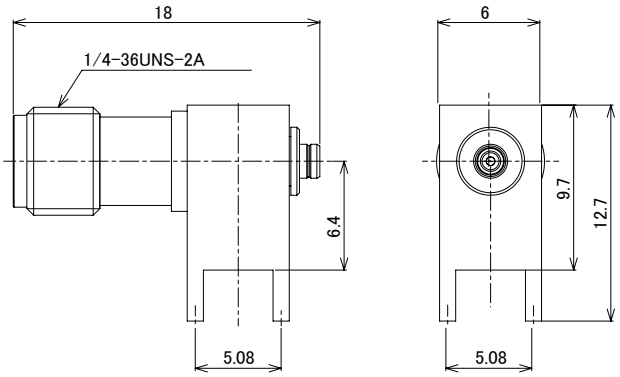

Part No.	HRS No.	Remarks	Purchase Unit
HRMJ-U.FLJ-PC-1	CL0311-0432-3-00	Nickel Plating	50pcs per tray

Note: Please avoid mating with the U.FL(A) plug.

■Mounting Hole Dimension

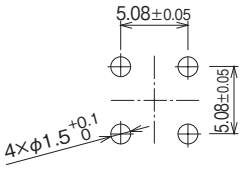

Oct.1.2026 Copyright 2026 HIROSE ELECTRIC CO., LTD. All Rights Reserved.

Downloaded from Arrow.com.

Standard Connectors that Connect with U.FL SMA(R) Adapter Type

●Panel Adapter (4 Screws Type)

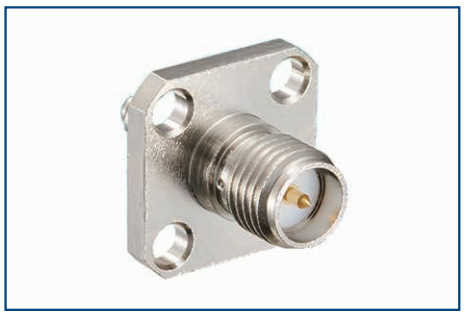

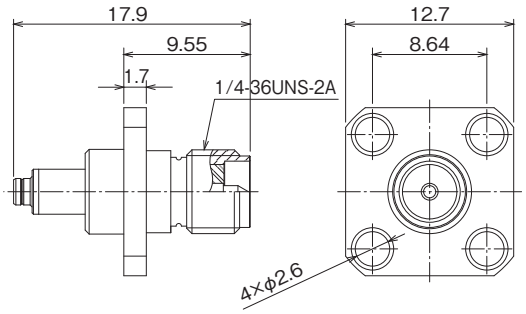

Part No.	HRS No.	Remarks	Purchase Unit
SMA(R)J-U.FLJ-PA4	CL0311-0466-5-00	SMA Reverse (Male Contact)	20pcs per bag

Note: Please avoid mating with the U.FL(A) plug.

●Panel Adapter (2 Screws Type)

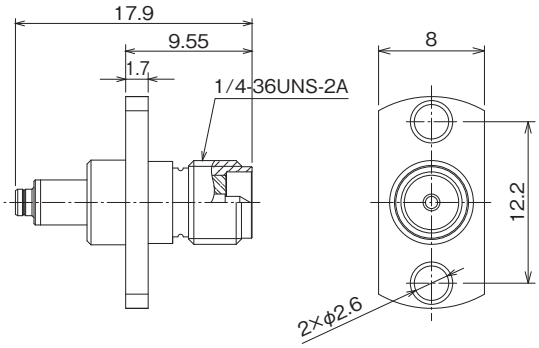

Part No.	HRS No.	Remarks	Purchase Unit
SMA(R)J-U.FLJ-PA2	CL0311-0468-0-00	SMA Reverse (Male Contact)	20pcs per bag

Note: Please avoid mating with the U.FL(A) plug.

Oct.1.2026 Copyright 2026 HIROSE ELECTRIC CO., LTD. All Rights Reserved.

Downloaded from Arrow.com.

●Panel Adapter (Nut Type)

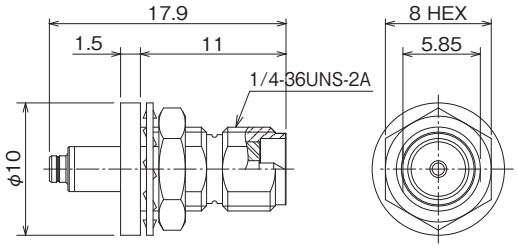

Part No.	HRS No.	Remarks	Purchase Unit
SMA(R)J-U.FLJ-BPA-4	CL0311-0464-0-00	SMA Reverse (Male Contact)	20pcs per bag

Note: Please avoid mating with the U.FL(A) plug.

■Mounting Hole Dimension

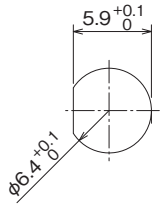

Oct.1.2026 Copyright 2026 HIROSE ELECTRIC CO., LTD. All Rights Reserved.

Downloaded from Arrow.com.

Tools

● Insertion Tool

Tool for plug insertion.

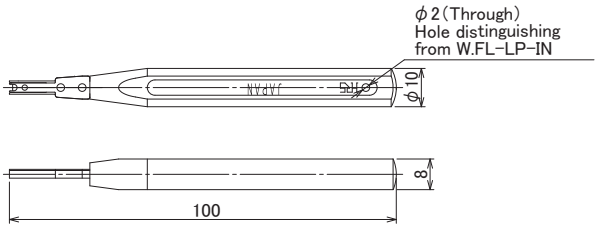

Part No.	HRS No.	Purchase Unit
U.FL-LP-IN	CL0331-0334-9-00	1pc per bag

● Extraction Tool

Tool for unmating.

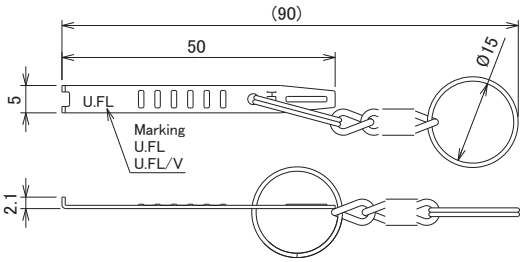

Part No.	HRS No.	Applicable Plug	Purchase Unit
U.FL-LP-N-2	CL0331-0494-5-00	U.FL-LP-040HF, 066HF, 088HF, 068HF	1pc per bag
U.FL-LP(V)-N-2	CL0331-0493-2-00	U.FL-LP-062HF, U.FL-LP(V)-040HF	20pcs per bag

Note: U.FL-LP-N-2 is shared with E.FL series.

● U.FL(A) Insertion and Extraction Tool

Tool for insertion and unmating.

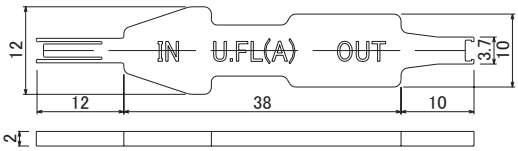

Part No.	HRS No.	Purchase Unit
U.FL(A)-LP-IN.OUT	CL0331-2401-0-00	1pc per bag

Oct.1.2026 Copyright 2026 HIROSE ELECTRIC CO., LTD. All Rights Reserved.

Downloaded from Arrow.com.

Usage Precautions

1. Plugs

1. Mating / Unmating

(1) To disconnect connectors, insert the end portion of U.FL-LP-N-2 and U.FL-LP(V)-N-2 under the connector flanges and pull off vertically, in the direction of the connector mating axis.
However for U.FL(A) (Solderless connection type), use U.FL(A)-LP-IN.OUT and pull out vertically.
When removing the connector directly, hold the connector lid and pull out vertically in relation to the connector mating axis. (Be careful not to damage the connector with fingers or nails.)

(2) To mate the connectors, the mating axes of both connectors must be aligned and the connectors can be mated. The "click" will confirm fully mated connection. Do not attempt to insert on an extreme angle.

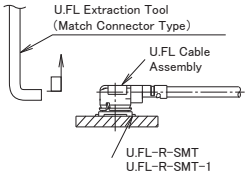

2. Pull forces on the cable after connectors are mated

After the connectors are mating, do not apply a load to the cable in excess of the values indicated in the diagram below.

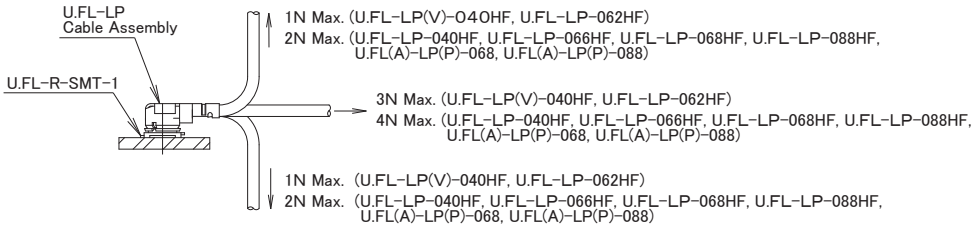

3. Precautions

Do NOT forcefully twist or deform wire.

2. Receptacles

1.Recommended Reflow Temperature Profile	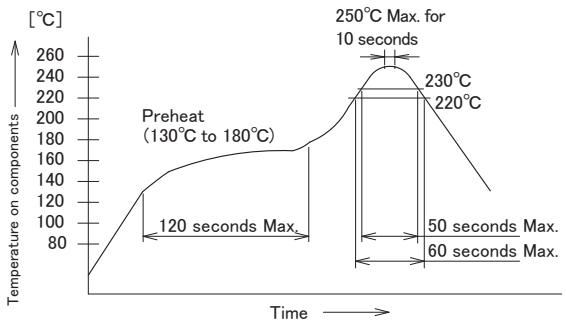 (1) The temperature represents the surface temperature of the printed circuit board at the connector leads. (2) Reflow soldering should be performed at a printed circuit surface temperature of 250℃ max. (3) In individual applications the actual temperature may vary, depending on the solder paste type, volume / thickness and board size / thickness. Consult your solder paste and equipment manufacturer for specific recommendations.
2.Recommended Manual Soldering	Manual soldering : 350℃ for 5 seconds
3.Recommended Metal Mask Thickness	0.1mm to 0.12mm
4.Reflow Cycles	up to 2 cycles

Oct.1.2026 Copyright 2026 HIROSE ELECTRIC CO., LTD. All Rights Reserved.

Downloaded from Arrow.com.

3. Operating Environment and Storage Conditions

1. Operating Environment

The connectors are not designed to operate in the following environments :

- Exposed to a excessive amounts of fine particles and dust
- Regions and places having a high density of sulfur dioxide, hydrogen sulfide, nitrogen dioxide or other corrosive gasses.
- Environments having large rapid variations in temperature.

2. Storage Conditions

Store in the Hirose Electric packaging.
Temperature : -10 to +40℃, Humidity : 85% max.
Use within 6 months of delivery.
Receptacles for which the storage period has elapsed must be tested for solderability to the PC board mounting surface.

3. About Discoloration of Silver Plating

The discoloration is only on the surface and the contact area is wiped so there is no problem with electrical contact

Oct.1.2026 Copyright 2026 HIROSE ELECTRIC CO., LTD. All Rights Reserved.

While Taking into Consideration

Specifications mentioned in this catalog are reference values.
When considering to order or use this product, please review the Drawing and Product Specifications sheets.
Use an appropriate cable when using the connector in combination with cables.
If considering usage of a non-specified cable, please contact your sales representative.
If assembly process is done by jigs & tools which are not identified by Hirose, the warranty of the product may be affected.
If considering usage for below mentioned applications, please contact your sales representative.
In cases where the application will demand a high level of reliability, such as automotive, medical instruments, public infrastructure, aerospace/defense etc. Hirose must review before assurance of reliability can be given.

HIROSE

HIROSE ELECTRIC CO.,LTD. 2-6-3,Nakagawa Chuoh,Tsuzuki-Ku,Yokohama-Shi 224-8540,JAPAN
https://www.hirose.com

※The contents of this catalog are current as of date of 9/2024. Contents are subject to change without notice for the purpose of improvements.
※The HRS logo and "HIROSE" are trademarks of HIROSE ELECTRIC CO., LTD.

Downloaded from Arrow.com.