Overview

The low ESR, surge-robust T495 Automotive, is designed for demanding applications that require high surge current and high ripple current capability. The T495 automotive products build upon the proven capabilities of our industrial grade tantalum chip capacitors to offer several advantages such as low ESR, high ripple current capability, excellent capacitance stability, and improved resistance to high in-rush currents. These benefits are achieved through a combination of proprietary design, materials, and process parameters, as well as high-stress, low impedance electrical conditioning performed prior to screening. The T495 automotive is classified as moisture sensitivity level (MSL)1 under J STD 020, with unlimited floorlife time at ≤ 30°C/85% RH.

Benefits

- Comply with the automotive AEC-Q200 certification
- Meets or exceeds EIA standard 535BAAC
- Tape & Reel standard packaging per EIA 481
- High surge current capability
- Optional gold-plated terminations
- High ripple current capability
- 100% surge current test
- 100% steady-state accelerated aging

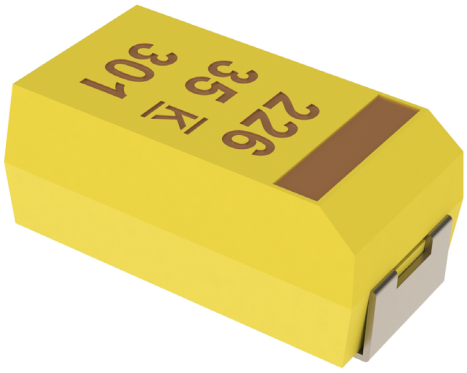

Applications

Typical applications include decoupling and filtering in automotive end applications, such as DC/DC converters, portable electronics, telecommunications, and control units requiring high ripple current capability.

Environmental Compliance

RoHS compliant (6/6) according to Directive 2002/95/EC when ordered with 100% Sn solder, Gold-plated or Non-magnetic 100% Sn solder.

- Halogen-free
- Epoxy compliant with UL94 V-0
- Molded Epoxy complies for outgassing testing under ASTM E 595.

Downloaded from Arrow.com.

K-SIM

For a detailed analysis of specific part numbers, please visit ksim.kemet.com to access KEMET's K-SIM software. KEMET K-SIM is designed to simulate behavior of components with respect to frequency, ambient temperature, and DC bias levels.

Ordering Information

T	495	X	107	M	010	A	T	A080	
Capacitor Class	Series	Case Size	Capacitance Code (pF)	Capacitance Tolerance	Rated Voltage (VDC)	Failure Rate/ Design	Termination Finish	ESR	Packaging (C-Spec)
T = Tantalum	Surge Robust Low ESR	A B C D E T V X	First two digits represent significant figures. Third digit specifies number of zeros.	K = ±10% M = ±20%	2R5 = 2.5 004 = 4 006 = 6.3 010 = 10 016 = 16 020 = 20 025 = 25 035 = 35 050 = 50	A = N/A	T = 100% Matte tin (Sn)-plated H = Standard solder coated (SnPb 5% Pb minimum) G = Gold-plated (A, B, C, D, X only) N = Non-magnetic 100% tin (Sn) M = Non-magnetic (SnPb)	A = AUTO grade product 080 = Maximum ESR in mΩ at room temperature (80 mΩ)	Blank = 7" reel 7280 = 13" reel

Performance Characteristics

Item	Performance Characteristics
Operating Temperature	−55°C to 125°C
Rated Capacitance Range	0.33 – 680 µF at 120 Hz/25°C
Capacitance Tolerance	K tolerance (10%), M tolerance (20%)
Rated Voltage Range	6.3 – 50 V
DF (120 Hz)	Refer to Part Number Electrical Specification Table
ESR (100 kHz)	Refer to Part Number Electrical Specification Table
Leakage Current	≤ 0.01 CV (µA) at rated voltage after 5 minutes

Downloaded from Arrow.com.

Qualification

Test	Condition		Characteristics			
Endurance	85°C at rated voltage, 2,000 hours 125°C at 2/3 rated voltage, 2,000 hours		Δ C/C	Within ±10% of initial value		
			DF	Within initial limits		
			DCL	Within 1.25 x initial limit		
			ESR	Within initial limits		
Storage Life	125°C at 0 volts, 2,000 hours		Δ C/C	Within ±10% of initial value		
			DF	Within initial limits		
			DCL	Within 1.25 x initial limit		
			ESR	Within initial limits		
Thermal Shock	MIL–STD–202, Method 107, Condition B, mounted, –55°C to 125° C, 1,000 cycles		Δ C/C	Within ±5% of initial value		
			DF	Within initial limits		
			DCL	Within 1.25 x initial limit		
			ESR	Within initial limits		
Temperature Stability	Extreme temperature exposure at a succession of continuous steps at +25°C, –55°C, +25°C, +85°C, +125°C, +25°C.		+25°C	–55°C	+85°C	+125°C
		Δ C/C	IL*	±10%	±10%	±20%
		DF	IL	IL	1.5 x IL	1.5 x IL
		DCL	IL	N/A	10 x IL	12 x IL
Surge Voltage	85°C, 1.32 x rated voltage 1,000 cycles (125°C, 1.2 x rated voltage).		Δ C/C	Within ±5% of initial value		
			DF	Within initial limits		
			DCL	Within initial limits		
			ESR	Within initial limits		
Mechanical Shock/ Vibration	MIL–STD–202, Method 213, Condition I, 100 G peak MIL–STD–202, Method 204, Condition D, 10 Hz to 2,000 Hz, 20 G peak		Δ C/C	Within ±10% of initial value		
			DF	Within initial limits		
			DCL	Within initial limits		

**IL = Initial limit*

Certification

KEMET's Internal Qualification Plan for this Tantalum series of capacitors follows AEC–Q200 guidelines. Standard catalog part types ordered without a specific automotive designator, i.e., suffix AUTO or four digit customer specific designator (C Spec), are not considered KEMET automotive grade tantalum capacitors.

Downloaded from Arrow.com.

Electrical Characteristics

ESR vs. Frequency

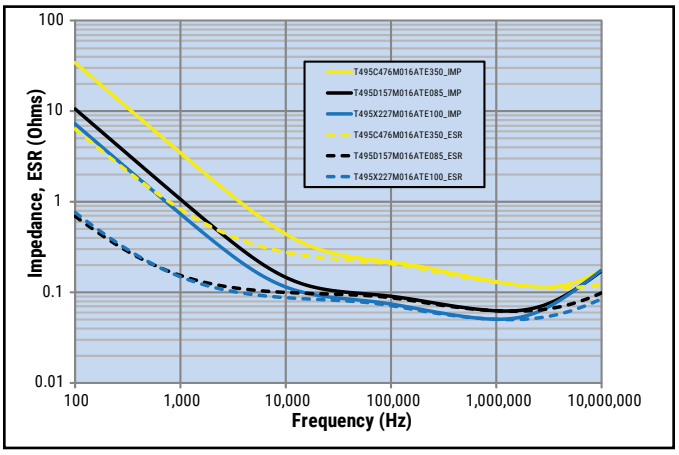

Capacitance vs. Frequency

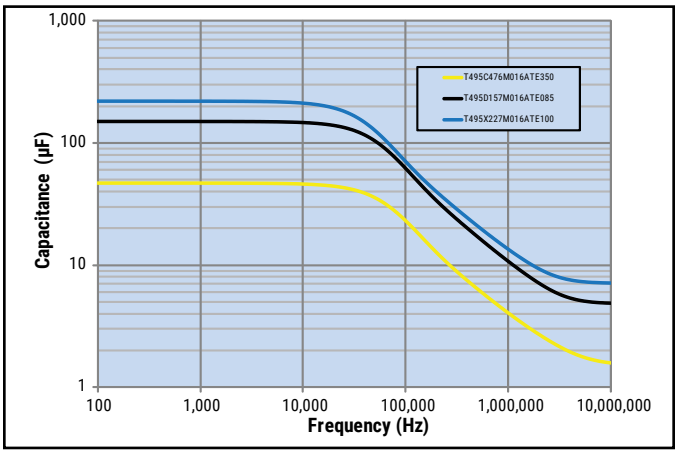

Dimensions – Millimeters (Inches)

Metric will govern

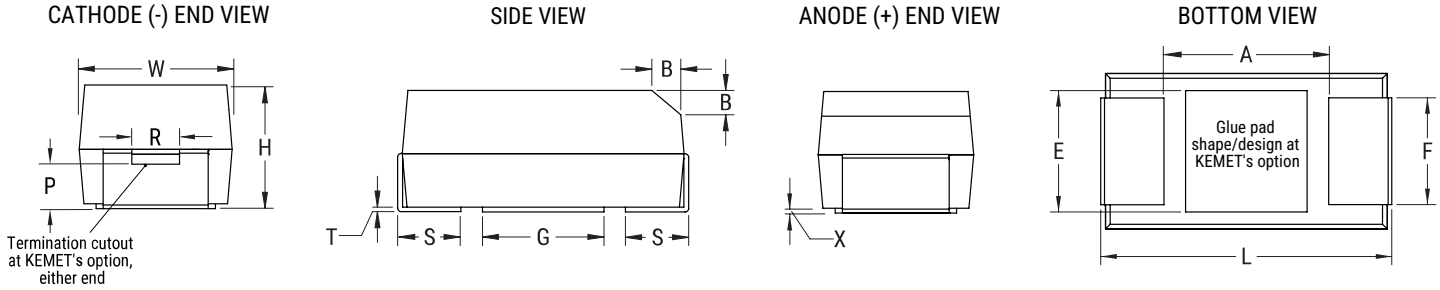

Case Size		Component													Total Weight
KEMET	EIA	L	W	H	F ±0.1 ±(0.004)	S	B ±0.15 (Ref) ±0.006	X (Ref)	P (Ref)	R (Ref)	T (Ref)	A (Min)	G (Ref)	E (Ref)	(mg)
A	3216–18	3.2±0.2 (0.126±0.008)	1.6±0.2 (0.063±0.008)	1.6 ±0.2 (0.063 ±0.008)	1.2 (0.047)	0.80 (0.032) +0.2 (0.008)/−0.3(0.011)	0.4 (0.016)	0.10±0.10 (0.004±0.004)	0.4 (0.016)	0.4 (0.016)	0.13 (0.005)	1.2 (0.047)	1.1 (0.043)	1.3 (0.051)	58.60
B	3528–21	3.5±0.2 (0.138±0.008)	2.8±0.2 (0.110±0.008)	1.9 ±0.2 (0.075 ±0.008)	2.2 (0.087)	0.80 (0.032) +0.1 (0.004)/−0.3(0.011)	0.4 (0.016)	0.10±0.10 (0.004±0.004)	0.5 (0.020)	1.0 (0.039)	0.13 (0.005)	1.9 (0.075)	1.8 (0.071)	2.2 (0.087)	107.45
C	6032–28	6.0±0.3 (0.236±0.012)	3.2±0.3 (0.126±0.012)	2.5 ±0.3 (0.098 ±0.012)	2.2 (0.087)	1.3 (0.051) ±0.3 (0.012)	0.5 (0.020)	0.10±0.10 (0.004±0.004)	0.9 (0.035)	1.0 (0.039)	0.13 (0.005)	2.9 (0.114)	2.8 (0.110)	2.4 (0.094)	224.48
D	7343–31	7.3±0.3 (0.287±0.012)	4.3±0.3 (0.169±0.012)	2.8 ±0.3 (0.110 ±0.012)	2.4 (0.094)	1.3 (0.051) ±0.3 (0.012)	0.5 (0.020)	0.10±0.10 (0.004±0.004)	0.9 (0.035)	1.0 (0.039)	0.13 (0.005)	3.6 (0.142)	3.5 (0.138)	3.5 (0.138)	446.84
X	7343-43	7.3±0.3 (0.287±0.012)	4.3±0.3 (0.169±0.012)	4.0 ±0.3 (0.157 ±0.012)	2.4 (0.094)	1.3 (0.051) ±0.3 (0.012)	0.5 (0.020)	0.10±0.10 (0.004±0.004)	1.7 (0.067)	1.0 (0.039)	0.13 (0.005)	3.6 (0.142)	3.5 (0.138)	3.5 (0.138)	652.04

Notes: (Ref) – Dimensions provided for reference only. For low profile cases, no dimensions are provided for B, P or R because these cases do not have a bevel or a notch.

These weights are provided as reference. If exact weights are needed, please contact your KEMET Sales Representative.

Downloaded from Arrow.com.

Table 1 – Ratings & Part Number Reference

Rated Voltage	Rated Cap	Case Code/ Case Size	KEMET Part Number	DC Leakage	DF	ESR	Maximum Allowable Ripple Current (rms)			Maximum Operating Temp	MSL
VDC at 85°C	µF	KEMET/EIA	(See below for part options)	µA at +25°C Max/5 Min	% at +25°C 120 Hz Max	mΩ at 25°C 100 kHz Max	mA at +25°C 100 kHz	mA at +85°C 100 kHz	mA at +125°C 100 kHz	°C	Reflow Temp ≤ 260°C
6.3	2.2	A/3216-18	T495A225(1)006A(2)A5K0	0.5	6	5,000	122	110	49	125	1
6.3	3.3	A/3216-18	T495A335(1)006A(2)A3K0	0.5	6	3,000	158	142	63	125	1
6.3	4.7	A/3216-18	T495A475(1)006A(2)A3K5	0.5	6	3,500	146	131	58	125	1
6.3	6.8	A/3216-18	T495A685(1)006A(2)A2K0	0.5	6	2,000	194	175	78	125	1
6.3	10	A/3216-18	T495A106(1)006A(2)A2K0	0.6	6	2,000	194	175	78	125	1
6.3	10	A/3216-18	T495A106(1)006A(2)A4K0	0.6	6	4,000	137	130	87	125	1
6.3	10	B/3528-21	T495B106(1)006A(2)A1K0	0.6	6	1,000	292	263	117	125	1
6.3	15	A/3216-18	T495A156(1)006A(2)A2K0	0.9	6	2,000	194	175	78	125	1
6.3	22	A/3216-18	T495A226(1)006A(2)A1K5	1.4	6	1,500	224	202	90	125	1
6.3	22	B/3528-21	T495B226(1)006A(2)A500	1.4	6	500	412	371	165	125	1
6.3	22	C/6032-28	T495C226(1)006A(2)A380	1.4	6	380	538	484	215	125	1
6.3	22	C/6032-28	T495C226(1)006A(2)A2K0	1.4	6	2,000	234	222	148	125	1
6.3	33	A/3216-18	T495A336(1)006A(2)A1K0	2.1	12	1,000	274	247	110	125	1
6.3	33	B/3528-21	T495B336(1)006A(2)A600	2.1	6	600	376	338	150	125	1
6.3	33	C/6032-28	T495C336(1)006A(2)A350	2.1	6	350	561	505	224	125	1
6.3	47	B/3528-21	T495B476(1)006A(2)A500	3.0	6	500	412	371	165	125	1
6.3	68	B/3528-21	T495B686(1)006A(2)A500	4.3	8	500	412	371	165	125	1
6.3	68	C/6032-28	T495C686(1)006A(2)A400	4.3	6	400	524	472	210	125	1
6.3	68	D/7343-31	T495D686(1)006A(2)A180	4.3	4	180	913	822	365	125	1
6.3	100	B/3528-21	T495B107(M)006A(2)A700	6.3	15	700	348	313	139	125	1
6.3	100	C/6032-28	T495C107(1)006A(2)A1K2	6.3	8	1,200	303	287	191	125	1
6.3	100	C/6032-28	T495C107(1)006A(2)A150	6.3	8	150	856	770	342	125	1
6.3	100	D/7343-31	T495D107(1)006A(2)A150	6.3	8	150	1,000	900	400	125	1
6.3	100	D/7343-31	T495D107(1)006A(2)A130	6.3	8	130	1,074	1,019	679	125	1
6.3	150	D/7343-31	T495D157(1)006A(2)A100	9.5	6	100	1,225	1,103	490	125	1
6.3	150	D/7343-31	T495D157(1)006A(2)A125	9.5	6	125	1,095	986	438	125	1
6.3	150	X/7343-43	T495X157(1)006A(2)A100	9.5	6	100	1,285	1,157	514	125	1
6.3	220	C/6032-28	T495C227(1)006A(2)A225	13.9	10	225	699	629	280	125	1
6.3	220	D/7343-31	T495D227(1)006A(2)A100	13.9	8	100	1,225	1,103	490	125	1
6.3	220	D/7343-31	T495D227(1)006A(2)A800	13.9	8	800	433	411	274	125	1
6.3	220	X/7343-43	T495X227(1)006A(2)A100	13.9	8	100	1,285	1,157	514	125	1
6.3	330	D/7343-31	T495D337(1)006A(2)A100	20.8	8	100	1,225	1,103	490	125	1
6.3	330	D/7343-31	T495D337(1)006A(2)A800	20.8	8	800	433	411	274	125	1
6.3	330	X/7343-43	T495X337(1)006A(2)A100	20.8	8	100	1,285	1,157	514	125	1
6.3	470	D/7343-31	T495D477(1)006A(2)A150	29.6	12	150	1,000	900	400	125	1
6.3	470	X/7343-43	T495X477(1)006A(2)A100	29.6	10	100	1,285	1,157	514	125	1
6.3	680	X/7343-43	T495X687(1)006A(2)A100	42.8	12	100	1,285	1,157	514	125	1
10	1.5	A/3216-18	T495A155(1)010A(2)A5K0	0.5	6	5,000	122	110	49	125	1
10	2.2	A/3216-18	T495A225(1)010A(2)A2K0	0.5	6	2,000	194	175	78	125	1
10	3.3	A/3216-18	T495A335(1)010A(2)A5K5	0.5	6	5,500	117	105	47	125	1
10	4.7	A/3216-18	T495A475(1)010A(2)A2K0	0.5	6	2,000	194	175	78	125	1
10	4.7	A/3216-18	T495A475(1)010A(2)A4K5	0.5	6	4,500	129	122	82	125	1
10	4.7	B/3528-21	T495B475(1)010A(2)A1K5	0.5	6	1,500	238	214	95	125	1
10	6.8	A/3216-18	T495A685(1)010A(2)A2K0	0.7	6	1,800	204	184	82	125	1
10	6.8	B/3528-21	T495B685(1)010A(2)A1K2	0.7	6	1,200	266	239	106	125	1
VDC at 85°C	µF	KEMET/EIA	(See below for part options)	µA at +25°C Max/5 Min	% at +25°C 120 Hz Max	mΩ at 25°C 100 kHz Max	mA at +25°C 100 kHz	mA at +85°C 100 kHz	mA at +125°C 100 kHz	°C	Reflow Temp ≤ 260°C
Rated Voltage	Rated Cap	Case Code/ Case Size	KEMET Part Number	DC Leakage	DF	ESR	Maximum Allowable Ripple Current (rms)			Maximum Operating Temp	MSL

(1) To complete KEMET part number, insert M for ±20% or K for ±10%. Designates Capacitance tolerance.
(2) To complete KEMET part number, insert T = 100% Matte Tin (Sn)-plated, G = Gold-plated, H = Standard Solder coated (SnPb 5% Pb minimum), N = Non-Magnetic 100% Tin (Sn), M = Non-Magnetic (SnPb). Designates Termination Finish.
Refer to Ordering Information for additional detail.
Higher voltage ratings and tighter tolerance product including ESR may be substituted within the same size at KEMET's option. Voltage substitution will be marked with the higher voltage rating. Substitutions can include better than series.

Downloaded from Arrow.com.

Table 1 – Ratings & Part Number Reference cont.

Rated Voltage	Rated Cap	Case Code/ Case Size	KEMET Part Number	DC Leakage	DF	ESR	Maximum Allowable Ripple Current (rms)			Maximum Operating Temp	MSL
VDC at 85°C	µF	KEMET/EIA	(See below for part options)	µA at +25°C Max/5 Min	% at +25°C 120 Hz Max	mΩ at 25°C 100 kHz Max	mA at +25°C 100 kHz	mA at +85°C 100 kHz	mA at +125°C 100 kHz	°C	Reflow Temp ≤ 260°C
10	6.8	B/3528-21	T495B685(1)010A(2)A1K1	0.7	6	1,100	278	264	176	125	1
10	10	A/3216-18	T495A106(1)010A(2)A2K0	1.0	6	2,000	194	175	78	125	1
10	10	B/3528-21	T495B106(1)010A(2)A3K0	1.0	6	3,000	97	88	39	125	1
10	10	B/3528-21	T495B106(1)010A(2)A1K2	1.0	6	1,200	266	239	106	125	1
10	10	C/6032-28	T495C106(1)010A(2)A400	1.0	6	400	524	472	210	125	1
10	15	A/3216-18	T495A156(1)010A(2)A1K8	1.5	6	1,800	204	184	82	125	1
10	15	B/3528-21	T495B156(1)010A(2)A900	1.5	6	900	307	276	123	125	1
10	15	C/6032-28	T495C156(1)010A(2)A475	1.5	6	475	481	433	192	125	1
10	22	A/3216-18	T495A226(1)010A(2)A1K5	2.2	8	1,500	224	202	90	125	1
10	22	B/3528-21	T495B226(1)010A(2)A2K3	2.2	6	2,300	192	173	77	125	1
10	22	B/3528-21	T495B226(1)010A(2)A1K5	2.2	6	1,500	238	226	150	125	1
10	22	C/6032-28	T495C226(1)010A(2)A1K6	2.2	6	1,600	111	100	44	125	1
10	22	C/6032-28	T495C226(1)010A(2)A380	2.2	6	380	538	484	215	125	1
10	22	C/6032-28	T495C226(1)010A(2)A350	2.2	6	350	561	505	224	125	1
10	22	C/6032-28	T495C226(1)010A(2)A245	2.2	6	245	670	636	423	125	1
10	33	B/3528-21	T495B336(1)010A(2)A650	3.3	6	650	362	326	145	125	1
10	33	B/3528-21	T495B336(1)010A(2)A1K5	3.3	6	1,500	111	100	44	125	1
10	33	C/6032-28	T495C336(1)010A(2)A1K5	3.3	6	1,500	271	257	171	125	1
10	33	C/6032-28	T495C336(1)010A(2)A380	3.3	6	380	538	484	215	125	1
10	33	C/6032-28	T495C336(1)010A(2)A300	3.3	6	300	606	545	242	125	1
10	47	B/3528-21	T495B476(1)010A(2)A650	4.7	6	650	362	326	145	125	1
10	47	B/3528-21	T495B476(1)010A(2)A500	4.7	6	500	412	371	165	125	1
10	47	C/6032-28	T495C476(1)010A(2)A1K4	4.7	6	1,400	280	266	177	125	1
10	47	C/6032-28	T495C476(1)010A(2)A300	4.7	6	300	606	545	242	125	1
10	47	D/7343-31	T495D476(1)010A(2)A080	4.7	4	80	1,369	1,232	548	125	1
10	47	D/7343-31	T495D476(1)010A(2)A200	4.7	4	200	866	779	346	125	1
10	68	D/7343-31	T495D686(1)010A(2)A100	6.8	6	100	1,225	1,103	490	125	1
10	68	X/7343-43	T495X686(1)010A(2)A150	6.8	4	150	1,049	944	420	125	1
10	68	B/3528-21	T495B686(1)010A(2)A900	6.8	8	900	307	276	123	125	1
10	68	C/6032-28	T495C686(1)010A(2)A200	6.8	6	200	742	668	297	125	1
10	68	D/7343-31	T495D686(1)010A(2)A080	6.8	6	80	1,369	1232	548	125	1
10	100	C/6032-28	T495C107(1)010A(2)A1K2	10.0	8	1,200	303	287	191	125	1
10	100	D/7343-31	T495D107(1)010A(2)A080	10.0	8	80	1,369	1,232	548	125	1
10	100	D/7343-31	T495D107(1)010A(2)A100	10.0	8	100	1,225	1,103	490	125	1
10	100	D/7343-31	T495D107(1)010A(2)A800	10.0	8	800	433	411	274	125	1
10	100	X/7343-43	T495X107(1)010A(2)A150	10.0	6	150	1,049	944	420	125	1
10	100	X/7343-43	T495X107(1)010A(2)A100	10.0	6	100	1,285	1,157	514	125	1
10	150	D/7343-31	T495D157(1)010A(2)A100	15.0	8	100	1,225	1,103	490	125	1
10	150	X/7343-43	T495X157(1)010A(2)A100	15.0	8	100	1,285	1,157	514	125	1
10	220	D/7343-31	T495D227(1)010A(2)A100	22.0	8	100	1,225	1,103	490	125	1
10	220	D/7343-31	T495D227(1)010A(2)A125	22.0	8	125	1,095	986	438	125	1
10	220	D/7343-31	T495D227(1)010A(2)A800	22.0	10	800	433	411	274	125	1
10	220	X/7343-43	T495X227(1)010A(2)A100	22.0	8	100	1,285	1,157	514	125	1
10	220	X/7343-43	T495X227(1)010A(2)A600	22.0	8	600	524	497	829	125	1
10	330	D/7343-31	T495D337(1)010A(2)A100	33.0	10	100	1,225	1,103	490	125	1
VDC at 85°C	µF	KEMET/EIA	(See below for part options)	µA at +25°C Max/5 Min	% at +25°C 120 Hz Max	mΩ at 25°C 100 kHz Max	mA at +25°C 100 kHz	mA at +85°C 100 kHz	mA at +125°C 100 kHz	°C	Reflow Temp ≤ 260°C
Rated Voltage	Rated Cap	Case Code/ Case Size	KEMET Part Number	DC Leakage	DF	ESR	Maximum Allowable Ripple Current (rms)			Maximum Operating Temp	MSL

(1) To complete KEMET part number, insert M for ±20% or K for ±10%. Designates Capacitance tolerance.
(2) To complete KEMET part number, insert T = 100% Matte Tin (Sn)-plated, G = Gold-plated, H = Standard Solder coated (SnPb 5% Pb minimum), N = Non-Magnetic 100% Tin (Sn), M = Non-Magnetic (SnPb). Designates Termination Finish.
Refer to Ordering Information for additional detail.
Higher voltage ratings and tighter tolerance product including ESR may be substituted within the same size at KEMET's option. Voltage substitution will be marked with the higher voltage rating. Substitutions can include better than series.

Downloaded from Arrow.com.

Table 1 – Ratings & Part Number Reference cont.

Rated Voltage	Rated Cap	Case Code/ Case Size	KEMET Part Number	DC Leakage	DF	ESR	Maximum Allowable Ripple Current (rms)			Maximum Operating Temp	MSL
VDC at 85°C	µF	KEMET/EIA	(See below for part options)	µA at +25°C Max/5 Min	% at +25°C 120 Hz Max	mΩ at 25°C 100 kHz Max	mA at +25°C 100 kHz	mA at +85°C 100 kHz	mA at +125°C 100 kHz	°C	Reflow Temp ≤ 260°C
10	330	D/7343-31	T495D337(1)010A(2)A125	33.0	10	125	1,095	986	438	125	1
10	330	D/7343-31	T495D337(1)010A(2)A150	33.0	10	150	1,000	900	400	125	1
10	330	X/7343-43	T495X337(1)010A(2)A100	33.0	10	100	1,285	1,157	514	125	1
10	470	X/7343-43	T495X477(1)010A(2)A100	47.0	10	100	1,285	1,157	514	125	1
10	470	X/7343-43	T495X477(1)010A(2)A200	47.0	10	200	908	817	363	125	1
16	1	A/3216-18	T495A105(1)016A(2)A5K0	0.5	6	5,000	122	110	49	125	1
16	1	A/3216-18	T495A105(1)016A(2)A10K	0.5	4	10,000	87	82	55	125	1
16	1.5	A/3216-18	T495A155(1)016A(2)A5K0	0.5	6	5,000	122	110	49	125	1
16	2.2	A/3216-18	T495A225(1)016A(2)A2K5	0.5	6	2,500	173	156	69	125	1
16	2.2	A/3216-18	T495A225(1)016A(2)A6K5	0.5	6	6,500	107	102	68	125	1
16	3.3	A/3216-18	T495A335(1)016A(2)A3K0	0.5	6	3,000	158	142	63	125	1
16	3.3	A/3216-18	T495A335(1)016A(2)A5K0	0.5	6	5,000	122	116	77	125	1
16	3.3	B/3528-21	T495B335(1)016A(2)A2K0	0.5	6	2,000	206	185	82	125	1
16	4.7	A/3216-18	T495A475(1)016A(2)A2K0	0.8	6	2,000	194	175	78	125	1
16	4.7	A/3216-18	T495A475(1)016A(2)A4K0	0.8	6	4,000	137	130	87	125	1
16	4.7	B/3528-21	T495B475(1)016A(2)A1K5	0.8	6	1,500	238	214	95	125	1
16	4.7	B/3528-21	T495B475(1)016A(2)A3K5	0.8	6	3,500	156	148	99	125	1
16	6.8	B/3528-21	T495B685(1)016A(2)A1K2	1.1	6	1,200	266	239	106	125	1
16	10	B/3528-21	T495B106(1)016A(2)A1K6	1.6	6	1,600	230	207	92	125	1
16	10	B/3528-21	T495B106(1)016A(2)A2K5	1.6	6	2,500	184	166	74	125	1
16	10	C/6032-28	T495C106(1)016A(2)A450	1.6	8	450	494	445	198	125	1
16	10	C/6032-28	T495C106(1)016A(2)A2K0	1.6	6	2,000	234	222	148	125	1
16	15	A/3216-18	T495A156(1)016A(2)A2K5	2.4	8	2,500	173	156	69	125	1
16	15	B/3528-21	T495B156(1)016A(2)A800	2.4	6	800	326	293	130	125	1
16	15	C/6032-28	T495C156(1)016A(2)A400	2.4	6	400	524	497	262	125	1
16	22	B/3528-21	T495B226(1)016A(2)A1K8	3.5	6	1,800	217	206	137	125	1
16	22	B/3528-21	T495B226(1)016A(2)A700	3.5	6	700	348	313	139	125	1
16	22	C/6032-28	T495C226(1)016A(2)A1K5	3.5	6	1,500	271	257	171	125	1
16	22	C/6032-28	T495C226(1)016A(2)A350	3.5	6	350	561	505	224	125	1
16	22	D/7343-31	T495D226(1)016A(2)A1K1	3.5	6	1,100	1,000	949	632	125	1
16	33	B/3528-21	T495B336(1)016A(2)A350	5.3	6	350	493	444	197	125	1
16	33	C/6032-28	T495C336(1)016A(2)A1K4	5.3	6	1,400	280	266	177	125	1
16	33	C/6032-28	T495C336(1)016A(2)A300	5.3	6	300	606	545	242	125	1
16	33	D/7343-31	T495D336(1)016A(2)A200	5.3	6	200	866	779	346	125	1
16	33	D/7343-31	T495D336(1)016A(2)A250	5.3	6	250	775	698	310	125	1
16	33	D/7343-31	T495D336(1)016A(2)A1K0	5.3	6	1,000	387	367	245	125	1
16	47	C/6032-28	T495C476(1)016A(2)A1K4	7.5	6	1,400	280	266	177	125	1
16	47	C/6032-28	T495C476(1)016A(2)A350	7.5	6	350	561	505	224	125	1
16	47	D/7343-31	T495D476(1)016A(2)A100	7.5	6	100	1,225	1,162	775	125	1
16	47	D/7343-31	T495D476(1)016A(2)A120	7.5	6	120	1,118	1,006	447	125	1
16	47	D/7343-31	T495D476(1)016A(2)A150	7.5	6	150	1,000	900	400	125	1
16	47	D/7343-31	T495D476(1)016A(2)A180	7.5	6	180	913	822	365	125	1
16	47	D/7343-31	T495D476(1)016A(2)A300	7.5	6	800	433	390	173	125	1
16	68	C/6032-28	T495C686(1)016A(2)A250	10.9	6	250	663	597	265	125	1
16	68	D/7343-31	T495D686(1)016A(2)A150	10.9	6	150	1,000	900	400	125	1
VDC at 85°C	µF	KEMET/EIA	(See below for part options)	µA at +25°C Max/5 Min	% at +25°C 120 Hz Max	mΩ at 25°C 100 kHz Max	mA at +25°C 100 kHz	mA at +85°C 100 kHz	mA at +125°C 100 kHz	°C	Reflow Temp ≤ 260°C
Rated Voltage	Rated Cap	Case Code/ Case Size	KEMET Part Number	DC Leakage	DF	ESR	Maximum Allowable Ripple Current (rms)			Maximum Operating Temp	MSL

(1) To complete KEMET part number, insert M for ±20% or K for ±10%. Designates Capacitance tolerance.
(2) To complete KEMET part number, insert T = 100% Matte Tin (Sn)-plated, G = Gold-plated, H = Standard Solder coated (SnPb 5% Pb minimum), N = Non-Magnetic 100% Tin (Sn), M = Non-Magnetic (SnPb). Designates Termination Finish.
Refer to Ordering Information for additional detail.
Higher voltage ratings and tighter tolerance product including ESR may be substituted within the same size at KEMET's option. Voltage substitution will be marked with the higher voltage rating. Substitutions can include better than series.

Downloaded from Arrow.com.

Table 1 – Ratings & Part Number Reference cont.

Rated Voltage	Rated Cap	Case Code/ Case Size	KEMET Part Number	DC Leakage	DF	ESR	Maximum Allowable Ripple Current (rms)			Maximum Operating Temp	MSL
VDC at 85°C	µF	KEMET/EIA	(See below for part options)	µA at +25°C Max/5 Min	% at +25°C 120 Hz Max	mΩ at 25°C 100 kHz Max	mA at +25°C 100 kHz	mA at +85°C 100 kHz	mA at +125°C 100 kHz	°C	Reflow Temp ≤ 260°C
16	68	X/7343-43	T495X686(1)016A(2)A150	10.9	8	150	1,049	944	420	125	1
16	100	D/7343-31	T495D107(1)016A(2)A100	16.0	8	100	1,225	1,162	775	125	1
16	100	D/7343-31	T495D107(1)016A(2)A130	16.0	8	130	1,074	967	430	125	1
16	100	D/7343-31	T495D107(1)016A(2)A150	16.0	8	150	1,000	900	400	125	1
16	100	X/7343-43	T495X107(1)016A(2)A100	16.0	8	100	1,285	1,157	514	125	1
16	100	X/7343-43	T495X107(1)016A(2)A800	16.0	8	800	454	431	287	125	1
16	150	D/7343-31	T495D157(1)016A(2)A130	24.0	8	130	1,074	967	430	125	1
16	150	D/7343-31	T495D157(1)016A(2)A150	24.0	8	150	1,000	900	400	125	1
16	150	X/7343-43	T495X157(1)016A(2)A100	24.0	8	100	1,285	1,157	514	125	1
16	220	X/7343-43	T495X227(1)016A(2)A100	35.2	8	100	1,285	1,157	514	125	1
20	1	A/3216-18	T495A105(1)020A(2)A5K0	0.5	4	5,000	122	110	49	125	1
20	1.5	A/3216-18	T495A155(1)020A(2)A4K5	0.5	6	4,500	129	116	52	125	1
20	2.2	A/3216-18	T495A225(1)020A(2)A3K0	0.5	6	3,000	158	142	63	125	1
20	2.2	A/3216-18	T495A225(1)020A(2)A6K0	0.5	6	6,000	119	106	71	125	1
20	2.2	B/3528-21	T495B225(1)020A(2)A1K5	0.5	6	1,500	238	214	95	125	1
20	3.3	B/3528-21	T495B335(1)020A(2)A1K5	0.7	6	1,500	238	214	95	125	1
20	4.7	A/3216-18	T495A475(1)020A(2)A2K0	0.9	6	2,000	194	175	78	125	1
20	4.7	B/3528-21	T495B475(1)020A(2)A1K0	0.9	6	1,000	292	263	117	125	1
20	4.7	B/3528-21	T495B475(1)020A(2)A3K0	0.9	6	3,000	168	160	106	125	1
20	6.8	B/3528-21	T495B685(1)020A(2)A1K0	1.4	6	1,000	292	263	117	125	1
20	6.8	C/6032-28	T495C685(1)020A(2)A480	1.4	6	480	479	431	192	125	1
20	10	B/3528-21	T495B106(1)020A(2)A1K0	2.0	6	1,000	292	263	117	125	1
20	10	C/6032-28	T495C106(1)020A(2)A1K6	2.0	6	1,600	262	249	166	125	1
20	10	C/6032-28	T495C106(1)020A(2)A475	2.0	6	475	481	433	192	125	1
20	15	C/6032-28	T495C156(1)020A(2)A1K5	3.0	6	1,500	271	257	171	125	1
20	15	C/6032-28	T495C156(1)020A(2)A400	3.0	6	400	524	472	210	125	1
20	15	D/7343-31	T495D156(1)020A(2)A275	3.0	4	275	739	665	296	125	1
20	22	C/6032-28	T495C226(1)020A(2)A1K4	4.4	6	1,400	280	266	177	125	1
20	22	D/7343-31	T495D226(1)020A(2)A1K0	4.4	6	1,000	387	367	245	125	1
20	22	D/7343-31	T495D226(1)020A(2)A200	4.4	4	200	870	783	348	125	1
20	22	D/7343-31	T495D226(1)020A(2)A180	4.4	4	180	913	822	365	125	1
20	33	D/7343-31	T495D336(1)020A(2)A200	6.6	6	200	866	779	346	125	1
20	33	D/7343-31	T495D336(1)020A(2)A800	6.6	6	800	433	411	274	125	1
20	33	X/7343-43	T495X336(1)020A(2)A200	6.6	8	200	908	817	363	125	1
20	47	D/7343-31	T495D476(1)020A(2)A250	9.4	6	250	775	698	310	125	1
20	47	D/7343-31	T495D476(1)020A(2)A800	9.4	6	800	433	411	274	125	1
20	47	X/7343-43	T495X476(1)020A(2)A150	9.4	4	150	1,049	944	420	125	1
20	47	X/7343-43	T495X476(1)020A(2)A100	9.4	4	100	1,285	1,219	812	125	1
20	68	D/7343-31	T495D686(1)020A(2)A300	13.6	6	300	707	636	283	125	1
20	68	X/7343-43	T495X686(1)020A(2)A120	13.6	6	120	1,173	1,056	469	125	1
20	100	D/7343-31	T495D107(1)020A(2)A200	20.0	8	200	870	783	348	125	1
20	100	X/7343-43	T495X107(1)020A(2)A150	20.0	8	150	1,049	944	420	125	1
25	1	A/3216-18	T495A105(1)025A(2)A5K0	0.5	4	5,000	122	110	49	125	1
25	1	A/3216-18	T495A105(1)025A(2)A8K0	0.5	6	8,000	97	92	61	125	1
25	1.5	B/3528-21	T495B155(1)025A(2)A1K5	0.5	6	1,500	238	214	95	125	1
VDC at 85°C	µF	KEMET/EIA	(See below for part options)	µA at +25°C Max/5 Min	% at +25°C 120 Hz Max	mΩ at 25°C 100 kHz Max	mA at +25°C 100 kHz	mA at +85°C 100 kHz	mA at +125°C 100 kHz	°C	Reflow Temp ≤ 260°C
Rated Voltage	Rated Cap	Case Code/ Case Size	KEMET Part Number	DC Leakage	DF	ESR	Maximum Allowable Ripple Current (rms)			Maximum Operating Temp	MSL

(1) To complete KEMET part number, insert M for ±20% or K for ±10%. Designates Capacitance tolerance.
(2) To complete KEMET part number, insert T = 100% Matte Tin (Sn)-plated, G = Gold-plated, H = Standard Solder coated (SnPb 5% Pb minimum), N = Non-Magnetic 100% Tin (Sn), M = Non-Magnetic (SnPb). Designates Termination Finish.
Refer to Ordering Information for additional detail.
Higher voltage ratings and tighter tolerance product including ESR may be substituted within the same size at KEMET's option. Voltage substitution will be marked with the higher voltage rating. Substitutions can include better than series.

Downloaded from Arrow.com.

Table 1 – Ratings & Part Number Reference cont.

Rated Voltage	Rated Cap	Case Code/ Case Size	KEMET Part Number	DC Leakage	DF	ESR	Maximum Allowable Ripple Current (rms)			Maximum Operating Temp	MSL
VDC at 85°C	µF	KEMET/EIA	(See below for part options)	µA at +25°C Max/5 Min	% at +25°C 120 Hz Max	mΩ at 25°C 100 kHz Max	mA at +25°C 100 kHz	mA at +85°C 100 kHz	mA at +125°C 100 kHz	°C	Reflow Temp ≤ 260°C
25	2.2	B/3528-21	T495B225(1)025A(2)A1K2	0.6	6	1,200	266	239	106	125	1
25	2.2	C/6032-28	T495C225(1)025A(2)A1K3	0.6	6	1,300	291	262	116	125	1
25	3.3	B/3528-21	T495B335(1)025A(2)A1K2	0.8	6	1,200	266	239	106	125	1
25	3.3	C/6032-28	T495C335(1)025A(2)A750	0.8	6	750	383	345	153	125	1
25	4.7	B/3528-21	T495B475(1)025A(2)A1K0	1.2	6	1,000	292	263	117	125	1
25	4.7	B/3528-21	T495B475(1)025A(2)A3K2	1.2	6	3,200	163	155	103	125	1
25	4.7	C/6032-28	T495C475(1)025A(2)A575	1.2	6	575	437	393	175	125	1
25	6.8	B/3528-21	T495B685(1)025A(2)A1K5	1.7	6	1,500	238	214	95	125	1
25	6.8	C/6032-28	T495C685(1)025A(2)A500	1.7	6	500	469	422	188	125	1
25	10	B/3528-21	T495B106(1)025A(2)A750	2.5	6	750	340	306	136	125	1
25	10	C/6032-28	T495C106(1)025A(2)A450	2.5	6	450	494	445	198	125	1
25	10	C/6032-28	T495C106(1)025A(2)A1K6	2.5	6	1,600	262	249	166	125	1
25	10	D/7343-31	T495D106(1)025A(2)A1K2	2.5	6	1,200	354	319	142	125	1
25	15	C/6032-28	T495C156(1)025A(2)A300	3.8	6	300	606	545	242	125	1
25	15	D/7343-31	T495D156(1)025A(2)A275	3.8	6	275	739	665	296	125	1
25	15	X/7343-43	T495X156(1)025A(2)A200	3.8	4	200	908	817	363	125	1
25	22	C/6032-28	T495C226(1)025A(2)A900	5.5	6	900	350	315	140	125	1
25	22	D/7343-31	T495D226(1)025A(2)A200	5.5	6	200	866	779	346	125	1
25	22	D/7343-31	T495D226(1)025A(2)A800	5.5	6	800	433	411	274	125	1
25	22	X/7343-43	T495X226(1)025A(2)A230	5.5	4	230	847	762	339	125	1
25	33	D/7343-31	T495D336(1)025A(2)A200	8.3	6	200	866	779	346	125	1
25	33	D/7343-31	T495D336(1)025A(2)A800	8.3	6	800	433	411	274	125	1
25	33	X/7343-43	T495X336(1)025A(2)A200	8.3	4	200	908	817	363	125	1
25	47	D/7343-31	T495D476(1)025A(2)A120	11.8	6	120	1,118	1,006	447	125	1
25	47	D/7343-31	T495D476(1)025A(2)A150	11.8	6	150	1,000	900	400	125	1
25	47	D/7343-31	T495D476(1)025A(2)A250	11.8	6	250	775	735	490	125	1
25	47	X/7343-43	T495X476(1)025A(2)A800	11.6	6	800	454	431	287	125	1
25	47	X/7343-43	T495X476(1)025A(2)A120	11.8	6	120	1,173	1,056	469	125	1
25	47	X/7343-43	T495X476(1)025A(2)A100	11.8	6	100	1,285	1,157	514	125	1
25	68	D/7343-31	T495D686(1)025A(2)A200	17.0	10	200	866	779	346	125	1
25	68	X/7343-43	T495X686(1)025A(2)A200	17.0	6	200	908	817	363	125	1
25	68	X/7343-43	T495X686(1)025A(2)A150	17.0	6	150	1,049	995	663	125	1
25	100	X/7343-43	T495X107(1)025A(2)A150	25.0	10	150	1,049	944	420	125	1
35	0.33	A/3216-18	T495A334(1)035A(2)A7K0	0.5	4	7,000	104	94	42	125	1
35	0.47	A/3216-18	T495A474(1)035A(2)A7K0	0.5	4	7,000	104	94	42	125	1
35	0.47	B/3528-21	T495B474(1)035A(2)A2K5	0.5	4	2,500	184	166	74	125	1
35	0.68	A/3216-18	T495A684(1)035A(2)A6K0	0.5	4	6,000	112	101	45	125	1
35	1	A/3216-18	T495A105(1)035A(2)A7K0	0.5	4	7,000	104	94	42	125	1
35	1	B/3528-21	T495B105(1)035A(2)A2K0	0.5	4	2,000	206	185	82	125	1
35	1.5	B/3528-21	T495B155(1)035A(2)A2K0	0.5	6	2,000	206	185	82	125	1
35	2.2	B/3528-21	T495B225(1)035A(2)A2K0	0.8	6	2,000	206	185	82	125	1
35	2.2	C/6032-28	T495C225(1)035A(2)A750	0.8	6	750	383	345	153	125	1
35	3.3	B/3528-21	T495B335(1)035A(2)A1K0	1.2	6	1,000	292	263	117	125	1
35	3.3	C/6032-28	T495C335(1)035A(2)A600	1.2	6	600	428	385	171	125	1
35	4.7	B/3528-21	T495B475(1)035A(2)A1K0	1.6	6	1,000	292	263	117	125	1
VDC at 85°C	µF	KEMET/EIA	(See below for part options)	µA at +25°C Max/5 Min	% at +25°C 120 Hz Max	mΩ at 25°C 100 kHz Max	mA at +25°C 100 kHz	mA at +85°C 100 kHz	mA at +125°C 100 kHz	°C	Reflow Temp ≤ 260°C
Rated Voltage	Rated Cap	Case Code/ Case Size	KEMET Part Number	DC Leakage	DF	ESR	Maximum Allowable Ripple Current (rms)			Maximum Operating Temp	MSL

(1) To complete KEMET part number, insert M for ±20% or K for ±10%. Designates Capacitance tolerance.
(2) To complete KEMET part number, insert T = 100% Matte Tin (Sn)-plated, G = Gold-plated, H = Standard Solder coated (SnPb 5% Pb minimum), N = Non-Magnetic 100% Tin (Sn), M = Non-Magnetic (SnPb). Designates Termination Finish.
Refer to Ordering Information for additional detail.
Higher voltage ratings and tighter tolerance product including ESR may be substituted within the same size at KEMET's option. Voltage substitution will be marked with the higher voltage rating. Substitutions can include better than series.

Downloaded from Arrow.com.

Table 1 – Ratings & Part Number Reference cont.

Rated Voltage	Rated Cap	Case Code/ Case Size	KEMET Part Number	DC Leakage	DF	ESR	Maximum Allowable Ripple Current (rms)			Maximum Operating Temp	MSL
VDC at 85°C	µF	KEMET/EIA	(See below for part options)	µA at +25°C Max/5 Min	% at +25°C 120 Hz Max	mΩ at 25°C 100 kHz Max	mA at +25°C 100 kHz	mA at +85°C 100 kHz	mA at +125°C 100 kHz	°C	Reflow Temp ≤ 260°C
35	4.7	C/6032-28	T495C475(1)035A(2)A700	1.6	6	700	396	356	158	125	1
35	4.7	C/6032-28	T495C475(1)035A(2)A2K0	1.6	6	2,000	234	222	148	125	1
35	4.7	D/7343-31	T495D475(1)035A(2)A300	1.6	6	300	707	636	283	125	1
35	6.8	C/6032-28	T495C685(1)035A(2)A350	2.4	6	350	561	505	224	125	1
35	6.8	D/7343-31	T495D685(1)035A(2)A400	2.4	6	400	612	551	245	125	1
35	6.8	X/7343-43	T495X685(1)035A(2)A300	2.4	4	300	742	668	297	125	1
35	10	D/7343-31	T495D106(1)035A(2)A250	3.5	6	250	775	698	310	125	1
35	10	D/7343-31	T495D106(1)035A(2)A260	3.5	6	260	760	720	480	125	1
35	10	X/7343-43	T495X106(1)035A(2)A260	3.5	4	260	797	717	319	125	1
35	15	D/7343-31	T495D156(1)035A(2)A260	5.3	6	260	760	684	304	125	1
35	15	D/7343-31	T495D156(1)035A(2)A225	5.3	6	225	816	775	516	125	1
35	15	X/7343-43	T495X156(1)035A(2)A260	5.3	6	260	797	717	319	125	1
35	15	X/7343-43	T495X156(1)035A(2)A800	5.3	6	800	454	431	287	125	1
35	22	D/7343-31	T495D226(1)035A(2)A200	7.7	6	200	866	779	346	125	1
35	22	D/7343-31	T495D226(1)035A(2)A260	7.7	6	260	760	684	304	125	1
35	22	D/7343-31	T495D226(1)035A(2)A300	7.7	6	300	707	636	283	125	1
35	22	X/7343-43	T495X226(1)035A(2)A200	7.7	6	200	908	817	363	125	1
35	22	X/7343-43	T495X226(1)035A(2)A260	7.7	6	260	797	717	319	125	1
35	22	X/7343-43	T495X226(1)035A(2)A275	7.7	6	275	775	735	490	125	1
35	33	D/7343-31	T495D336(1)035A(2)A300	11.6	6	300	707	636	283	125	1
35	33	X/7343-43	T495X336(1)035A(2)A260	11.6	6	260	797	717	319	125	1
35	47	X/7343-43	T495X476(1)035A(2)A300	16.5	8	300	742	668	297	125	1
50	0.47	C/6032-28	T495C474(1)050A(2)A7K2	0.5	4	7,200	124	117	78	125	1
50	1	C/6032-28	T495C105(1)050A(2)A1K6	0.5	4	1,600	262	236	105	125	1
50	1	C/6032-28	T495C105(1)050A(2)A4K8	0.5	4	4,800	151	144	96	125	1
50	1.5	C/6032-28	T495C155(1)050A(2)A1K5	0.8	6	1,500	271	244	108	125	1
50	2.2	D/7343-31	T495D225(1)050A(2)A800	1.1	6	800	433	390	173	125	1
50	3.3	D/7343-31	T495D335(1)050A(2)A700	1.7	6	700	463	417	185	125	1
50	4.7	D/7343-31	T495D475(1)050A(2)A300	2.4	6	300	707	636	283	125	1
50	4.7	D/7343-31	T495D475(1)050A(2)A1K2	2.4	6	1,200	354	335	224	125	1
50	4.7	X/7343-43	T495X475(1)050A(2)A300	2.4	4	300	742	704	469	125	1
50	6.8	D/7343-31	T495D685(1)050A(2)A400	3.4	6	400	612	551	245	125	1
50	10	X/7343-43	T495X106(1)050A(2)A250	5.0	6	250	731	325	125	125	1
50	10	X/7343-43	T495X106(1)050A(2)A300	5.0	6	300	742	668	297	125	1
50	10	X/7343-43	T495X106(1)050A(2)A800	5.0	6	800	454	431	287	125	1
50	15	X/7343-43	T495X156(1)050A(2)A300	7.5	6	300	742	668	297	125	1
VDC at 85°C	µF	KEMET/EIA	(See below for part options)	µA at +25°C Max/5 Min	% at +25°C 120 Hz Max	mΩ at 25°C 100 kHz Max	mA at +25°C 100 kHz	mA at +85°C 100 kHz	mA at +125°C 100 kHz	°C	Reflow Temp ≤ 260°C
Rated Voltage	Rated Cap	Case Code/ Case Size	KEMET Part Number	DC Leakage	DF	ESR	Maximum Allowable Ripple Current (rms)			Maximum Operating Temp	MSL

(1) To complete KEMET part number, insert M for ±20% or K for ±10%. Designates Capacitance tolerance.
(2) To complete KEMET part number, insert T = 100% Matte Tin (Sn)-plated, G = Gold-plated, H = Standard Solder coated (SnPb 5% Pb minimum), N = Non-Magnetic 100% Tin (Sn), M = Non-Magnetic (SnPb). Designates Termination Finish.
Refer to Ordering Information for additional detail.
Higher voltage ratings and tighter tolerance product including ESR may be substituted within the same size at KEMET's option. Voltage substitution will be marked with the higher voltage rating. Substitutions can include better than series.

Downloaded from Arrow.com.

Recommended Voltage Derating Guidelines

	−55°C to 85°C	85°C to 125°C
% Change in working DC voltage with temperature	V_R	67% of V_R
Recommended maximum application voltage	50% of V_R	33% of V_R

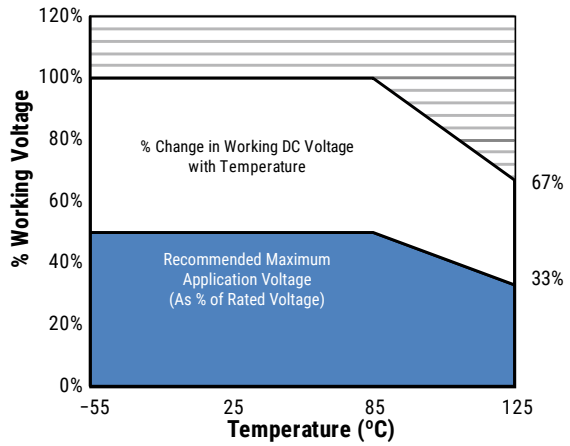

Ripple Current/Ripple Voltage

Permissible AC ripple voltage and current are related to equivalent series resistance (ESR) and the power dissipation capabilities of the device. Permissible AC ripple voltage which may be applied is limited by two criteria:

1. The positive peak AC voltage plus the DC bias voltage, if any, must not exceed the DC voltage rating of the capacitor.
2. The negative peak AC voltage in combination with bias voltage, if any, must not exceed the allowable limits specified for reverse voltage. See the Reverse Voltage section for allowable limits.

The maximum power dissipation by case size can be determined using the table at right. The maximum power dissipation rating stated in the table must be reduced with increasing environmental operating temperatures. Refer to the table below for temperature compensation requirements.

Temperature Compensation Multipliers for Maximum Ripple Current		
T ≤ 25°C	T ≤ 85°C	T ≤ 125°C
1.00	0.90	0.40

T= Environmental Temperature

The maximum power dissipation rating must be reduced with increasing environmental operating temperatures. Refer to the Temperature Compensation Multiplier table for details.

KEMET Series and Case Code	EIA Case Code	Maximum Power Dissipation (P max) mWatts at 25°C with +20°C Rise
A	3216–18	75
B	3528–21	85
C	6032–28	110
D	7343–31	150
X	7343–43	165
E	7360–38	200
S	3216–12	60
T	3528–12	70
U	6032–15	90
V	7343–20	125
T510X	7343–43	270
T510E	7360–38	285

Using the P max of the device, the maximum allowable rms ripple current or voltage may be determined.

$I(max) = \sqrt{P\ max/R}$
$E(max) = Z\sqrt{P\ max/R}$

I = rms ripple current (amperes)
E = rms ripple voltage (volts)
P max = maximum power dissipation (watts)
R = ESR at specified frequency (ohms)
Z = Impedance at specified frequency (ohms)

Downloaded from Arrow.com.

Reverse Voltage

Solid tantalum capacitors are polar devices and may be permanently damaged or destroyed if connected with the wrong polarity. The positive terminal is identified on the capacitor body by a stripe plus in some cases a beveled edge. A small degree of transient reverse voltage is permissible for short periods per the table. The capacitors should not be operated continuously in reverse mode, even within these limits.

Temperature	Permissible Transient Reverse Voltage
25°C	15% of Rated Voltage
85°C	5% of Rated Voltage
125°C	1% of Rated Voltage

Table 2 – Land Dimensions/Courtyard

KEMET	Metric Size Code	Density Level A: Maximum (Most) Land Protrusion (mm)					Density Level B: Median (Nominal) Land Protrusion (mm)					Density Level C: Minimum (Least) Land Protrusion (mm)				
Case	EIA	W	L	S	V1	V2	W	L	S	V1	V2	W	L	S	V1	V2
A	3216–18	1.35	2.20	0.62	6.02	2.80	1.23	1.80	0.82	4.92	2.30	1.13	1.42	0.98	4.06	2.04
B	3528–21	2.35	2.21	0.92	6.32	4.00	2.23	1.80	1.12	5.22	3.50	2.13	1.42	1.28	4.36	3.24
C	6032–28	2.35	2.77	2.37	8.92	4.50	2.23	2.37	2.57	7.82	4.00	2.13	1.99	2.73	6.96	3.74
D	7343–31	2.55	2.77	3.67	10.22	5.60	2.43	2.37	3.87	9.12	5.10	2.33	1.99	4.03	8.26	4.84
E[1]	7360–38	4.25	2.77	3.67	10.22	7.30	4.13	2.37	3.87	9.12	6.80	4.03	1.99	4.03	8.26	6.54
T	3528–12	2.35	2.20	0.92	6.32	4.00	2.23	1.80	1.12	5.22	3.50	2.13	1.42	1.28	4.36	3.24
V	7343–21	2.55	2.77	3.67	10.22	5.60	2.43	2.37	3.87	9.12	5.10	2.33	1.99	4.03	8.26	4.84
X[1]	7343–43	2.55	2.77	3.67	10.22	5.60	2.43	2.37	3.87	9.12	5.10	2.33	1.99	4.03	8.26	4.84

Density Level A: *For low-density product applications. Recommended for wave solder applications and provides a wider process window for reflow solder processes.*
Density Level B: *For products with a moderate level of component density. Provides a robust solder attachment condition for reflow solder processes.*
Density Level C: *For high component density product applications. Before adapting the minimum land pattern variations the user should perform qualification testing based on the conditions outlined in IPC standard 7351 (IPC–7351).*
[1] Height of these chips may create problems in wave soldering.
[2] Land pattern geometry is too small for silkscreen outline.

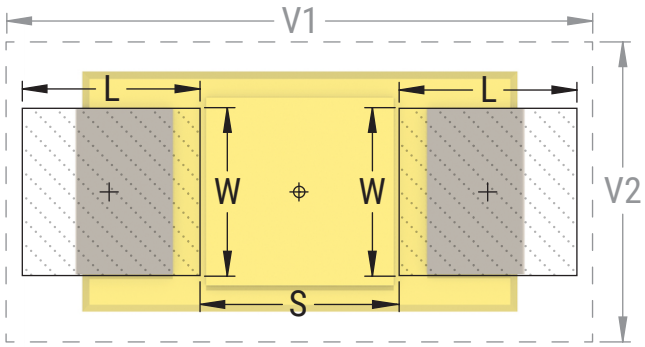

Grid Placement Courtyard

Downloaded from Arrow.com.

Soldering Process

The KEMET families of surface mount capacitors are compatible with wave (single or dual), convection, IR, or vapor phase reflow techniques. Preheating of these components is recommended to avoid extreme thermal stress. KEMET's recommended profile conditions for convection and IR reflow reflect the profile conditions of the IPC/J–STD–020D standard for moisture sensitivity testing. The devices can safely withstand a maximum of three reflow passes at these conditions.

Please note that although the X/7343–43 case size can withstand wave soldering, the tall profile (4.3 mm maximum) dictates care in wave process development.

Hand soldering should be performed with care due to the difficulty in process control. If performed, care should be taken to avoid contact of the soldering iron to the molded case. The iron should be used to heat the solder pad, applying solder between the pad and the termination, until reflow occurs. Once reflow occurs, the iron should be removed immediately. "Wiping" the edges of a chip and heating the top surface is not recommended.

During typical reflow operations, a slight darkening of the gold-colored epoxy may be observed. This slight darkening is normal and not harmful to the product. Marking permanency is not affected by this change.

Profile Feature	SnPb Assembly	Pb-Free Assembly
Preheat/Soak		
Temperature Minimum (T_{Smin})	100°C	150°C
Temperature Maximum (T_{Smax})	150°C	200°C
Time (t_s) from T_{smin} to T_{smax})	60 – 120 seconds	60 – 120 seconds
Ramp-up Rate (T_L to T_P)	3°C/second maximum	3°C/second maximum
Liquidous Temperature (T_L)	183°C	217°C
Time Above Liquidous (t_L)	60 – 150 seconds	60 – 150 seconds
Peak Temperature (T_P)	220°C* 235°C**	250°C* 260°C**
Time within 5°C of Maximum Peak Temperature (t_P)	20 seconds maximum	30 seconds maximum
Ramp-down Rate (T_P to T_L)	6°C/second maximum	6°C/second maximum
Time 25°C to Peak Temperature	6 minutes maximum	8 minutes maximum

Note: All temperatures refer to the center of the package, measured on the package body surface that is facing up during assembly reflow.
** For Case Size height > 2.5 mm*
*** For Case Size height ≤ 2.5 mm*

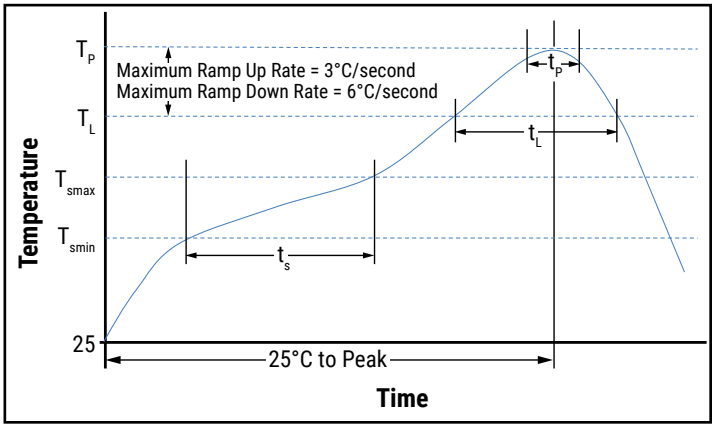

Storage

Tantalum chip capacitors should be stored in normal working environments. While the chips themselves are quite robust in other environments, solderability will be degraded by exposure to high temperatures, high humidity, corrosive atmospheres, and long term storage. In addition, packaging materials will be degraded by high temperature – reels may soften or warp and tape peel force may increase. KEMET recommends that maximum storage temperature not exceed 40°C and maximum storage humidity not exceed 60% relative humidity. Temperature fluctuations should be minimized to avoid condensation on the parts and atmospheres should be free of chlorine and sulphur bearing compounds. For optimized solderability, chip stock should be used promptly, preferably within three years of receipt.

Downloaded from Arrow.com.

Construction

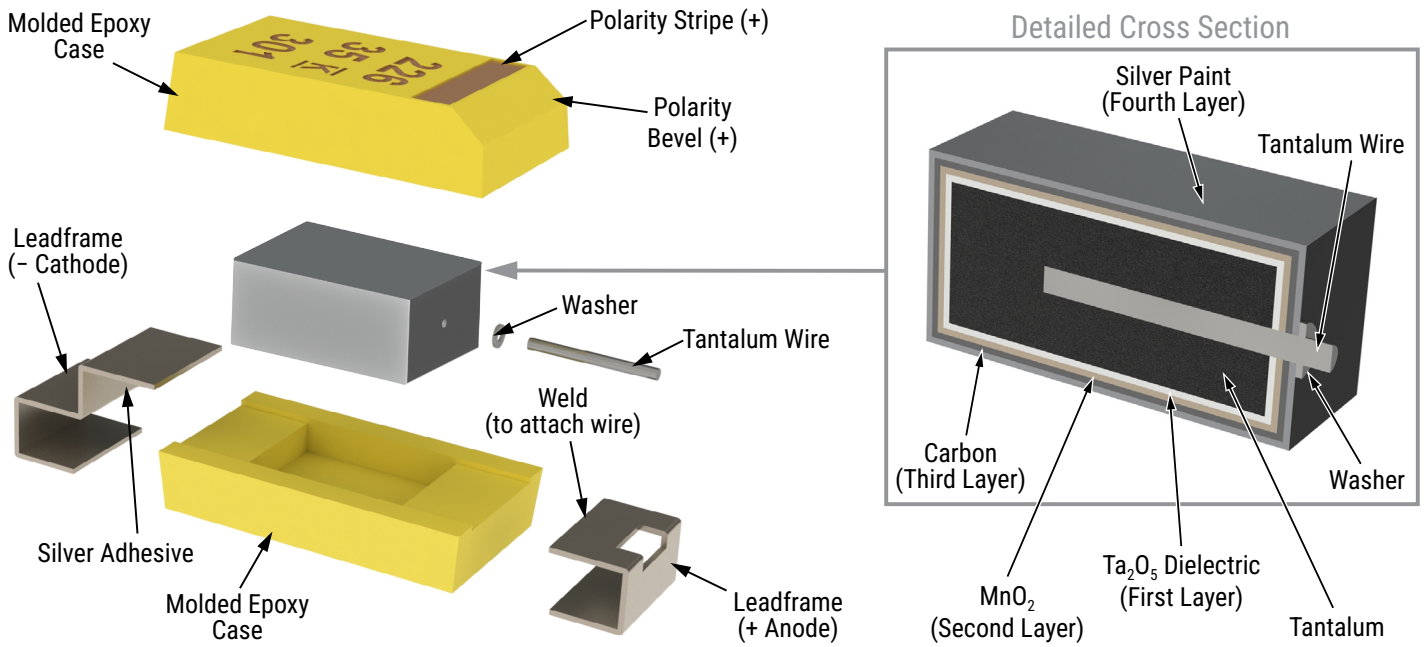

Capacitor Marking

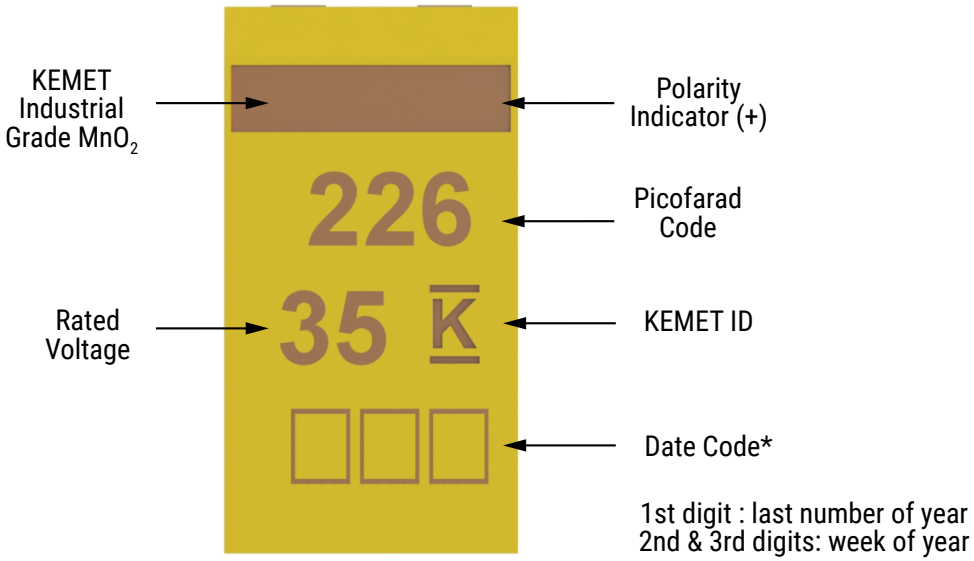

Downloaded from Arrow.com.

Tape & Reel Packaging Information

KEMET's molded chip capacitor families are packaged in 8 and 12 mm plastic tape on 7" and 13" reels in accordance with *EIA Standard 481*: Embossed Carrier Taping of Surface Mount Components for Automatic Handling. This packaging system is compatible with all tape-fed automatic pick-and-place systems.

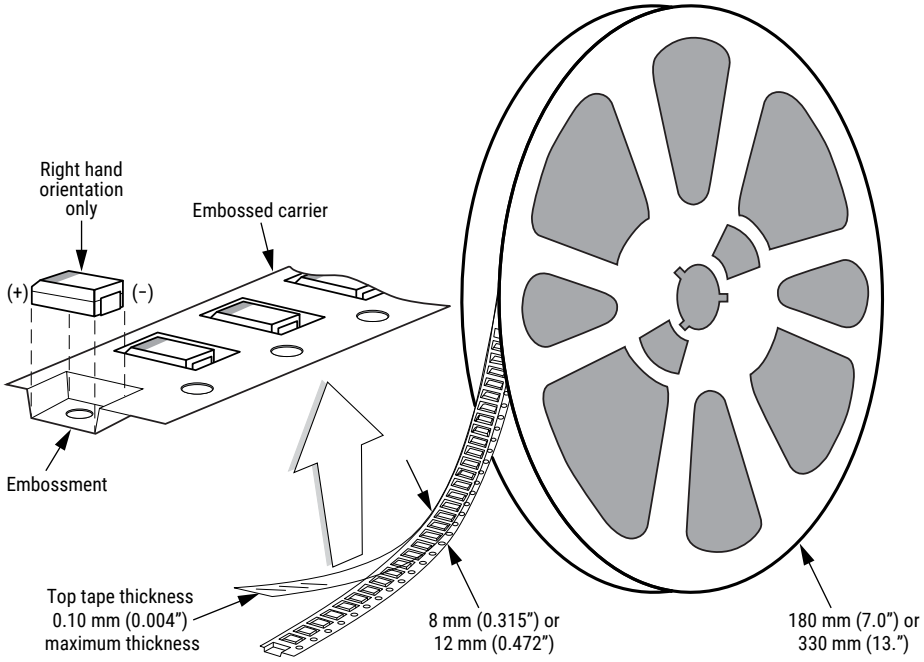

Table 3 – Packaging Quantity

Case Code		Tape Width (mm)	7" Reel*	13" Reel*
KEMET	EIA			
S	3216-12	8	2,500	10,000
T	3528-12	8	2,500	10,000
M	3528-15	8	2,500	8,000
U	6032-15	12	1,000	5,000
L	6032-19	12	1,000	3,000
W	7343-15	12	1,000	3,000
Z	7343-17	12	1,000	3,000
V	7343-20	12	1,000	3,000
A	3216-18	8	2,000	9,000
B	3528-21	8	2,000	8,000
C	6032-28	12	500	3,000
D	7343-31	12	500	2,500
Q	7343-12	12	1,000	3,000
Y	7343-40	12	500	2,000
X	7343-43	12	500	2,000
E/T428P	7360-38	12	500	2,000
H	7360-20	12	1,000	2,500
O	7360-43	12	250	1,000

** No C-Spec required for 7" reel packaging. C-7280 required for 13" reel packaging.*

Downloaded from Arrow.com.

Figure 1 – Embossed (Plastic) Carrier Tape Dimensions

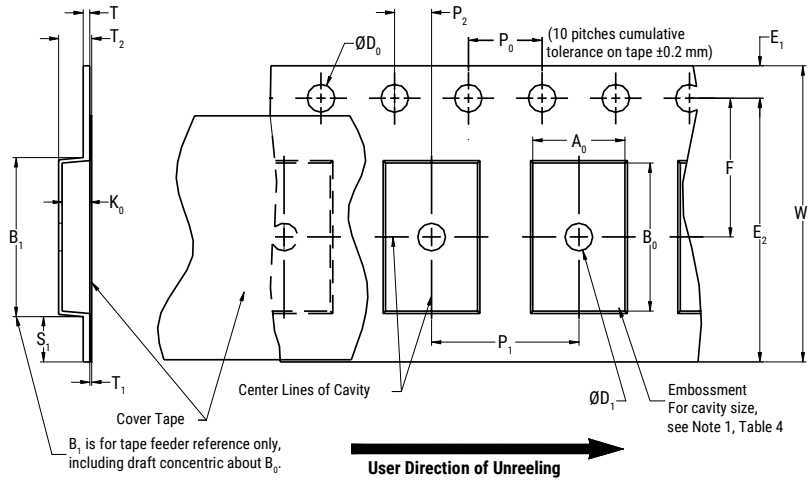

Table 4 – Embossed (Plastic) Carrier Tape Dimensions

Metric will govern

Constant Dimensions — Millimeters (Inches)									
Tape Size	D_0	D_1 Minimum Note 1	E_1	P_0	P_2	R Reference Note 2	S_1 Minimum Note 3	T Maximum	T_1 Maximum
8 mm	1.5 +0.10/−0.0 (0.059 +0.004/−0.0)	1.0 (0.039)	1.75 ±0.10 (0.069 ±0.004)	4.0 ±0.10 (0.157 ±0.004)	2.0 ±0.05 (0.079 ±0.002)	25.0 (0.984)	0.600 (0.024)	0.600 (0.024)	0.100 (0.004)
12 mm		1.5 (0.059)				30 (1.181)			

Variable Dimensions — Millimeters (Inches)								
Tape Size	Pitch	B_1 Maximum Note 4	E_2 Minimum	F	P_1	T_2 Maximum	W Maximum	A_0, B_0 & K_0
8 mm	Single (4 mm)	4.35 (0.171)	6.25 (0.246)	3.5 ±0.05 (0.138 ±0.002)	4.0 ±0.10 (0.157 ±0.004)	2.5 (0.098)	8.3 (0.327)	Note 5
12 mm	Single (4 mm) and Double (8 mm)	8.2 (0.323)	10.25 (0.404)	5.5 ±0.05 (0.217 ±0.002)	4.0 ±0.10 (0.157 ±0.004) or 8.0 ±0.10 (0.315 ±0.004)	4.6 (0.181)	12.3 (0.484)	

1. *The embossment hole location shall be measured from the sprocket hole controlling the location of the embossment. Dimensions of embossment location and hole location shall be applied independent of each other.*
2. *The tape, with or without components, shall pass around R without damage (see Figure 4).*
3. *If S_1 < 1.0 mm, there may not be enough area for cover tape to be properly applied (see EIA Standard 481–D, paragraph 4.3, section b).*
4. *B_1 dimension is a reference dimension for tape feeder clearance only.*
5. *The cavity defined by A_0, B_0 and K_0 shall surround the component with sufficient clearance that:*
   (a) the component does not protrude above the top surface of the carrier tape.
   (b) the component can be removed from the cavity in a vertical direction without mechanical restriction, after the top cover tape has been removed.
   (c) rotation of the component is limited to 20° maximum for 8 and 12 mm tapes (see Figure 2).
   (d) lateral movement of the component is restricted to 0.5 mm maximum for 8 mm and 12 mm wide tape (see Figure 3).
   (e) see Addendum in EIA Standard 481–D for standards relating to more precise taping requirements.

Downloaded from Arrow.com.

Packaging Information Performance Notes

1. Cover tape break force: 1.0 kg minimum.
2. Cover tape peel strength: The total peel strength of the cover tape from the carrier tape shall be:

Tape Width	Peel Strength
8 mm	0.1 to 1.0 newton (10 to 100 gf)
12 mm	0.1 to 1.3 newton (10 to 130 gf)

The direction of the pull shall be opposite the direction of the carrier tape travel. The pull angle of the carrier tape shall be 165° to 180° from the plane of the carrier tape. During peeling, the carrier and/or cover tape shall be pulled at a velocity of 300 ±10 mm/minute.
3. Labeling: Bar code labeling (standard or custom) shall be on the side of the reel opposite the sprocket holes. *Refer to EIA Standards 556 and 624*.

Figure 2 – Maximum Component Rotation

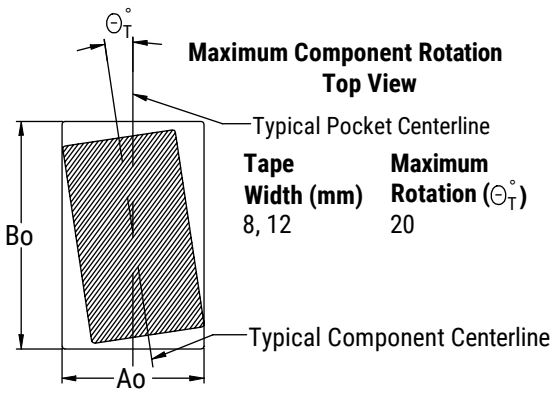

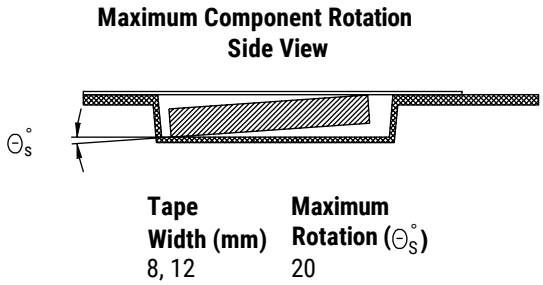

Figure 3 – Maximum Lateral Movement

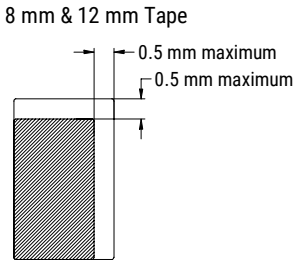

Figure 4 – Bending Radius

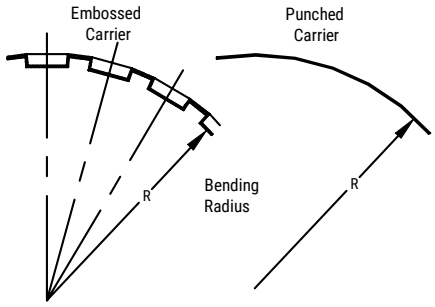

Downloaded from Arrow.com.

Figure 5 – Reel Dimensions

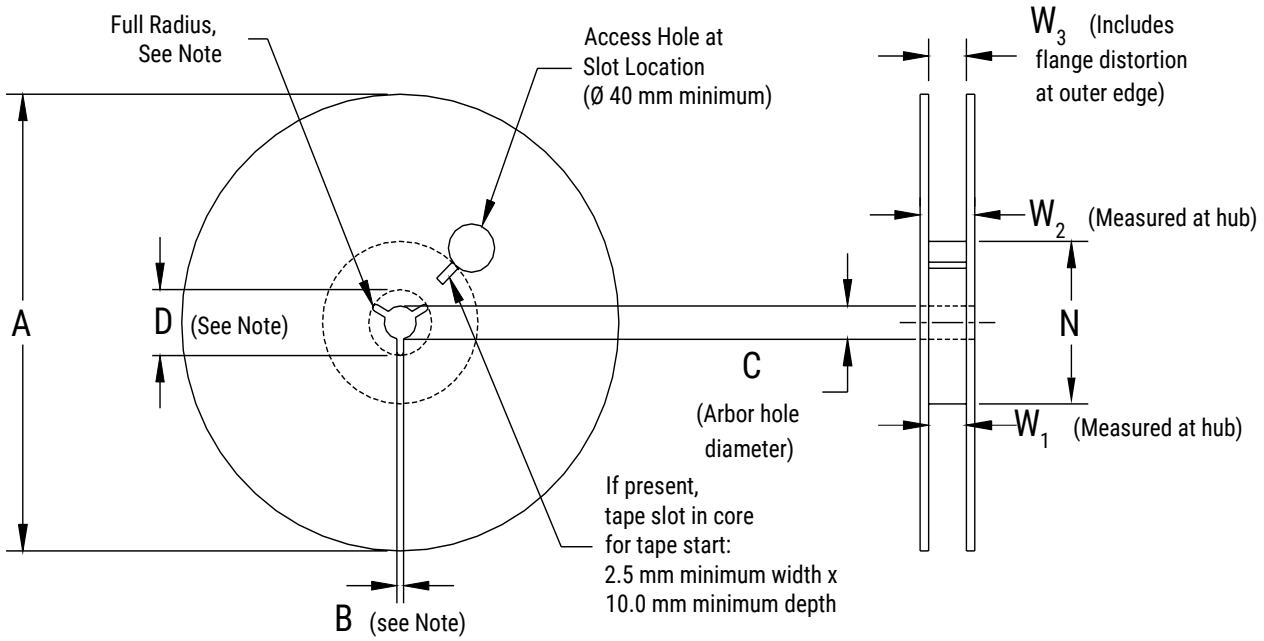

Note: Drive spokes optional; if used, dimensions B and D shall apply.

Table 5 – Reel Dimensions

Metric will govern

Constant Dimensions — Millimeters (Inches)				
Tape Size	A	B Minimum	C	D Minimum
8 mm	178 ±0.20 (7.008 ±0.008) or 330 ±0.20 (13.000 ±0.008)	1.5 (0.059)	13.0 +0.5/−0.2 (0.521 +0.02/−0.008)	20.2 (0.795)
12 mm				

Variable Dimensions — Millimeters (Inches)				
Tape Size	N Minimum	W_1	W_2 Maximum	W_3
8 mm	50 (1.969)	8.4 +1.5/−0.0 (0.331 +0.059/−0.0)	14.4 (0.567)	Shall accommodate tape width without interference
12 mm		12.4 +2.0/−0.0 (0.488 +0.078/−0.0)	18.4 (0.724)	

Downloaded from Arrow.com.

Figure 6 – Tape Leader & Trailer Dimensions

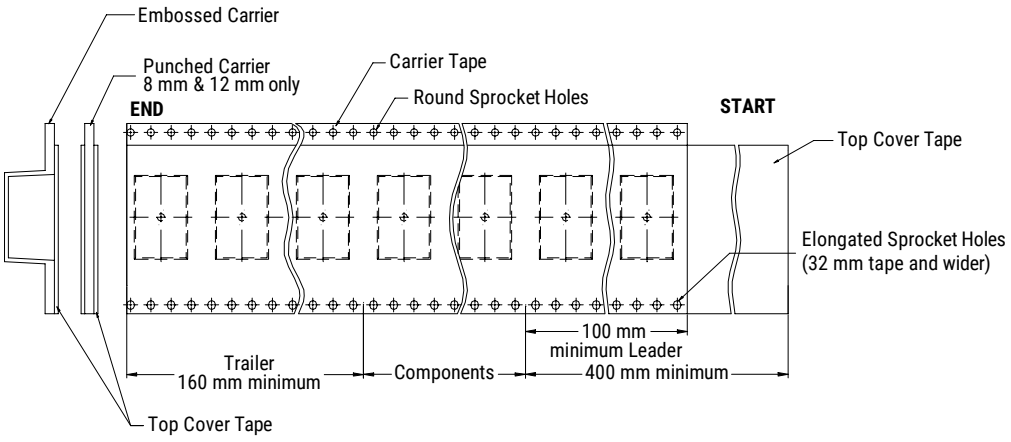

Figure 7 – Maximum Camber

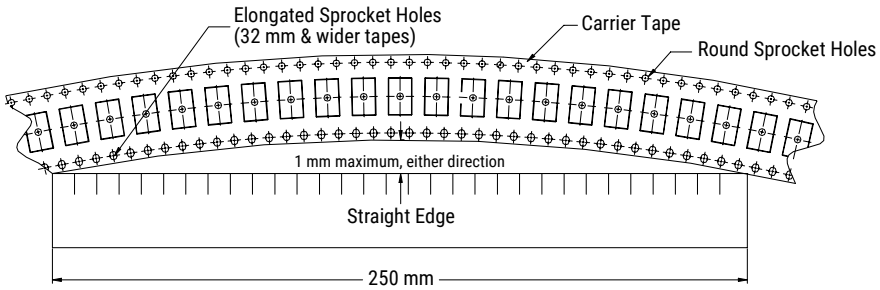

Downloaded from Arrow.com.

KEMET Electronics Corporation Sales Offices

For a complete list of our global sales offices, please visit https://www.yageogroup.com/SalesResources/SalesOffices

Disclaimer

YAGEO Corporation and its affiliates do not recommend the use of commercial or automotive grade products for high reliability applications or manned space flight.

All product specifications, statements, information and data (collectively, the "Information") in this datasheet are subject to change. The customer is responsible for checking and verifying the extent to which the Information contained in this publication is applicable to an order at the time the order is placed. All Information given herein is believed to be accurate and reliable, but it is presented without guarantee, warranty, or responsibility of any kind, expressed or implied.

Statements of suitability for certain applications are based on KEMET Electronics Corporation's ("KEMET") knowledge of typical operating conditions for such applications, but are not intended to constitute – and KEMET specifically disclaims – any warranty concerning suitability for a specific customer application or use. The Information is intended for use only by customers who have the requisite experience and capability to determine the correct products for their application. Any technical advice inferred from this Information or otherwise provided by KEMET with reference to the use of KEMET's products is given gratis, and KEMET assumes no obligation or liability for the advice given or results obtained.

Although KEMET designs and manufactures its products to the most stringent quality and safety standards, given the current state of the art, isolated component failures may still occur. Accordingly, customer applications which require a high degree of reliability or safety should employ suitable designs or other safeguards (such as installation of protective circuitry or redundancies) in order to ensure that the failure of an electrical component does not result in a risk of personal injury or property damage.

Although all product–related warnings, cautions and notes must be observed, the customer should not assume that all safety measures are indicated or that other measures may not be required.

KEMET is a registered trademark of KEMET Electronics Corporation.

Downloaded from Arrow.com.