23AA04M/23LCV04M

4-Mbit SPI/SDI/SQI 143 Mhz Serial RAM with Optional Battery Backup

Device Selection Table

Part Number	Vcc Range	Temp. Ranges	Battery Backup	Power-Up State Mode	Packages
23AA04M	1.7V-3.6V	I	No	SPI	SN, ST, P
23LCV04M	2.2V-3.6V	I	Yes	SPI	SL, ST, P

Note: 23AA04M is only available in 8-lead while 23LCV04M is only available in 14-lead.

Features

- 4,096-Kbit Low-Power SRAM
- Single Voltage Read and Write Operations
  - 1.7V to 3.6V (23AA04M)
  - 2.2V to 3.6V (23LCV04M)
- Serial Interface Architecture
  - SPI compatible: mode 0 and mode 3
  - SDI and SQI supported
- High-Speed Clock Frequency:
  - 143 MHz
- Superior Reliability
  - Built-In Error Correction Code (ECC) Logic
- Low-Power Consumption:
  - Active read current: 6 mA (max @ 40MHz, 3.6V) for SPI/SDI/SQI
  - Standby Current: 140 µA (typical @ 25°C)
- Unlimited Read and Write Cycles
- External Battery Backup Support (23LCV04M)
- Zero Write Time
- Organization
  - 256 x 8-bit Organization
  - User selectable page size (32 bytes or 256 bytes)
- Byte, Page and Sequential Mode for Reads and Writes
- Temperature Ranges Supported:
  - Industrial (I): -40°C to +85°C
- RoHS Compliant, Halogen Free

Packages

- 8-Lead PDIP, 8-Lead SOIC and 8-Lead TSSOP
- 14-Lead PDIP, 14-Lead SOIC and 14-Lead TSSOP

Description

The Microchip Technology Inc. 23XX04M[1] is a 4-Mbit Serial SRAM device. The memory is accessed via a simple Serial Peripheral Interface (SPI) compatible serial bus. The bus signals required are a clock input (SCK) plus separate data in (SI) and data out (SO) lines. Access to the device is controlled through a Chip Select (CS) input. Additionally, SDI (Serial Dual Interface) and SQI (Serial Quad Interface) are supported if your application needs faster data rates.

This device also supports unlimited reads and writes to the memory array.

Note 1: 23XX04M is used in this document as a generic part number for the 23AA04M/23LCV04M devices.

Pin Function Table

Name	Function
$\overline{CS}$	Chip Select Input Pin
SO/SIO1	Serial Output/SDI/SQI Pin
SIO2	SQI Pin
VSS	Ground Pin
SI/SIO0	Serial Input/SDI/SQI Pin
SCK	Serial Clock Pin
$\overline{HOLD}$/SIO3	Hold/SQI Pin
VBAT	External Backup Supply Input
Vcc	Power Supply
NC	No Connect

Package Types (not to scale)

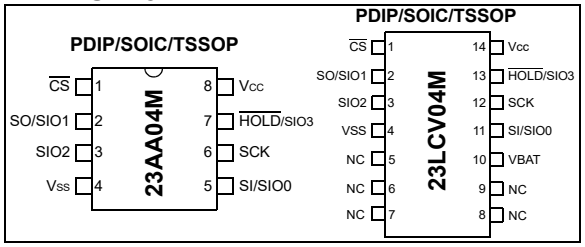

© 2024 Microchip Technology Inc. and its subsidiaries

Downloaded from Arrow.com.

1.0 ELECTRICAL CHARACTERISTICS

Absolute Maximum Ratings (†)

VCC 3.9V

All Inputs and Outputs w.r.t. VSS ..... -0.3V to VCC +0.3V

Storage Temperature ..... -65°C to +150°C

Ambient Temperature under Bias ..... -40°C to +85°C

ESD protection on all pins ..... 2 kV

† NOTICE: Stresses above those listed under "Absolute Maximum Ratings" may cause permanent damage to the device. This is a stress rating only and functional operation of the device at those or any other conditions above those indicated in the operational listings of this specification is not implied. Exposure to maximum rating conditions for an extended period of time may affect device reliability.

1.1 Power-Up Specifications

All functionalities and DC specifications are included for a VDD ramp rate of greater than 1V per 100 ms (0V to 3.0V in less than 300 ms). See Table 1-1 and Figure 1-1 for more information.

When VDD drops from the operating voltage to below the minimum VDD threshold at power-down, all operations are disabled and the device does not respond to commands (see Figure 1-2).

TABLE 1-1: RECOMMENDED SYSTEM POWER-UP/DOWN TIMINGS

Symbol	Parameter	Minimum	Max	Units	Condition
TPU-READ(1)	VDD Min to Read operation	100		µs	
TPU-WRITE(1)	VDD Min to Write operation	100		µs	
TPD(1)	Power-down duration	1		ms	
VOFF(1)	VDD off voltage		0.2	V	0V recommended

Note 1: This parameter is not tested but is ensured by characterization.

FIGURE 1-1: POWER-UP TIMING DIAGRAM

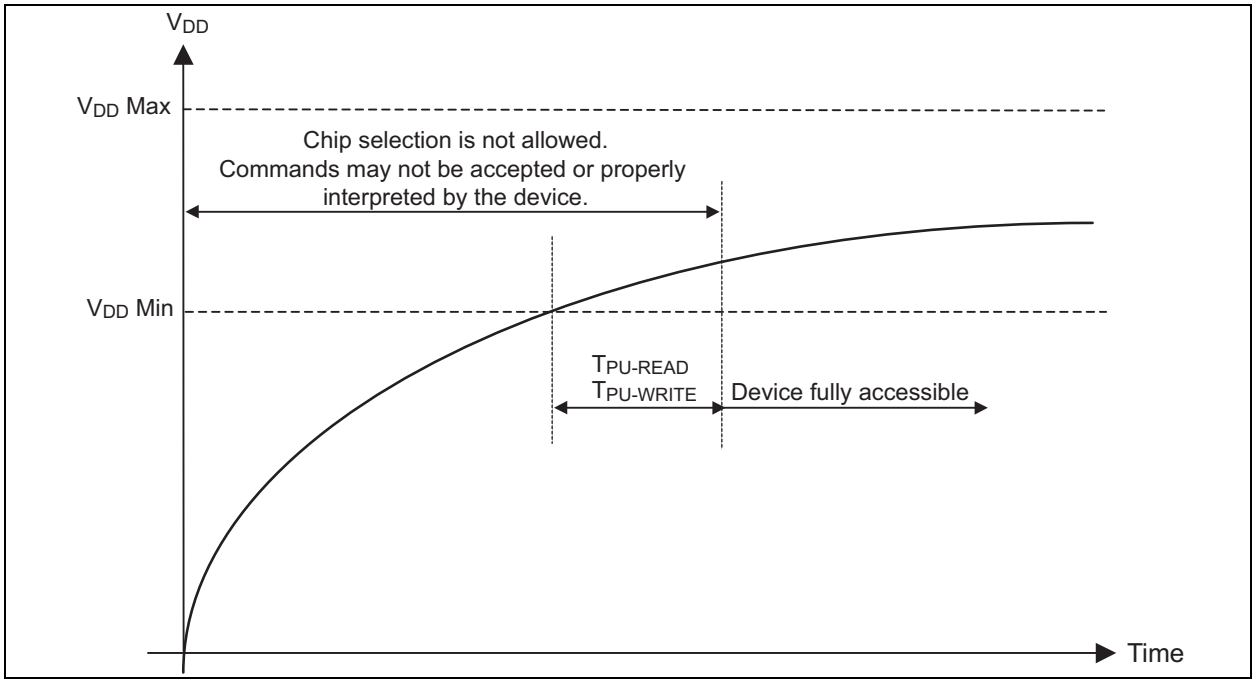

© 2024 Microchip Technology Inc. and its subsidiaries

Downloaded from Arrow.com.

FIGURE 1-2: POWER-DOWN AND VOLTAGE DROP DIAGRAM

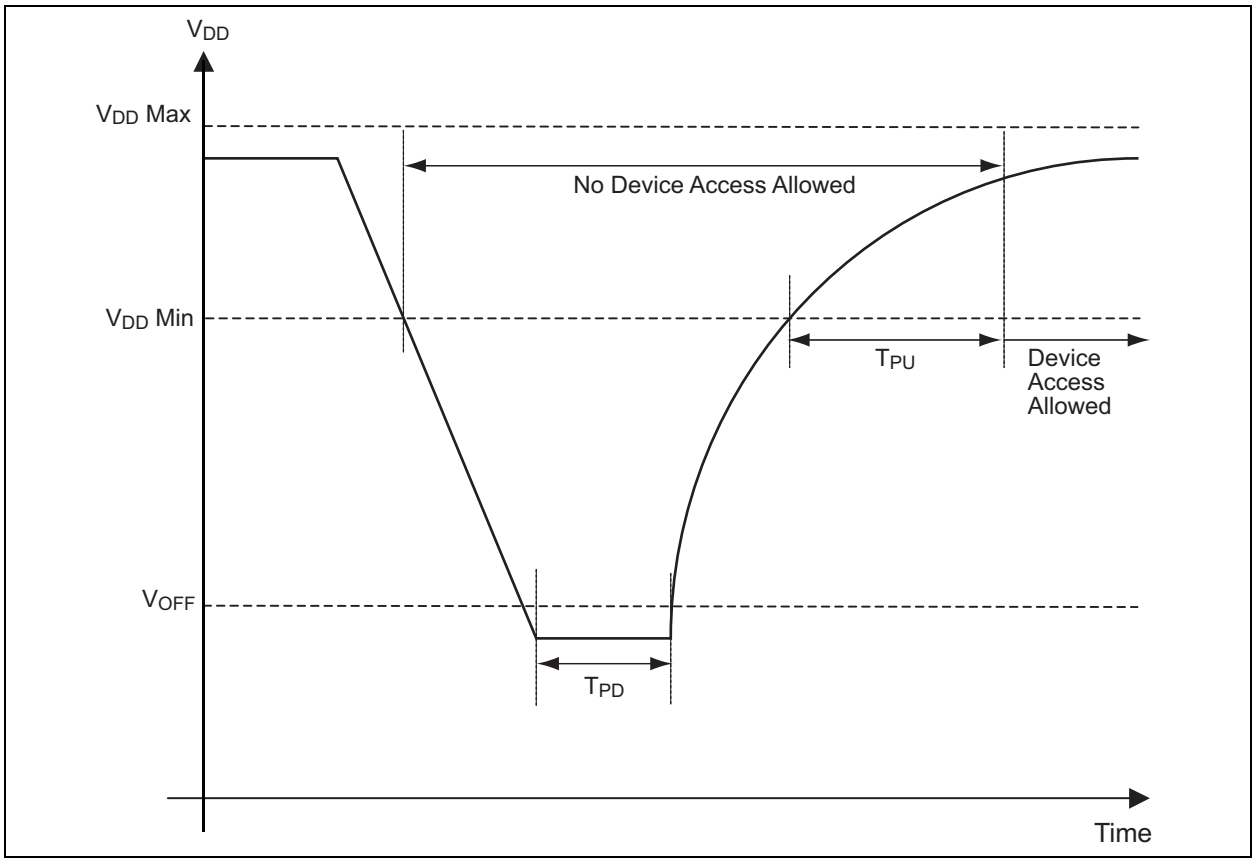

TABLE 1-2: DC CHARACTERISTICS

DC CHARACTERISTICS			Industrial (I): TA = -40°C to +85°C				
Param. No.	**Sym.**	**Characteristic**	**Min.**	**Typ.**	**Max.**	**Units**	**Test Conditions**
D001	VCC	Supply Voltage	1.7	—	3.6	V	23AA04M
			2.2		3.6	V	23LCV04M
D002	VIH	High-level Input Voltage	0.7 VCC	—	—	V	
D003	VIL	Low-level Input Voltage	—	—	0.3 VCC	V	
D004	VOL	Low-level Output Voltage	—	—	0.4	V	IOL = 6 mA
D005	VOH	High-level Output Voltage	VCC - 0.5	—	—	V	IOH = -400 µA
D006	ILI	Input Leakage Current	—	—	1	µA	$\overline{CS}$ = VCC, VIN = VSS OR VCC
D007	ILO	Output Leakage Current	—	—	1	µA	$\overline{CS}$ = VCC, VOUT = VSS OR VCC

Note 1: Typical measurements taken at room temperature (+25°C).

2: This parameter is periodically sampled and not 100% tested.Typical measurements taken at room temperature.

3: This is the limit to which VCC can be lowered without losing RAM data at TA = +25°C. This parameter is periodically sampled and not 100% tested.

© 2024 Microchip Technology Inc. and its subsidiaries

Downloaded from Arrow.com.

DC CHARACTERISTICS			Industrial (I): TA = -40°C to +85°C				
Param. No.	Sym.	Characteristic	Min.	Typ.	Max.	Units	Test Conditions
D008	IDDR	Operating Current	—	—	6	mA	VCC = 3.6V; SO = O, FCLK = 40 MHz
					20	mA	VCC = 3.6V; SO = O, FCLK = 143 MHz
D009	ISB1	Standby Current	—	140	500	µA	$\overline{CS}$ = VCC, Inputs tied to VCC or VSS, TA = 85°C (Note 1)
D010	CINT	Input Capacitance	—	—	7	pF	VCC = 3.6V, f = 1 MHz, T_A = 25°C (Note 2)
D011	VDR	RAM Data Retention Voltage	—	1.0	—	V	Note 3
D012	VTRIP	VBAT Change Over	1.75	1.85	1.95	V	Note 2
D013	VBAT	VBAT Voltage Range	1.4	—	3.6	V	Note 2
D014	IBAT1	VBAT Current	—	140	500	µA	$\overline{CS}$ = VCC, Inputs tied to VCC or VSS, TA = 85°C (Note 1)

Note 1: Typical measurements taken at room temperature (+25°C).

2: This parameter is periodically sampled and not 100% tested.Typical measurements taken at room temperature.

3: This is the limit to which VCC can be lowered without losing RAM data at TA = +25°C. This parameter is periodically sampled and not 100% tested.

TABLE 1-3: AC CHARACTERISTICS

AC CHARACTERISTICS			Industrial (I): TA = -40°C to +85°C					
Param. No.	Sym.	Characteristic	40 MHz		143 MHz		Units	Test Conditions
			Min.	Max.	Min.	Max.		
1	FCLK	Clock Frequency	—	40	—	143	MHz	Note 1
2	TCSS	$\overline{CS}$ Setup Time	5	—	3	—	ns	Note 2
3	TCSH	$\overline{CS}$ Hold Time	5	—	3	—	ns	Note 3
4	TCSD	$\overline{CS}$ Disable Time	20	—	10	—	ns	
5	TSU	Data Setup Time	5	—	2	—	ns	
6	THD	Data Hold Time	5	—	2	—	ns	
7	TR	CLK Rise Time	0.1	—	0.1	—	ns	Note 2 and Note 4
8	TF	CLK Fall Time	0.1	—	0.1	—	ns	Note 2 and Note 4
9	THI	Clock High Time	10	—	2.8	—	ns	
10	TLO	Clock Low Time	10	—	2.8	—	ns	
11	TCLD	Clock Delay Time	5	—	3	—	ns	
12	TV	Output Valid from Clock Low	—	8	—	7	ns	
13	THO	Output Hold Time	0	—	0	—	ns	Note 4
14	TDIS	Output Disable Time	—	9	—	9	ns	

Note 1: Maximum clock frequency for Read Instruction, 03H, is 40 MHz.

2: Maximum Rise and Fall Time may be limited by THI and TLO requirements.

3: Relative to SCK.

4: This parameter is periodically sampled and not 100% tested. Typical measurements taken at room temperature (25°C).

© 2024 Microchip Technology Inc. and its subsidiaries

Downloaded from Arrow.com.

TABLE 1-3: AC CHARACTERISTICS

AC CHARACTERISTICS			Industrial (I): TA = -40°C to +85°C					
Param. No.	Sym.	Characteristic	40 MHz		143 MHz		Units	Test Conditions
			Min.	Max.	Min.	Max.		
15	TCLZ	SCK Low to Output Low-Z	0	—	0	—	ns	
16	TCHH	$\overline{CS}$ Not Active Hold Time	5	—	3	—	ns	Note 3
17	THS	$\overline{HOLD}$ Setup Time	5	—	1.4	—	ns	
18	THH	$\overline{HOLD}$ Hold Time	5	—	1.4	—	ns	
19	THZ	$\overline{HOLD}$ Low to Output High-Z	—	9	—	9	ns	
20	THV	$\overline{HOLD}$ High to Output Valid	—	9	—	9	ns	

Note 1: Maximum clock frequency for Read Instruction, 03H, is 40 MHz.

2: Maximum Rise and Fall Time may be limited by THI and TLO requirements.

3: Relative to SCK.

4: This parameter is periodically sampled and not 100% tested. Typical measurements taken at room temperature (25°C).

TABLE 1-4: AC TEST CONDITIONS

AC Waveform	
Input Pulse Level	0.1 VCC to 0.9 VCC
Input Rise/Fall Time	5 ns
C_L = 30 pF	—
Timing Measurement Reference Level	
Input	0.5 VCC
Output	0.5 VCC

FIGURE 1-3: SERIAL INPUT TIMING

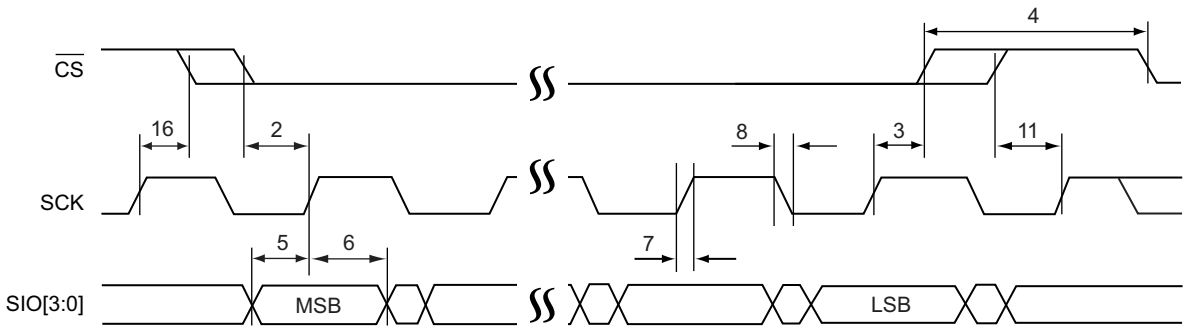

Downloaded from Arrow.com.

FIGURE 1-4: SERIAL OUTPUT TIMING

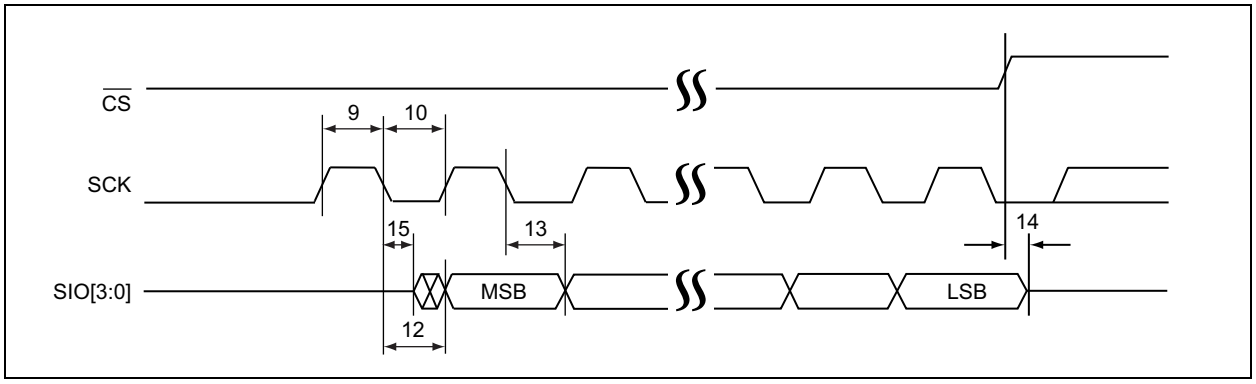

FIGURE 1-5: HOLD TIMING

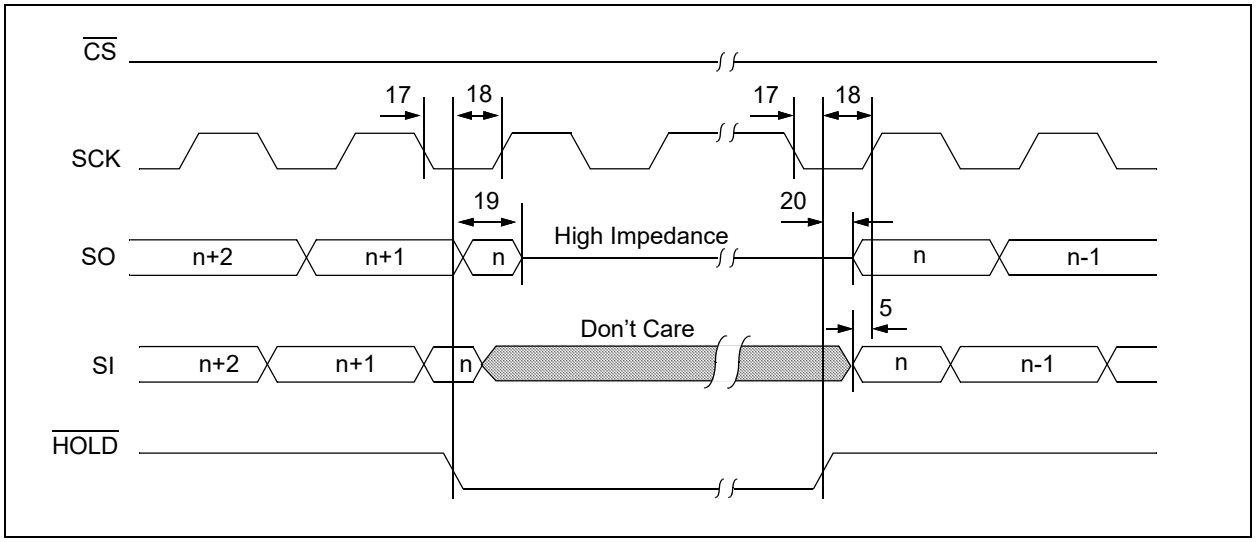

© 2024 Microchip Technology Inc. and its subsidiaries

Downloaded from Arrow.com.

2.0 PIN DESCRIPTION

The description of the pins is listed in Table 2-1.

TABLE 2-1: PIN FUNCTION TABLE

8-Lead SOIC/PDIP/TSSOP	14-Lead SOIC/PDIP/TSSOP	Pin Name	Pin Function
1	1	$\overline{CS}$	Chip Select
2	2	SO/SIO1	Serial Output, I/O in Dual and Quad mode
3	3	SIO2	Quad I/O Pin in Quad mode
4	4	VSS	Ground
5	11	SI/SIO0	Serial Input, I/O in Dual and Quad mode
6	12	SCK	Serial Clock
7	13	$\overline{HOLD}$/SIO3	$\overline{HOLD}$ Pin in SPI/SDI, I/O Pin in Quad mode
8	14	VCC	+1.7V to +3.6V Power Supply **(23AA04M)**, +2.2V to +3.6V Power Supply **(23LCV04M)**
—	5, 6, 7, 8, 9	NC	No Connect
—	10	VBAT	External Battery Supply Input

2.1 Chip Select ($\overline{CS}$)

A low level on this pin selects the device. A high level deselects the device and forces it into Standby mode. When the device is deselected, SO goes to the high impedance state, allowing multiple parts to share the same SPI bus. After power-up, a low level on $\overline{CS}$ is required prior to any sequence being initiated.

2.2 SO/SIO1

The SO pin is used to transfer data out of the device. During a read cycle, data are shifted out on this pin after the falling edge of the serial clock. This pin is also an SIO1 pin when the device is in SDI or SQI mode. The SIO1 pin is used both as an input and an output pin during communication. During a read cycle, data are shifted out on this pin after the falling edge of the serial clock. During a write cycle, data are shifted in on this pin after the rising edge of the serial clock.

2.3 SIO2

This pin is used when the device is in SQI mode. The SIO2 pin is used both as an input and an output pin during communication. During a read cycle, data are shifted out on this pin after the falling edge of the serial clock. During a write cycle, data are shifted in on this pin after the rising edge of the serial clock.

2.4 VSS

This pin is a Ground Pin.

2.5 SI/SIO0

The SI pin is used to transfer data into the device. It receives instructions, addresses and data. Data are latched on the rising edge of the serial clock. This pin is also an SIO0 pin when the device is in SDI or SQI mode. The SIO0 pin is used both as an input and an output pin during communication. During a read cycle, data are shifted out on this pin after the falling edge of the serial clock. During a write cycle, data are shifted in on this pin after the rising edge of the serial clock.

2.6 Serial Clock (SCK)

The SCK is used to synchronize the communication between a host and the device. Instructions, addresses or data present on the SI pin are latched on the rising edge of the clock input, while data on the SO pin are updated after the falling edge of the clock input.

2.7 $\overline{Hold}$/SIO3

This pin is used as a $\overline{HOLD}$ pin when the device is used in SPI or SDI mode. This pin is also an SIO3 pin when the device is in SQI mode. The SIO3 pin is used both as an input and an output pin during communication. During a read cycle, data are shifted out on this pin after the falling edge of the serial clock. During a write cycle, data are shifted in on this pin after the rising edge of the serial clock.

2.8 VCC

This pin provides power to the device. The normal operating voltage range is from 1.7V to 3.6V for 23AA04M and 2.2V to 3.6V for 23LCV04M.

2.9 VBAT Supply Input

The VBAT pin is used as an input for external backup supply to maintain SRAM data when VCC is below the VTRIP point. If the VBAT function is not being used it is recommended to connect this pin to VSS.

© 2024 Microchip Technology Inc. and its subsidiaries

Downloaded from Arrow.com.

3.0 FUNCTIONAL DESCRIPTION

3.1 Principles of Operation

The Microchip Technology Inc. 23XX04M is a 4-Mbit Serial SRAM device. The memory is accessed via a Serial Peripheral Interface (SPI) compatible serial bus. The memory also supports SDI mode, a 2-bit I/O interface and a Serial Quad I/O™ (SQI™), 4-bit I/O interface that allows high-performance operation in a low pin-count package. The bus signals required are a clock input (SCK) plus separate data lines (SI/SIO0, SO/SIO1, SIO2, SIO3). Access to the device is controlled through a Chip Select (CS) input. Communication to the device in SPI and SDI mode can be paused via the hold pin ($\overline{\text{HOLD}}$). While the device is paused, transitions on its inputs will be ignored, allowing the host to service higher priority interrupts.

The 23LCV04M has a VBAT pin, which connects to an external backup battery and allows for non-volatile operation. Automatic switching to the backup battery occurs when VCC supply falls below VTRIP level without loss of data. In addition to the SRAM array, the settings in the STATUS register are also retained by the battery. When VCC voltage is restored, the battery is automatically disconnected, and normal operation is restored.

3.2 Device Operation

The 23XX04M supports Serial Peripheral Interface (SPI) bus protocol, a 2-bit multiplexed SDI bus mode and a 4-bit multiplexed SQI bus mode. The 23XX04M defaults to SPI mode after a power-on reset to provide backward compatibility.

An `EDIO` command instruction configures the device to SDI mode. The dataflow in the SDI mode is similar to the SPI mode, except it uses two multiplexed I/O signals for command, address, and data sequence. The device supports both mode 0 (0,0) and mode 3 (1,1) bus operations. The difference between the two modes is the state of the SCK signal when the bus host is in Standby mode and no data are being transferred.

The SCK signal is low for mode 0 and SCK signal is high for mode 3. For both modes, the Serial Data I/O (SIO[1:0]) is sampled at the rising edge of the SCK clock signal for input and driven after the falling edge of the SCK clock signal for output. The traditional SPI protocol uses separate input (SI) and output (SO) data signals, as shown in Figure 3-1. The SDI mode uses two multiplexed signals, SIO[1:0], for both data in and data out, as shown in Figure 3-2. This means the SDI mode doubles the traditional bus transfer speed at the same clock frequency, without the need for more pins on the package. A `RSTIO` command instruction resets the device to SPI mode.

An `EQIO` command instruction configures the device to SQI mode. The dataflow in the SQI mode is similar to the SPI mode, except it uses four multiplexed I/O signals for command, address, and data sequence. The device supports both mode 0 (0,0) and mode 3 (1,1) bus operations. The difference between the two modes is the state of the SCK signal when the bus host is in Standby mode and no data are being transferred.

The SCK signal is low for mode 0 and SCK signal is high for mode 3. For both modes, the Serial Data I/O (SIO[3:0]) is sampled at the rising edge of the SCK clock signal for input and driven after the falling edge of the SCK clock signal for output. The traditional SPI protocol uses separate input (SI) and output (SO) data signals, as shown in Figure 3-1. The SQI protocol uses four multiplexed signals, SIO[3:0], for both data in and data out, as shown in Figure 3-3. This means the SQI protocol quadruples the traditional bus transfer speed at the same clock frequency, without the need for more pins on the package. A `RSTIO` command instruction resets the device to SPI mode.

© 2024 Microchip Technology Inc. and its subsidiaries

Downloaded from Arrow.com.

FIGURE 3-1: SPI PROTOCOL

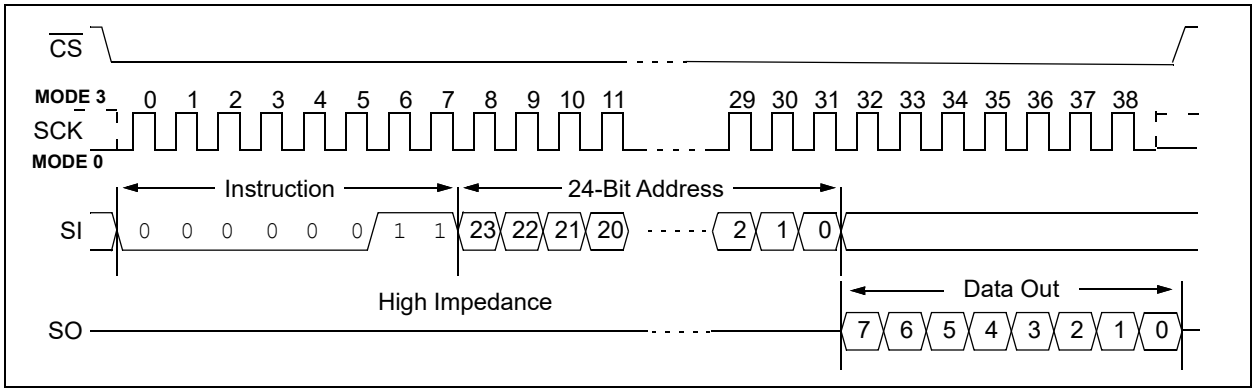

FIGURE 3-2: SDI PROTOCOL

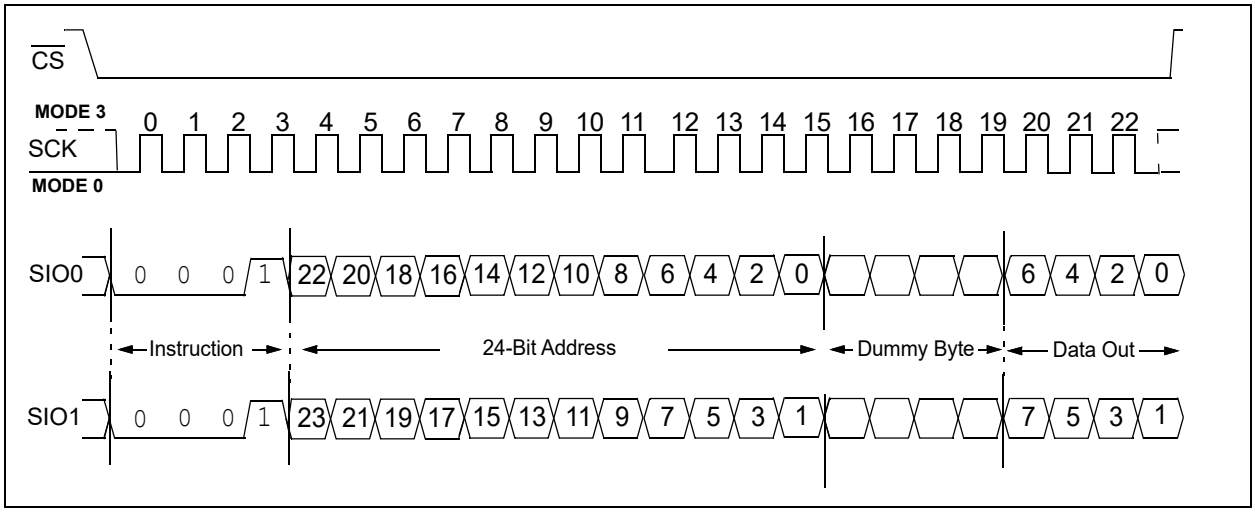

FIGURE 3-3: SQI PROTOCOL

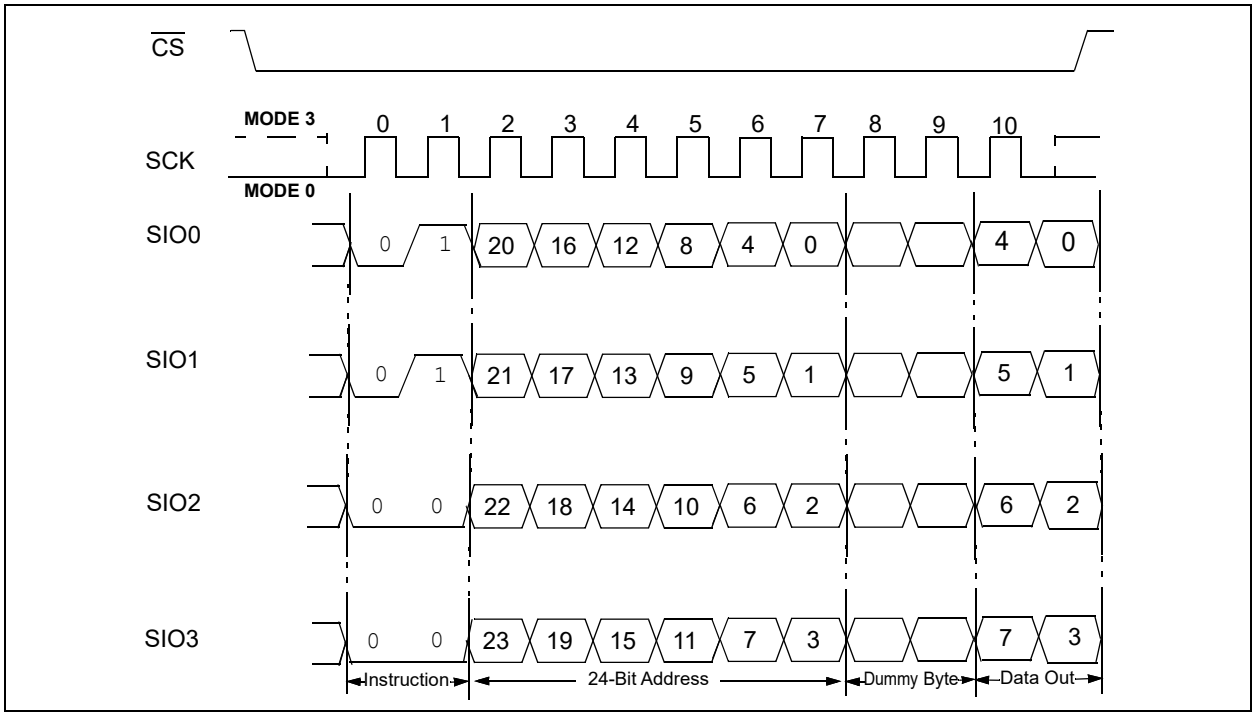

Downloaded from Arrow.com.

3.3 INSTRUCTIONS

Instructions are used to read, write and configure the 23XX04M. A complete list of the instructions is provided in Table 3-1. All instructions, addresses and data are transferred MSb first, LSb last.

TABLE 3-1: DEVICE OPERATION INSTRUCTIONS FOR 23AA04M

Instruction	Description	Command Byte(1)	Interface			Address Bytes(1, 2)	Dummy Bytes(1)	Data Bytes(1)	Max Frequency
			SPI	SDI	SQI				
READ	Read Memory	0x03	X			3	0	1 to ∞	40 MHz
				X			1		
					X		1		
High-Speed Read	Read Memory	0x0B	X			3	1	1 to ∞	143 MHz
				X			3		
					X		3		
WRITE	Write to Memory	0x02	X	X	X	3	0	1 to ∞	143 MHz
EDIO	Enter Dual I/O mode	0x3B	X			0	0	0	143 MHz
EQIO	Enter Quad I/O mode	0x38	X			0	0	0	143 MHz
RSTIO(3,4)	Reset Dual or Quad I/O mode	0xFF	X	X	X	0	0	0	143 MHz
RDSR	Read STATUS Register	0x05	X			0	0	1 to ∞	143 MHz
				X	X	0	1		
WRSR	Write to STATUS Register	0x01	X	X	X	0	0	2	143 MHz

Note 1: Command Bytes, Address Bytes, Dummy Bytes and Data Bytes are two clock periods in SQI mode, four clock periods in SDI mode and eight clock periods in SPI mode.
2: Address bits above the most significant bit of each density are ignored and can be V_{IL} or V_{IH}.
3: Device accepts eight-clock command in SPI mode, four-clock command in SDI mode and two-clock command in SQI mode.
4: Device accepts RSTIO command with eight clocks with all SIO pins high regardless of current communication mode.

© 2024 Microchip Technology Inc. and its subsidiaries

Downloaded from Arrow.com.

3.4 HOLD OPERATION

The HOLD/SIO3 pin functions as either a hold pin or an I/O pin. The HOLD/SIO3 pin functions as a HOLD pin only when the device is in SPI mode or SDI mode. The HOLD pin is used to pause serial sequences underway with the memory without resetting the clocking sequence.

To activate Hold mode, CS must be in active-low state. Hold mode begins when the SCK active-low state coincides with the falling edge of the HOLD signal. Hold mode ends when the HOLD signal's rising edge coincides with the SCK active-low state.

If the falling edge of the HOLD signal does not coincide with the SCK active-low state, then the device enters Hold mode when the SCK next reaches the active-low state. Similarly, if the rising edge of the HOLD signal does not coincide with the SCK active-low state, then the device exits Hold mode when the SCK next reaches the active-low state. See Figure 3-4 for Hold Condition waveform.

The SO line will tri-state immediately upon a high-to-low transition of the HOLD pin, and will begin outputting again Immediately upon a subsequent low-to-high transition of the HOLD pin, independent of the state of SCK.

If CS is driven active-high during a Hold condition, it resets the internal logic of the device. As long as the HOLD signal is low, the memory remains in the Hold condition. To resume communication with the device, HOLD must be driven active-high, and CS must be driven active-low. See Figure 3-4 for Hold timing.

FIGURE 3-4: HOLD CONDITION WAVEFORM

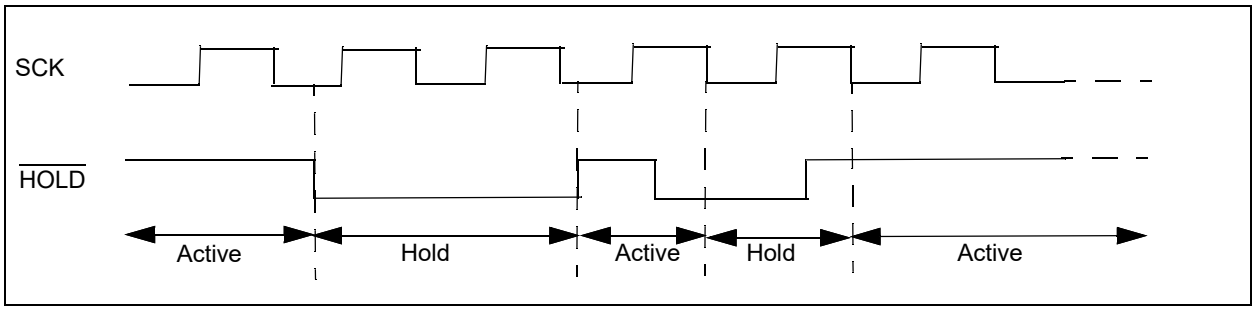

Downloaded from Arrow.com.

3.5 STATUS REGISTER

The STATUS register shown in Table 3-2 provides Status bits to indicate if an Error Correction Code (ECC) scheme was used during the previously executed read command and provides mode bits to configure the page size. It also allows the user to configure the output driver to improve signal integrity.

TABLE 3-2: STATUS REGISTER

Bit	Name	Function	Default at Power-up	Read/Write (R/W)
15,14	MODE	00 = Byte operation 10 = Page operation 01 = Sequential operation	01	R/W
13	ECS	Error Correction State Latch bit 1 = The previously executed read command did require the Error Correction Code (ECC) scheme 0 = The previous executed read command did not require the Error Correction Code (ECC) scheme	0	R
12,11	PROT	Indicates current bus protocol 00 = SPI 01 = SDI 10 = SQI	00	R
10,9	RES	Reserved for future use	00	R
8	PAGE SIZE	Sets number of bytes per page 0 = 32 Bytes per Page 1 = 256 Bytes per Page	0	R/W
7,6,5	RES	Reserved for future use	000	R
4,3	SR	Output Slew Rate 00 = 1.44 V/ns 01 = 2.88 V/ns 10 = 4.33 V/ns 11 = 6.00 V/ns	10	R/W
2,1,0	DRV	Output Drive Strength 000 = 12.5% 001 = 25% 010 = 35% 011 = 42.5% 100 = 50% 101 = 60% 110 = 75% 111 = 100%	100	R/W

3.5.1 OUTPUT DRIVE STRENGTH

The DRV bits configure the output drive strength.

3.5.2 OUTPUT SLEW RATE

The SR bits configure the output slew rate.

3.5.3 PAGE SIZE

The Page Size bit configures the page size to be either 32 bytes per page or 256 bytes per page.

3.5.4 PROT

The PROT bits indicate whether the device is currently using SPI, SDI or SQI bus protocol.

3.5.5 ERROR CORRECTION STATE LATCH

The Error Correction State (ECS) bit indicates whether the on-chip Error Correction Code (ECC) logic scheme was invoked during the previous read operation. For more information related to ECC, refer to **Section 3.15 "ERROR CORRECTION CODE (ECC)"**. The ECS bit will be set to logic '0' unless the previously executed read operation required the use of the ECC logic scheme. When this occurs the ECS bit will set to logic '1'.

© 2024 Microchip Technology Inc. and its subsidiaries

Downloaded from Arrow.com.

The ECS bit will continue to read a logic '1' until another read operation occurs where the use of the ECC logic scheme is not required or a Power-on Reset (PoR) event occurs.

3.5.6 MODE BITS

The mode bits indicate the mode of the read/write operation. The three modes of operation supported are Byte operation, Page operation and Sequential operation.

Byte Operation – is selected when bits 15 and 14 in the STATUS register are set to '00'. In this mode, the read/write operations are limited to only one byte. The command, followed by the 24-bit address, is clocked into the device and the data to/from the device is transferred on the next eight clocks (e.g. Figure 3-5, Figure 3-19).

Page Operation – is selected when bits 15 and 14 in the STATUS register are set to '10'. Page size is determined by bit 8 in the STATUS register. Page size is 32 bytes when bit 8 in the STATUS register is equal to '0' and 256 bytes when bit 8 in the STATUS register is equal to '1'. The 23XX04M has 16,384 pages of 32 bytes/2,048 pages of 256 bytes. In this mode, the read and write operations are limited to within the addressed page (the address is automatically incremented internally). If the data being read or written reach the page boundary, then the internal address counter will increment to the start of the page (e.g. Figure 3-6, Figure 3-20).

Sequential Operation – is selected when bits 15 and 14 in the STATUS register are set to '01'. Sequential operation allows the entire array to be written to and read from. The internal address counter is automatically incremented, and page boundaries are ignored. When the internal address counter reaches the end of the array, the address counter will roll over to 0x00000 (e.g. Figure 3-7, Figure 3-21).

© 2024 Microchip Technology Inc. and its subsidiaries

Downloaded from Arrow.com.

3.6 READ INSTRUCTION

The Read instruction is supported in SPI mode, SDI mode and SQI mode with clock frequency up to 40 MHz. The device is selected by pulling $\overline{CS}$ low. The 8-bit `READ` (0x03) instruction is transmitted to the device, followed by the 24-bit address, and then by dummy cycles, if required (see Table 3-1). After the `READ` instruction, address and dummy are sent, the data stored in the memory at the selected address are shifted out on the output pins. The number of bytes read will depend on the mode of operation of the device (i.e., byte operation, page operation or sequential operation).

If operating in Byte mode, one data byte at the specified address is read out as shown in Figure 3-5 and Figure 3-8. If the host continues clocking the device, the same data byte will continue to be read out.

If operating in Page mode, the data stored within the page is read out starting with the specified address. Page size is either 32 bytes per page or 256 bytes per page based on the Page Size bit selection in the STATUS register. If the data being read reach the page boundary, then the internal address counter will increment to the start of the page, as shown in Figure 3-6 and Figure 3-9.

If operating in Sequential mode, the data stored in the memory at the next address can be read sequentially by continuing to provide clock pulses. The internal Address Pointer is automatically incremented to the next highest address after each byte of data is shifted out, as shown in Figure 3-7. When address 3FFFFh is reached, the address counter rolls over to address 00000h, allowing the read cycle to continue indefinitely. The read operation is terminated by raising the $\overline{CS}$ pin. When the highest address, 7FFFFh, is reached, the address counter rolls over to address 40000h, allowing the read cycle to be continued indefinitely.

The device will reject read instructions that have an insufficient number of clocks in command byte/address byte.

FIGURE 3-5: BYTE READ (SPI MODE)

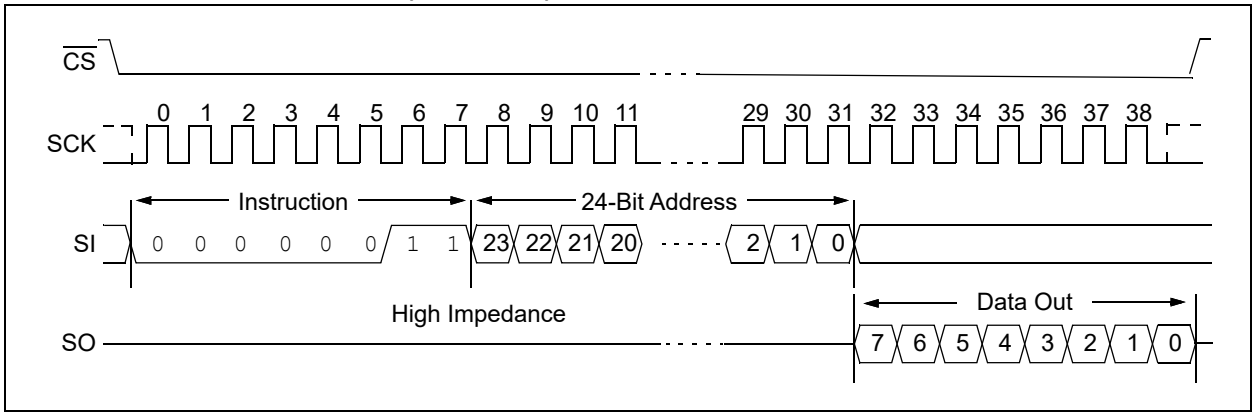

© 2024 Microchip Technology Inc. and its subsidiaries

Downloaded from Arrow.com.

FIGURE 3-6: PAGE READ (SPI MODE)

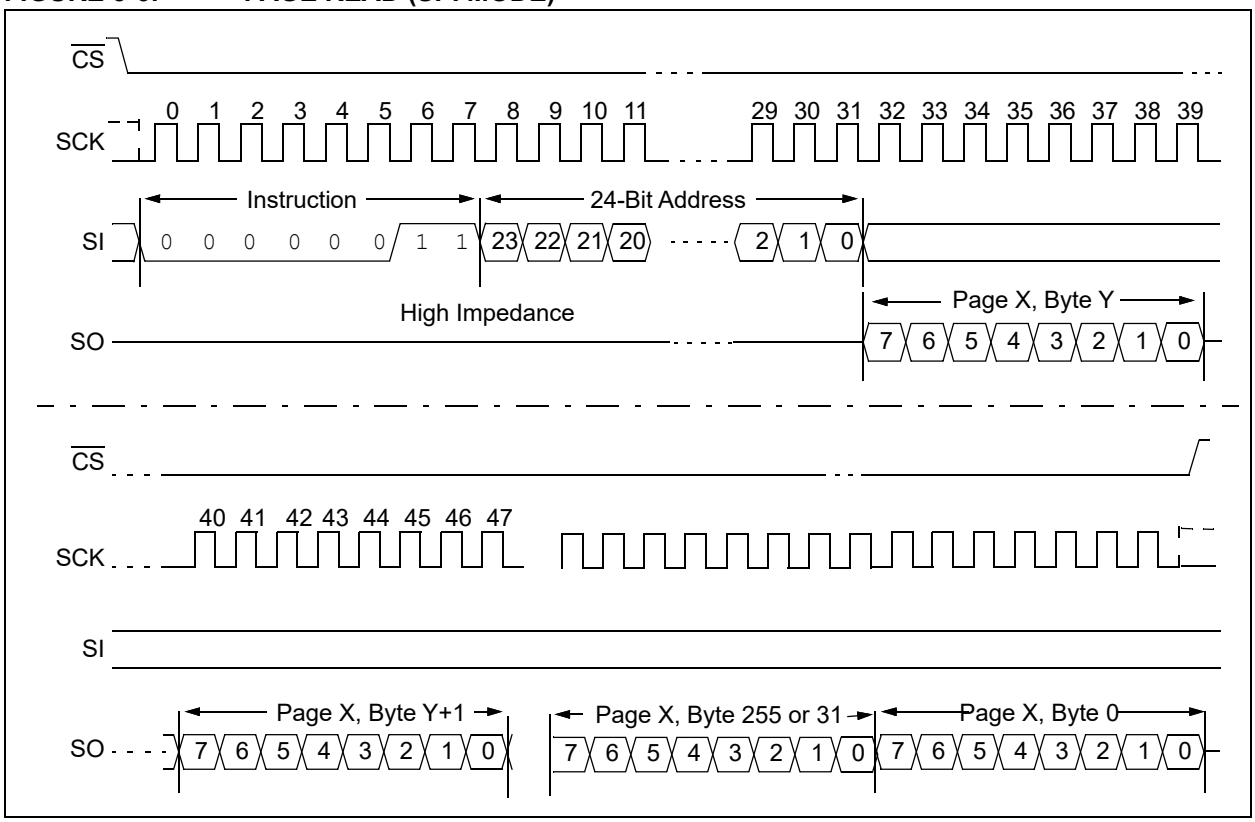

FIGURE 3-7: SEQUENTIAL READ (SPI MODE)

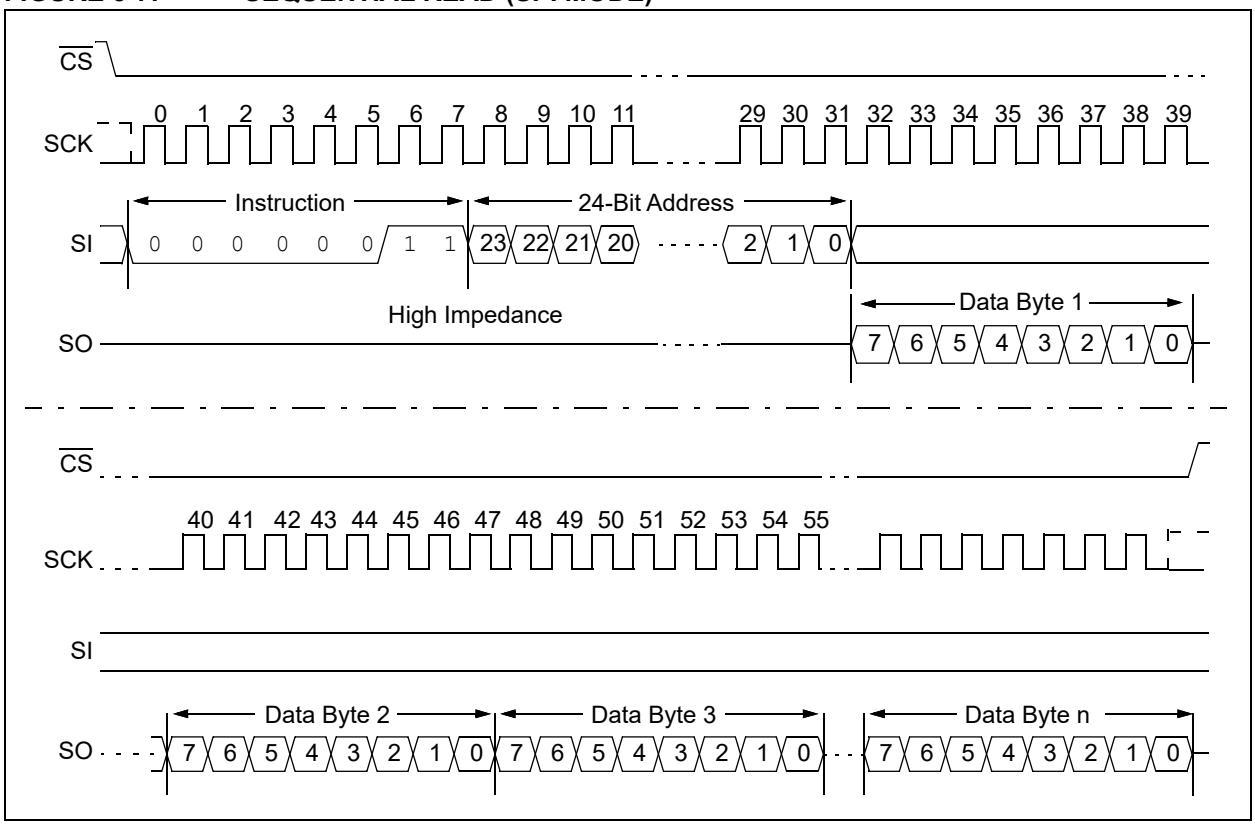

Downloaded from Arrow.com.

FIGURE 3-8: BYTE READ (SDI MODE)

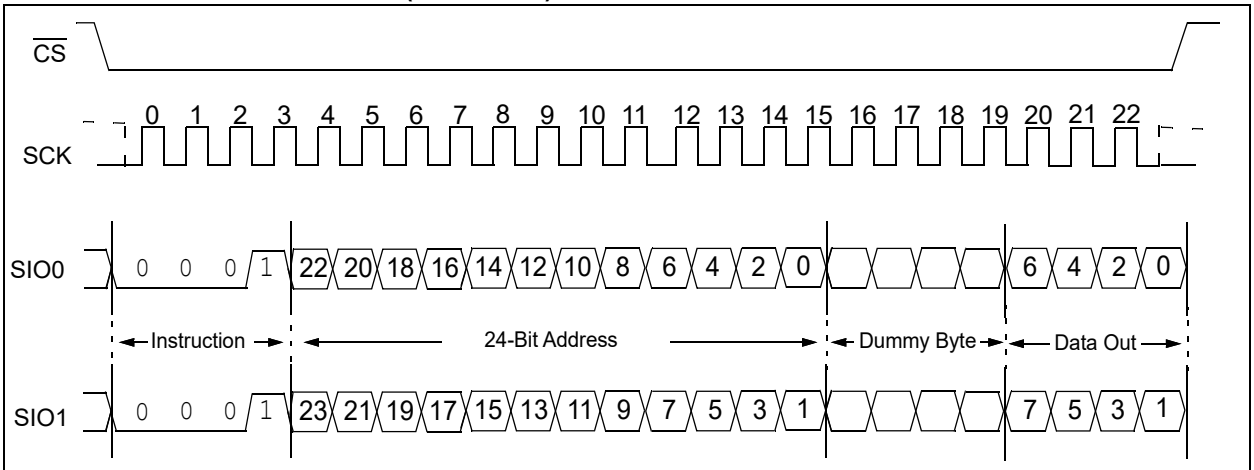

Note 1: Page and sequential mode are similar in that additional bytes can be clocked out before the $\overline{CS}$ is brought high.

2: The first byte read after the address will be a dummy byte.

FIGURE 3-9: BYTE READ (SQI MODE)

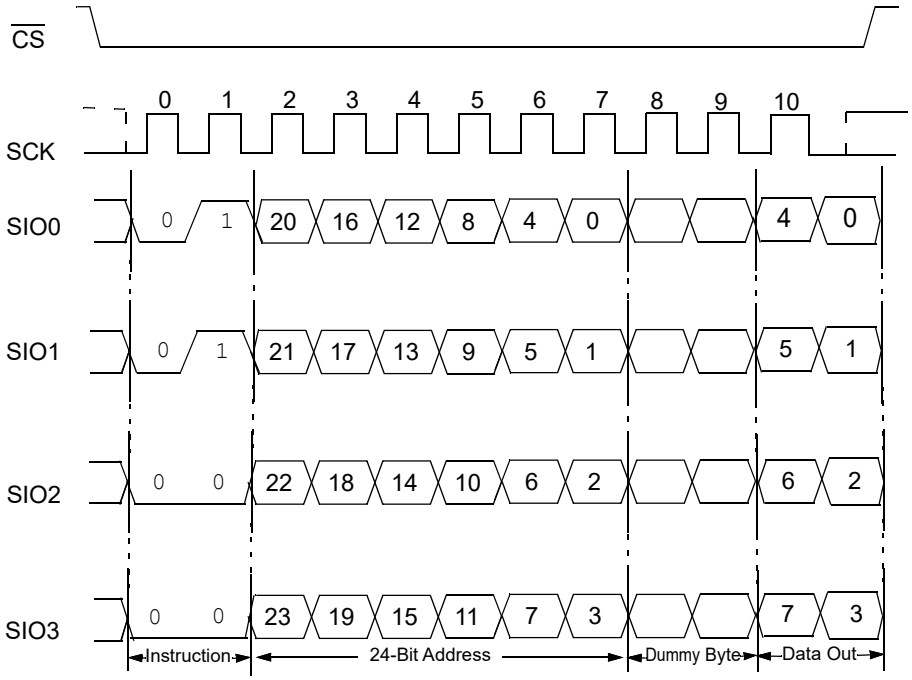

Note 1: Page and sequential mode are similar in that additional bytes can be clocked out before the $\overline{CS}$ is brought high.

2: The first byte read after the address will be a dummy byte.

© 2024 Microchip Technology Inc. and its subsidiaries

Downloaded from Arrow.com.

3.7 HIGH-SPEED READ INSTRUCTION

The High-Speed Read instruction is supported in SPI mode, SDI mode and SQI mode with clock frequency up to 143 Mhz. The device is selected by pulling $\overline{CS}$ low. The 8-bit High Speed Read (0x0B) instruction is transmitted to the device, followed by the 24-bit address and then by dummy cycles (see Table 3-1). After the High-Speed Read instruction, address and dummy are sent, the data stored in the memory at the selected address are shifted out on the output pins. The number of bytes read will depend on the mode of operation of the device (i.e., byte operation, page operation or sequential operation).

If operating in Byte mode, one data byte at the specified address is read out as shown in Figure 3-10, Figure 3-13 and Figure 3-16.

If operating in Page mode, the data stored within the page is read out starting with the specified address. Page size is either 32 bytes per page or 256 bytes per page based on the Page Size bit selection in the STATUS register. If the data being read reach the page boundary, then the internal address counter will increment to the start of the page, as shown in Figure 3-11, Figure 3-14 and Figure 3-17.

If operating in Sequential mode, the data stored in the memory at the next address can be read sequentially by continuing to provide clock pulses. The internal Address Pointer is automatically incremented to the next highest address after each byte of data is shifted out, as shown in Figure 3-12, Figure 3-15 and Figure 3-18. When address 3FFFFh is reached, the address counter rolls over to address 00000h, allowing the read cycle to continue indefinitely. The read operation is terminated by raising the $\overline{CS}$ pin. When the highest address, 7FFFFh, is reached, the address counter rolls over to address 40000h, allowing the read cycle to continue indefinitely.

The device will reject High-Speed Read instructions that have an insufficient number of clocks in the command byte/address byte/dummy byte.

FIGURE 3-10: HIGH SPEED BYTE READ (SPI MODE)

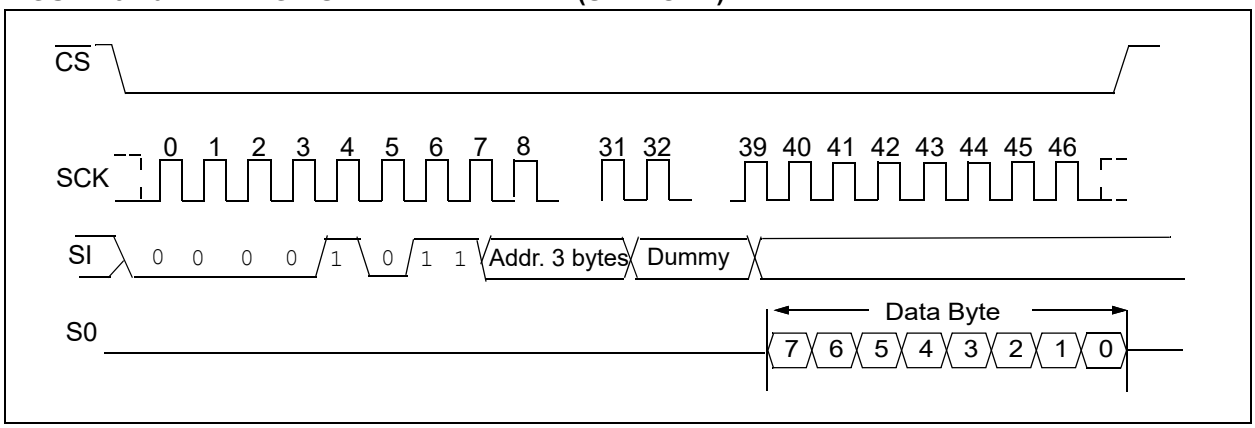

Downloaded from Arrow.com.

FIGURE 3-11: HIGH SPEED PAGE READ (SPI MODE)

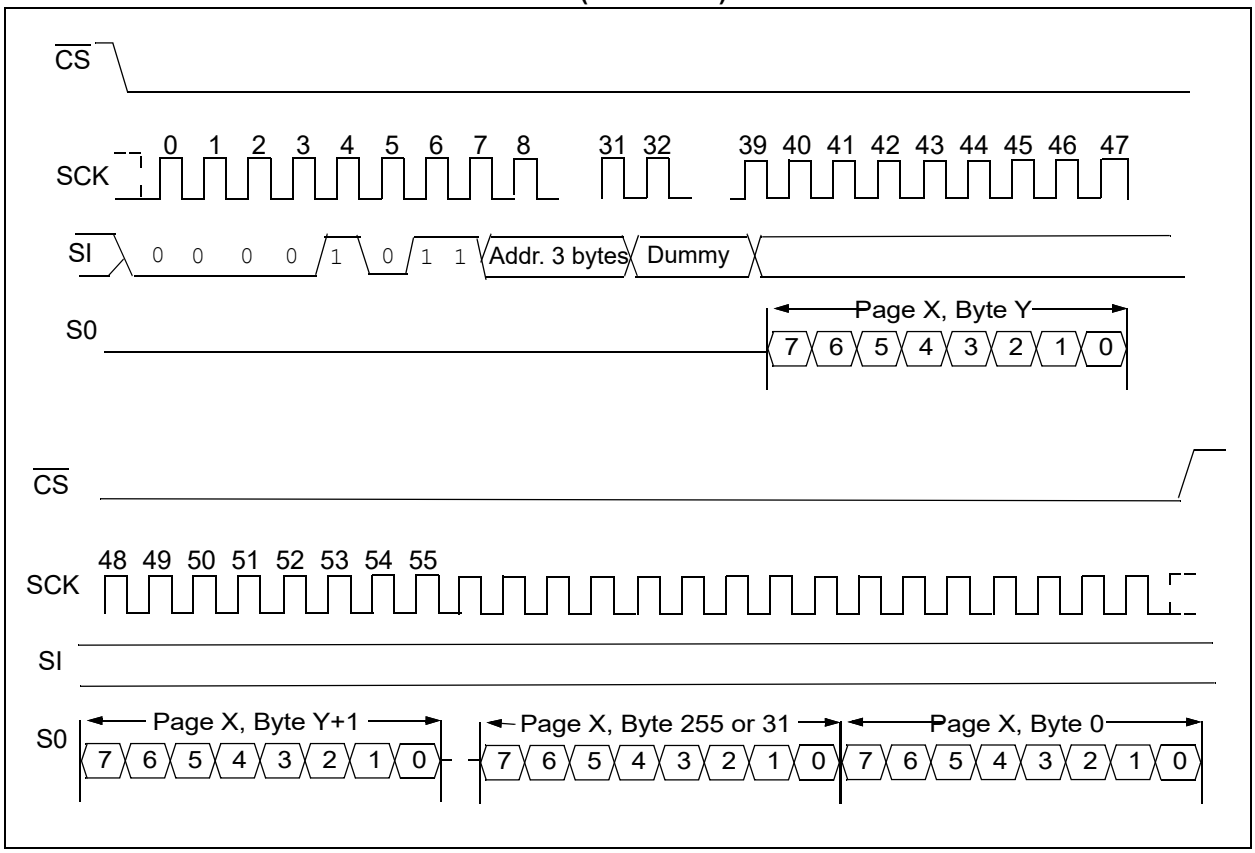

© 2024 Microchip Technology Inc. and its subsidiaries

Downloaded from Arrow.com.

FIGURE 3-12: HIGH SPEED SEQUENTIAL READ (SPI MODE)

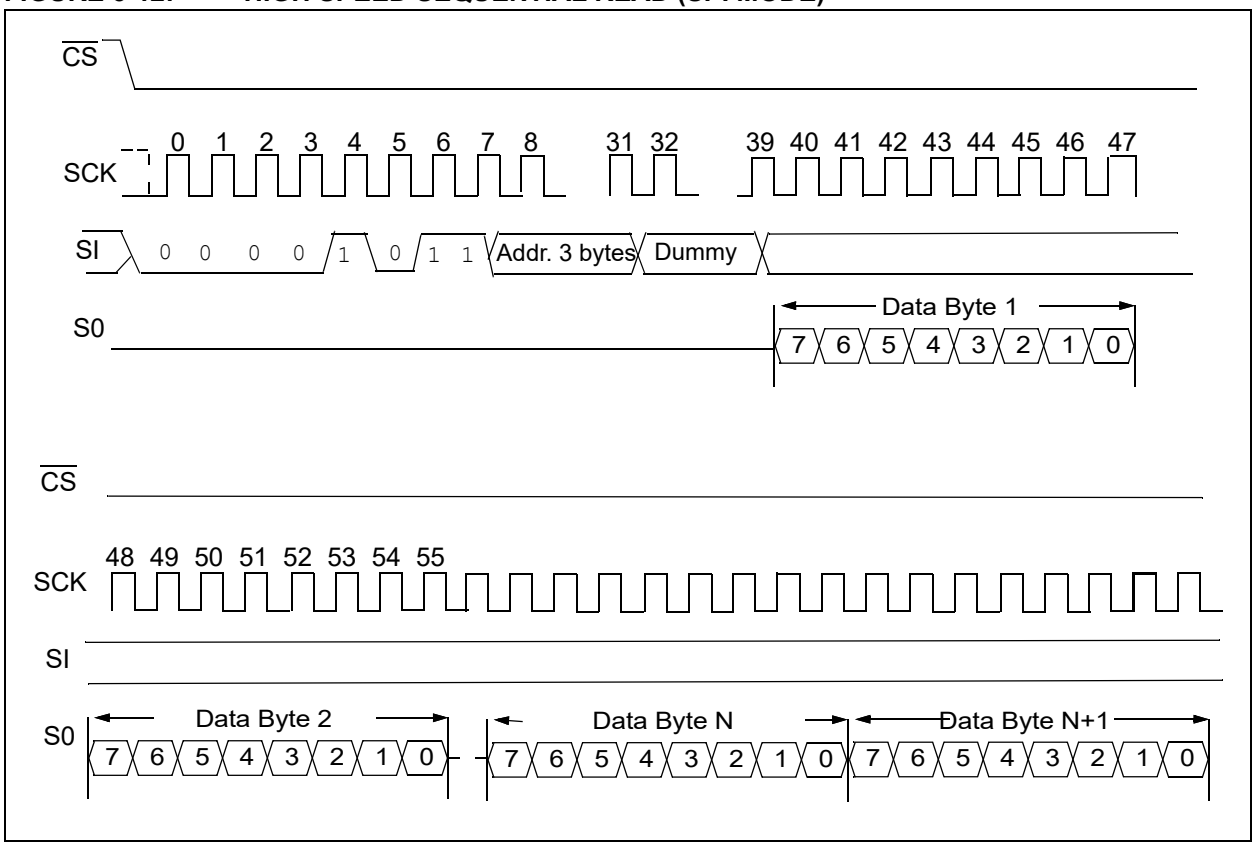

FIGURE 3-13: HIGH SPEED BYTE READ (SDI MODE)

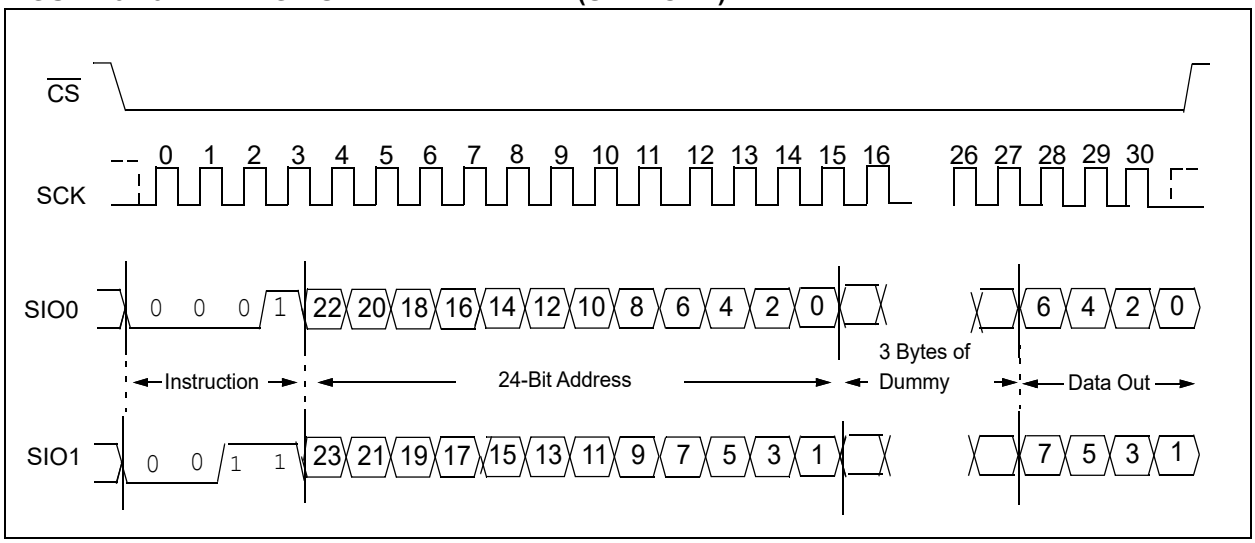

Downloaded from Arrow.com.

FIGURE 3-14: HIGH SPEED PAGE READ (SDI MODE)

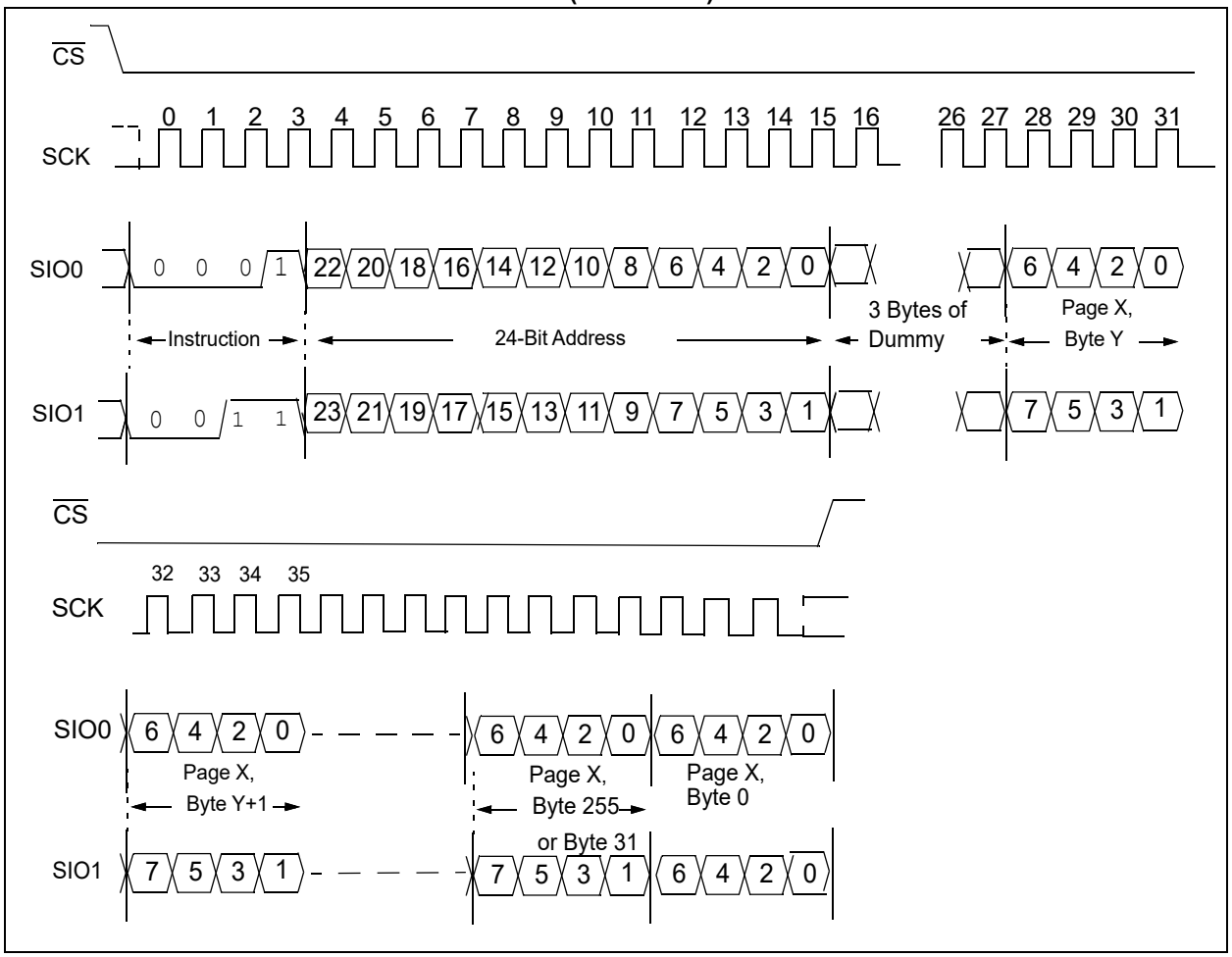

© 2024 Microchip Technology Inc. and its subsidiaries

Downloaded from Arrow.com.

FIGURE 3-15: HIGH SPEED SEQUENTIAL READ (SDI MODE)

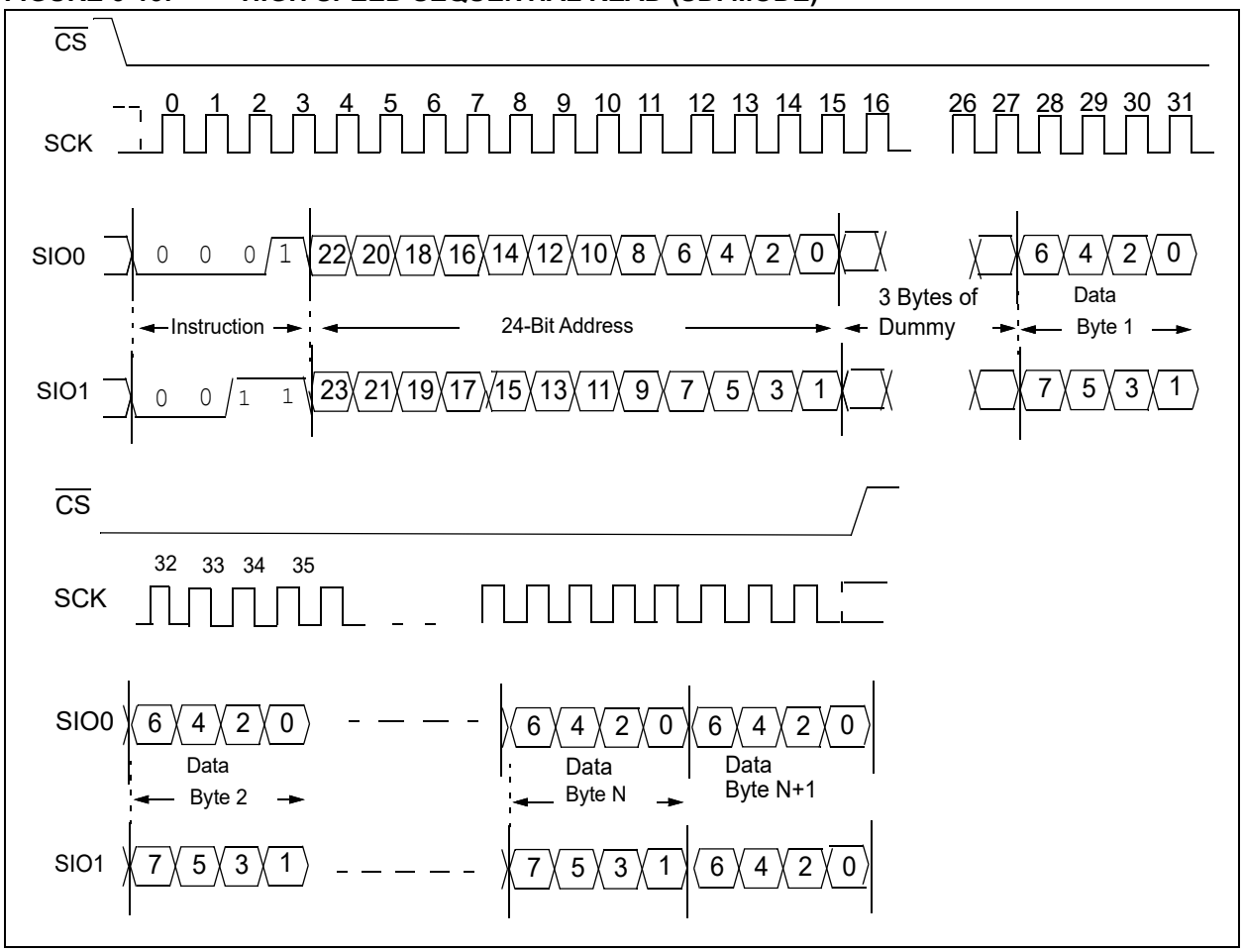

Downloaded from Arrow.com.

FIGURE 3-16: HIGH SPEED BYTE READ (SQI MODE)

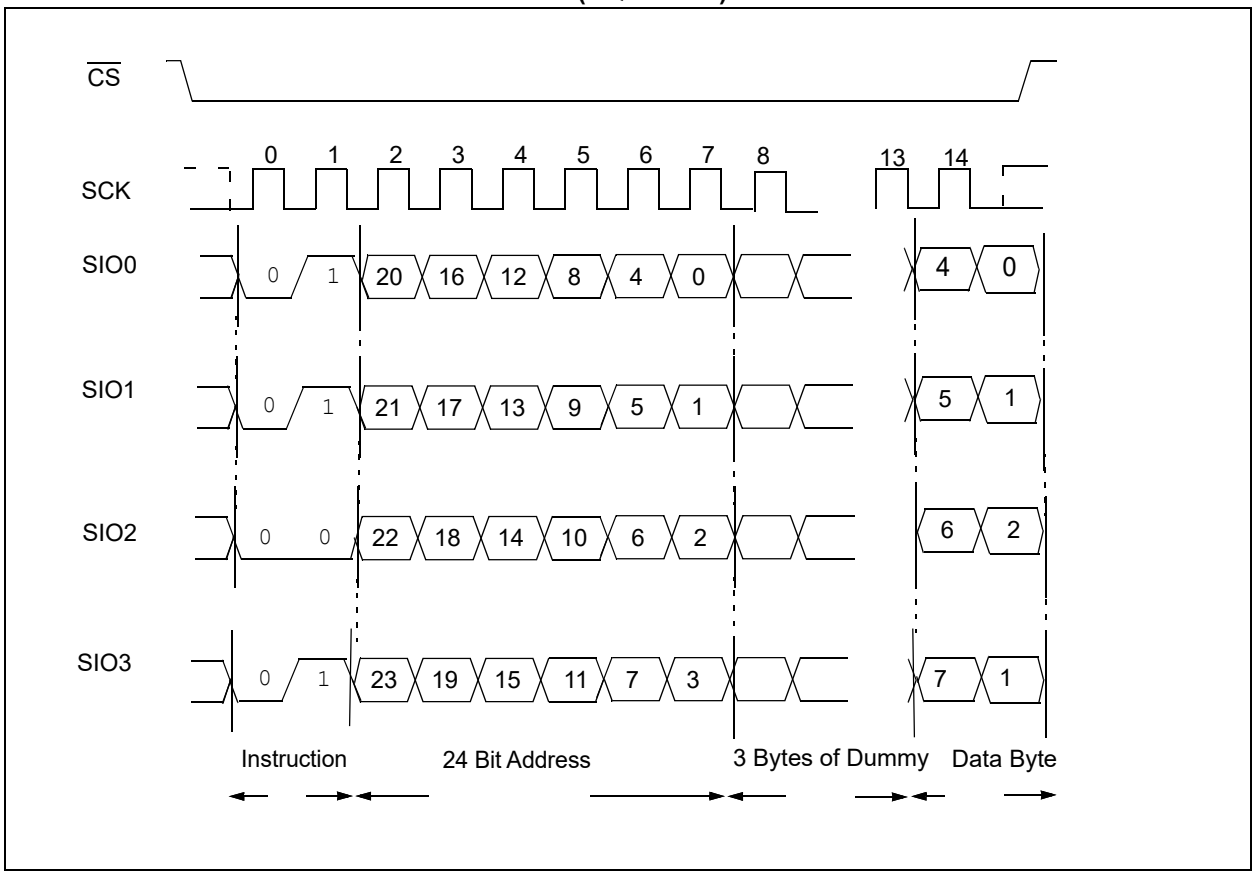

© 2024 Microchip Technology Inc. and its subsidiaries

Downloaded from Arrow.com.

FIGURE 3-17: HIGH SPEED PAGE READ (SQI MODE)

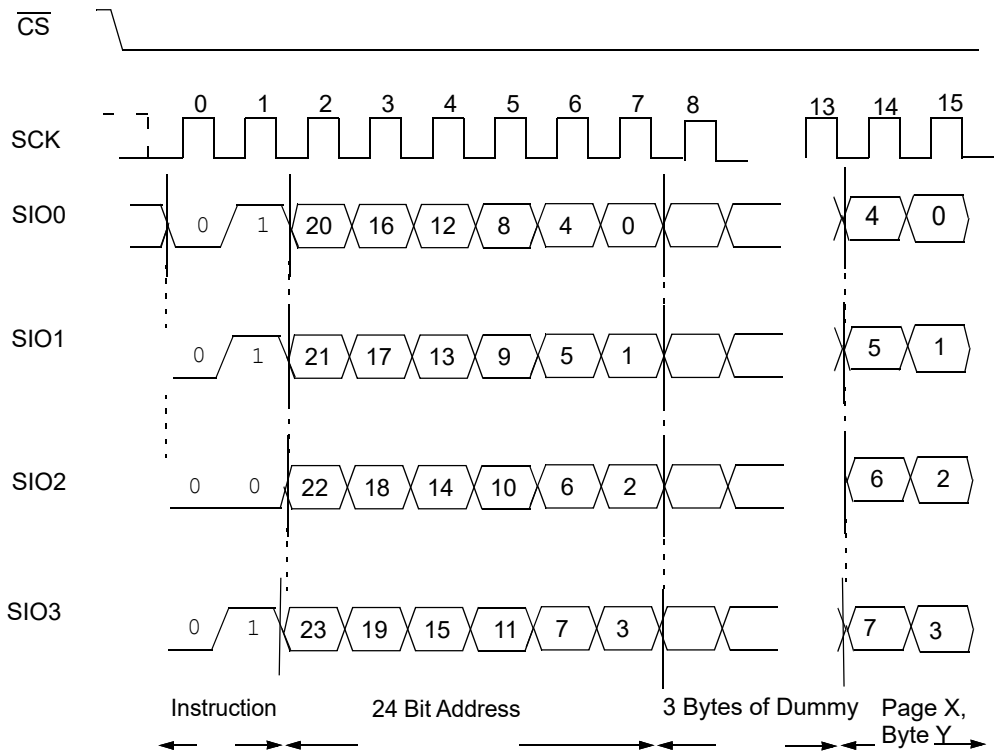

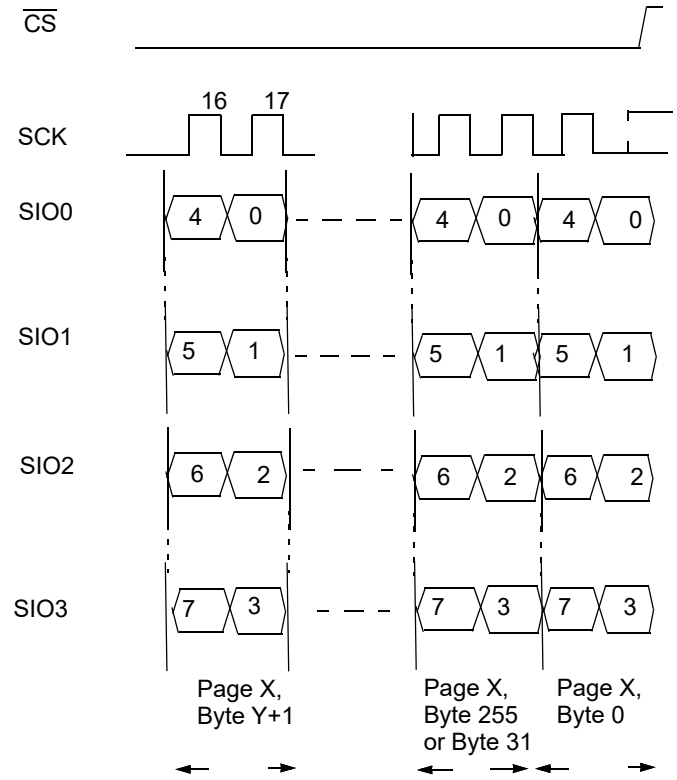

Downloaded from Arrow.com.

FIGURE 3-18: HIGH SPEED SEQUENTIAL READ (SQI MODE)

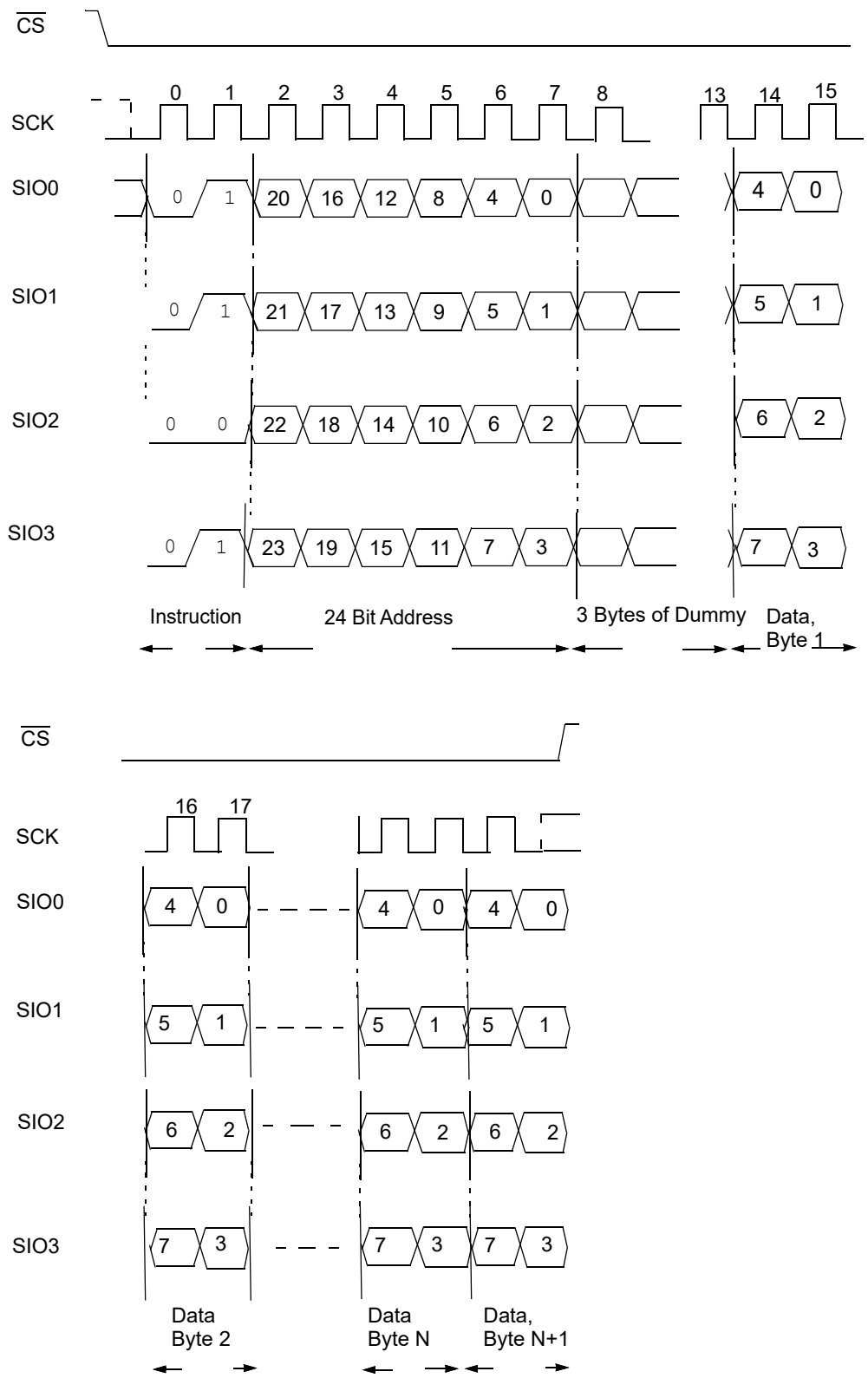

© 2024 Microchip Technology Inc. and its subsidiaries

Downloaded from Arrow.com.

3.8 WRITE INSTRUCTION

The Write instruction is supported in SPI mode, SDI mode and SQI mode with clock frequency up to 143 Mhz. The device is selected by pulling $\overline{CS}$ low. The 8-bit Write (0x02) instruction is transmitted to the device, followed by the 24-bit address, and then by data bytes to write to the device. The number of bytes to write will depend on the mode of operation of the device (i.e., byte operation, page operation or sequential operation).

If operating in Page mode, after the initial data byte is shifted in, additional bytes can be shifted into the device. The Address Pointer is automatically incremented. This operation can continue for the entire page (32 bytes or 256 bytes) before data will start to be overwritten, as shown in Figure 3-20. If operating in Sequential mode, after the initial data byte is shifted in, additional bytes can be clocked into the device, as shown in Figure 3-21. The internal Address Pointer is automatically incremented. When the Address Pointer reaches the highest address, the address counter rolls over to (00000h). This allows the operation to continue indefinitely; however, previous data will be overwritten.

The device will reject a Write instruction that has an insufficient number of clocks in the command byte/ address byte/first data byte. The device will accept Write instruction with a partial data byte by ignoring the partial data byte and writing all the complete data bytes that it receives.

FIGURE 3-19: BYTE WRITE (SPI MODE)

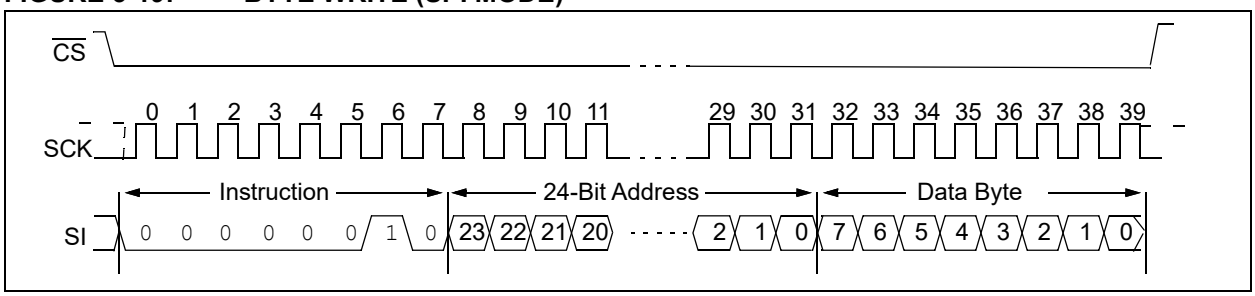

Downloaded from Arrow.com.

FIGURE 3-20: PAGE WRITE (SPI MODE)

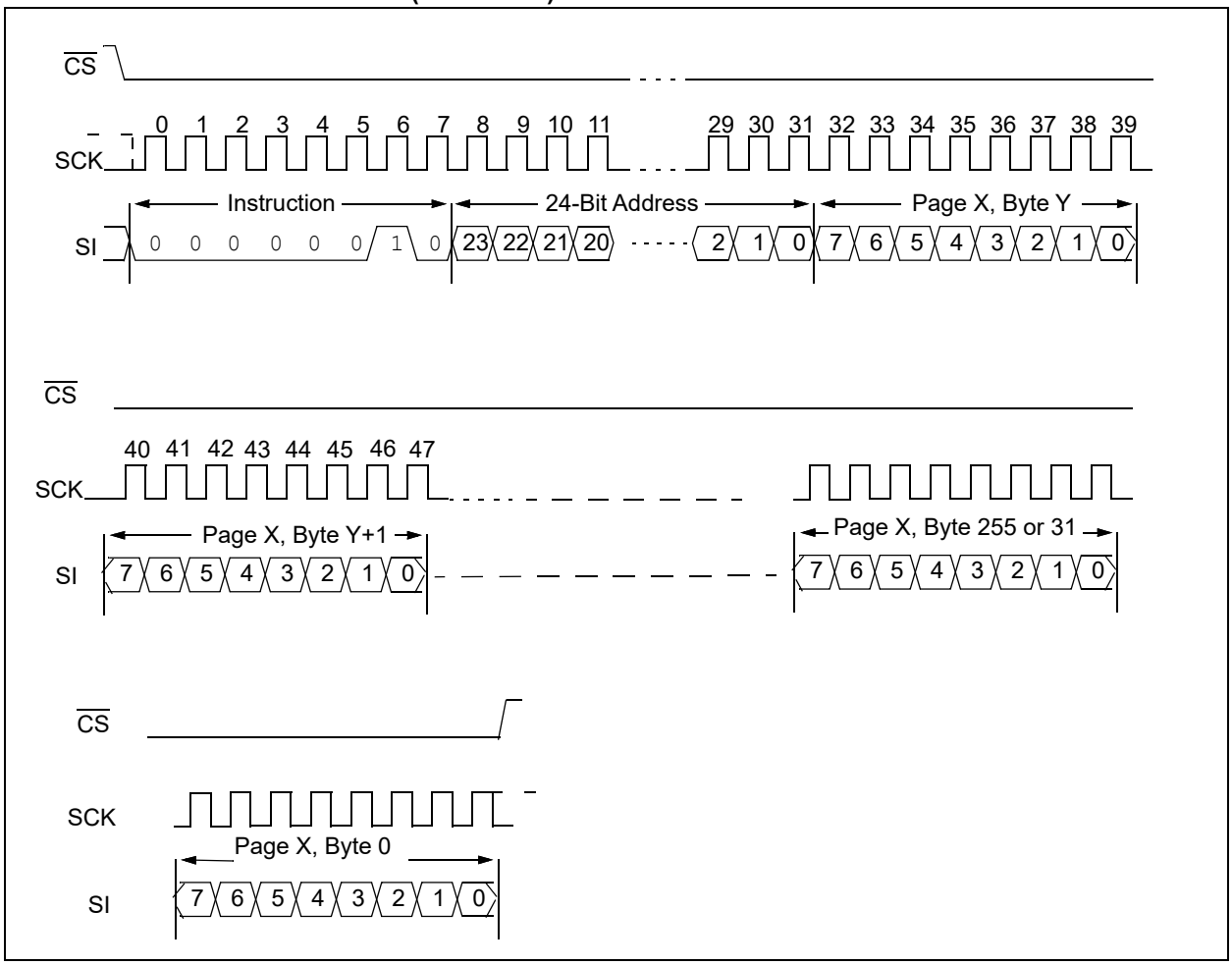

FIGURE 3-21: SEQUENTIAL WRITE (SPI MODE)

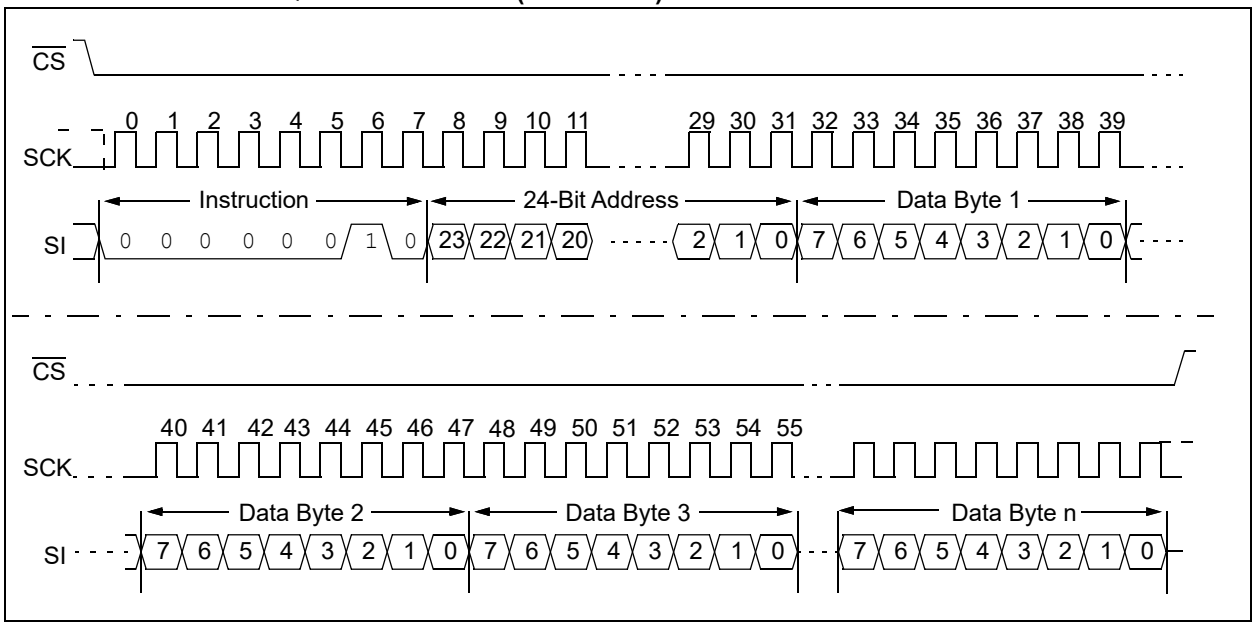

© 2024 Microchip Technology Inc. and its subsidiaries

Downloaded from Arrow.com.

FIGURE 3-22: BYTE WRITE (SDI MODE)

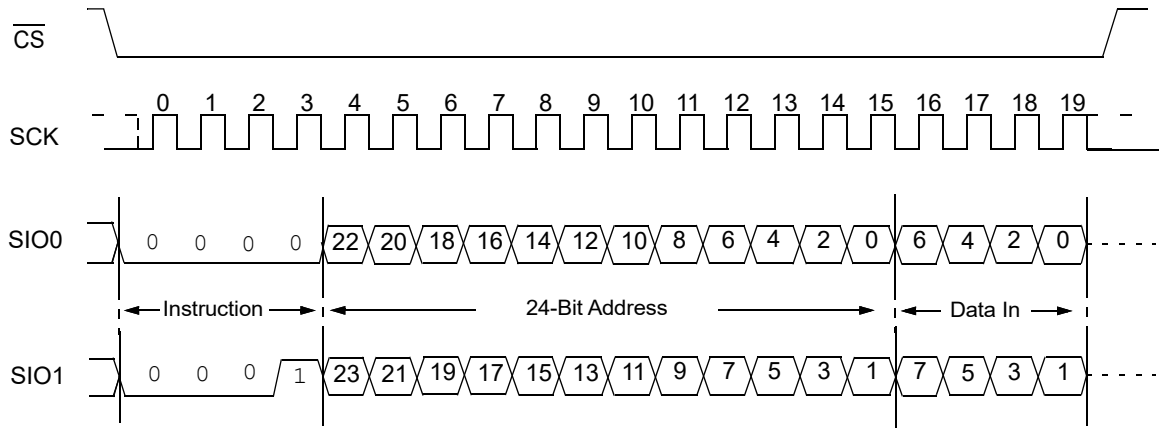

Note 1: Page and sequential mode are similar in that additional bytes can be clocked in before the $\overline{CS}$ is brought high.

FIGURE 3-23: BYTE WRITE (SQI MODE)

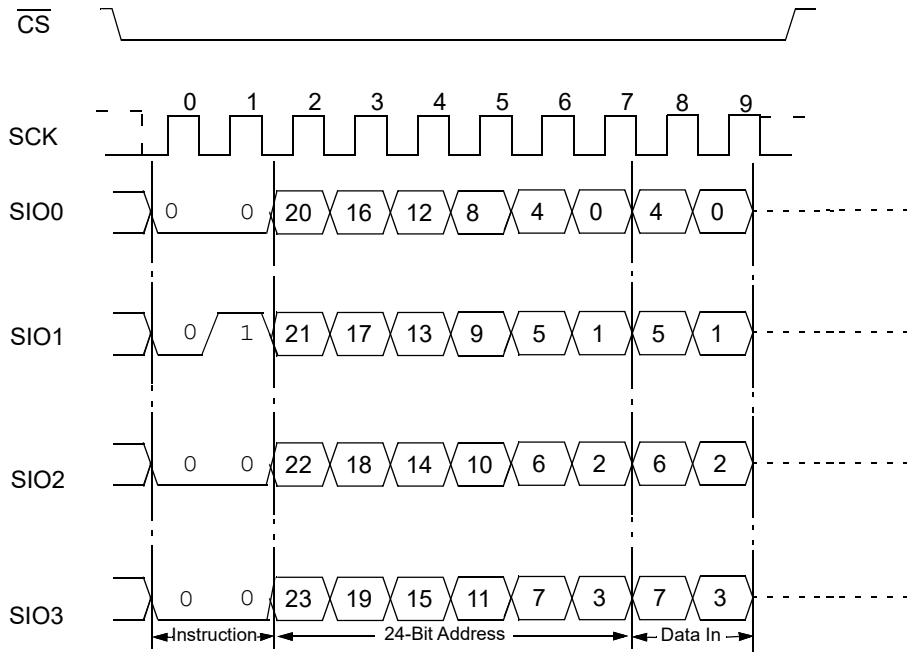

Note 1: Page and sequential mode are similar in that additional bytes can be clocked out before the $\overline{CS}$ is brought high.

Downloaded from Arrow.com.

3.9 ENABLE DUAL I/O INSTRUCTION

The Enable DUAL I/O (EDIO) instruction, 3BH, enables the device for SDI bus operation and the PROT bits <12:11> in the STATUS register will be set to '01'. Upon completion of the instruction, all instructions thereafter are expected to be 2-bit multiplexed input/output (SDI mode) until a power cycle or a "Reset I/O instruction" is executed. See Figure 3-24.

The device will reject an EDIO instruction that has an insufficient number of clocks in the command byte. The device will accept an EDIO instruction with extra clocks, in which case the extra clocks are ignored.

FIGURE 3-24: ENABLE DUAL I/O

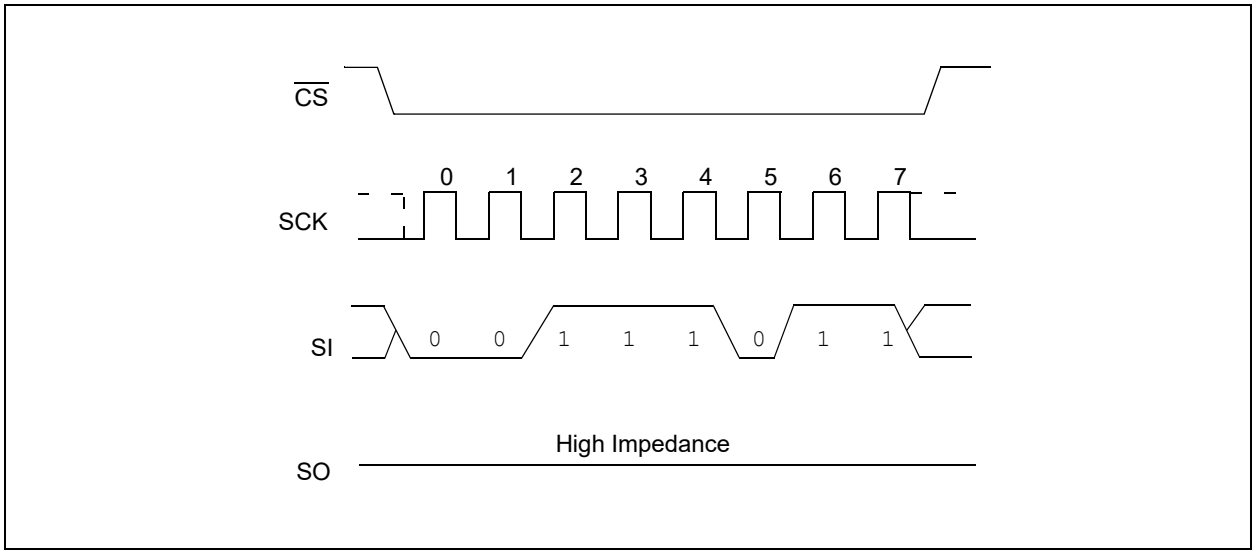

© 2024 Microchip Technology Inc. and its subsidiaries

Downloaded from Arrow.com.

3.10 ENABLE QUAD I/O INSTRUCTION

The Enable Quad I/O (`EQIO`) instruction, 38H, enables the device for SQI bus operation, and the PROT bits <12:11> in the STATUS register will be set to '`10`'. Upon completion of the instruction, all instructions thereafter are expected to be 4-bit multiplexed input/output (SQI mode) until a power cycle or a "Reset I/O instruction" is executed. See Figure 3-25.

The device will reject `EQIO` instructions with an insufficient number of clocks in the command byte. The device will accept `EQIO` instruction with extra clocks, in which case the extra clocks are ignored.

FIGURE 3-25: ENABLE QUAD I/O

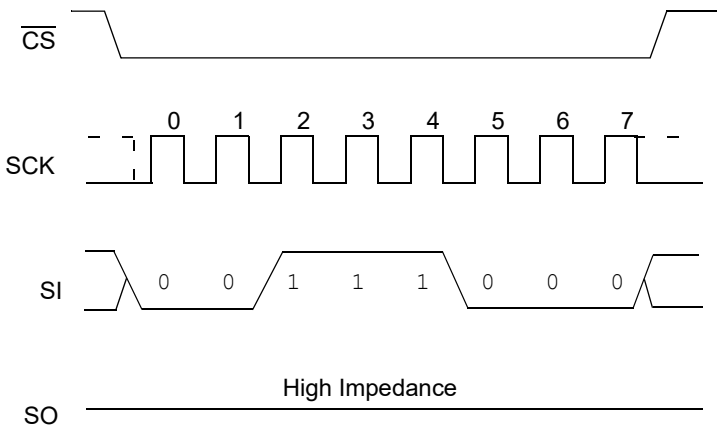

Downloaded from Arrow.com.

3.11 RSTIO INSTRUCTION

The Reset IO (RSTIO) instruction, FFH, resets the device for SPI bus operation, and the PROT bits <12:11> in the STATUS register will be cleared to 00. Upon completion of the instruction, all instructions thereafter are expected to be in SPI mode. The RSTIO command must be entered in the current device communication mode. See Figure 3-26 to reset from SDI mode and Figure 3-27 to reset from SQI mode.

The device will accept a RSTIO command with eight clocks with all SIO pins high, regardless of current communication mode.

The device will reject a RSTIO instruction that has an insufficient number of clocks in the command byte. The device will accept a RSTIO instruction with extra clocks, in which case the extra clocks are ignored.

FIGURE 3-26: RESET I/O (SDI MODE)

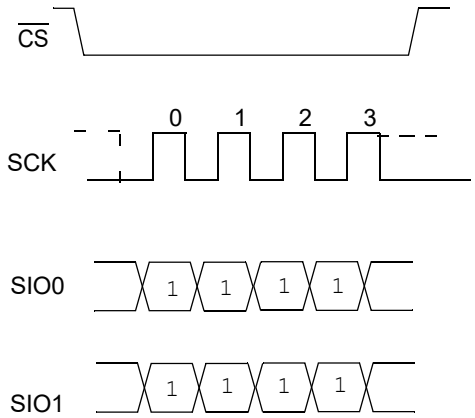

FIGURE 3-27: RESET I/O (SQI MODE)

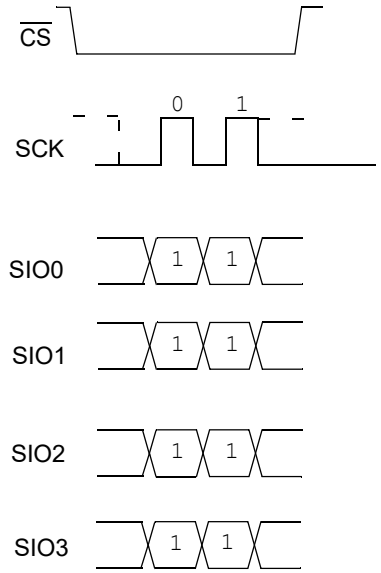

© 2024 Microchip Technology Inc. and its subsidiaries

Downloaded from Arrow.com.

3.12 READ STATUS REGISTER INSTRUCTION

The Read STATUS Register instruction (RDSR) (Figure 3-28) provides access to the STATUS register (Table 3-2). The STATUS register may be read at any time. This instruction is supported in SPI mode, SDI mode and SQI mode. In SPI mode, the Read STATUS Register instruction is issued, followed by a read out of the STATUS register. In SDI and SQI mode, the Read STATUS Register instruction is issued, followed by one dummy cycle and then by a read out of the STATUS register. The STATUS register output stream continues until terminated by a low-to-high transition of the CS pin.

The device will reject a RDSR instruction with insufficient number of clocks in the command byte.

FIGURE 3-28: READ STATUS REGISTER (RDSR) - SPI MODE

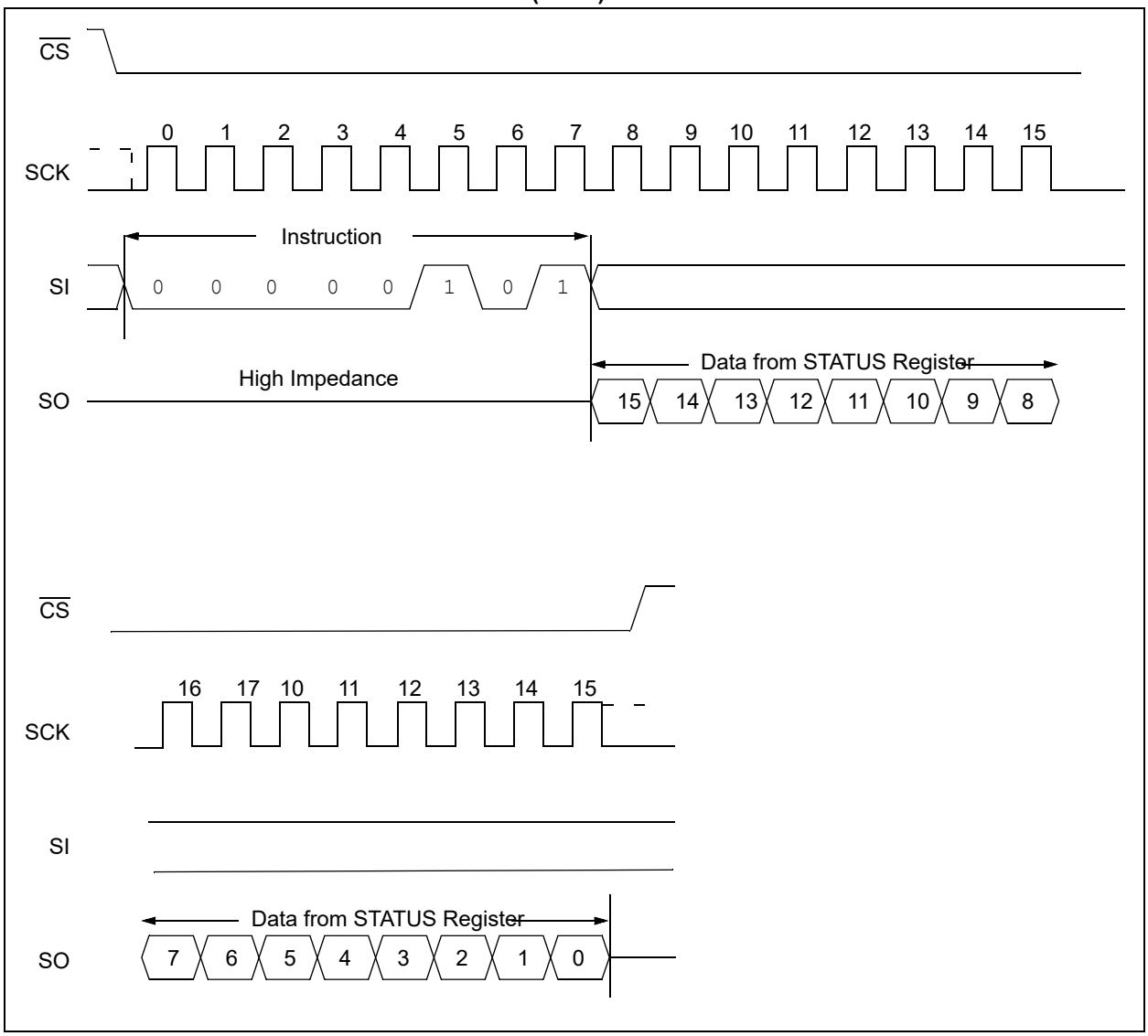

Downloaded from Arrow.com.

3.13 WRITE STATUS REGISTER INSTRUCTION

The Write STATUS Register instruction (WRSR) (Figure 3-29) allows the user to write to the bits in the STATUS register, as shown in Table 3-2. This allows for setting of the device operating mode. This instruction is supported in SPI mode, SDI mode and SQI mode.

The device will reject a WRSR instruction that has an insufficient number of clocks in the command byte. The device will reject a WRSR instruction with less than eight bits of data.

The device will accept a WRSR instruction with one byte of data, which corresponds to bit 15 to bit 8 of the STATUS register. The device will accept a WRSR instruction with greater than eight bits of data but less than 16 bits of data, in which case only the first eight bits of data corresponding to STATUS register bits 15 to 8 are accepted. The device will accept a WRSR instruction with greater than 16 bit of data, in which case only the first 16 bits of data corresponding to STATUS register bits 15 to 0 are accepted.

FIGURE 3-29: WRITE STATUS REGISTER (WRSR)

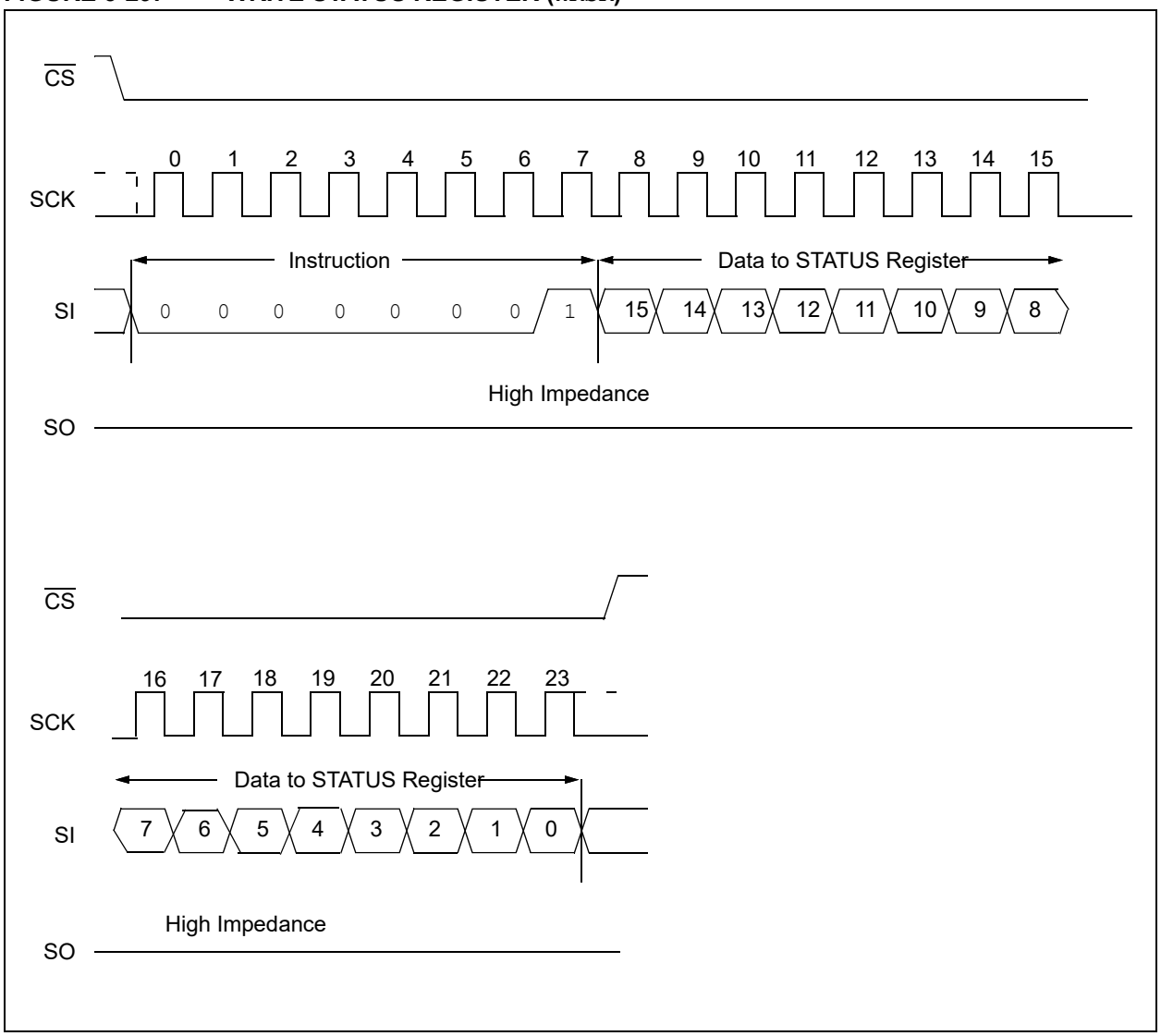

© 2024 Microchip Technology Inc. and its subsidiaries

Downloaded from Arrow.com.

3.14 VBAT

The 23LCV04M features an internal switch that will maintain the SRAM contents through battery backup. In the event that the VCC supply is not available, the voltage applied to the VBAT pin serves as the backup supply. The VBAT trip point is the point at which the device switches to the VBAT supply and is typically 1.85V (VTRIP specification). When VCC falls below the VTRIP point, the system will continue to maintain the SRAM contents. The following conditions apply:

TABLE 3-1: DEVICE POWERED BY POWER SUPPLY OR EXTERNAL BATTERY

Supply condition	READ/WRITE ACCESS	POWERED BY
VCC < VTRIP	NO	VBAT
VCC > VTRIP	YES	VCC

3.15 ERROR CORRECTION CODE (ECC)

The 23XX04M features an effective method of adding reliability to the memory array through the use of Error Correction Code. ECC bits are added to the SRAM data array, which store parity data calculated from the array data. Six extra bits of ECC Data are calculated and stored for every four bytes of user data that is written. Upon reading the data at any valid address, the array data in that four-byte block are checked against the ECC bits parity calculation, and any single-bit error, the most common kind, will be corrected automatically. The ECC bits to be stored are calculated during a write to the array. The ECC bits are calculated based on all 32 bits in a four-byte block and are stored near the corresponding 32 data bits (4 bytes) of array data. The ECC bits are stored alongside the array data but are not accessible to the user.

3.15.1 ECC BIT CALCULATION

The ECC bit encoding and decoding are done in logic, generating six parity bits for every 32-bits, or four bytes, of array memory on four-byte boundaries. Any time one or more bytes of memory within a four-byte block of data is written, the ECC bits for all 32 bits are updated and stored simultaneously. During read operations of any particular byte of data, the data in the corresponding four-byte block of data are calculated and compared against the stored ECC bits. If there is a difference, the ECC mechanism generates a code to indicate which of the 32 data bits is in error and will invert and correct it as it is sent out. This mechanism is effective in correcting any single-bit error, which is the most common type. It cannot fix more than one error in any block of four bytes.

3.16 POWER UP

The serial SRAM enters a known state at power-up. The device is in a low-power state with $\overline{CS}$ = 1, a high-to-low transition is required on the $\overline{CS}$ line to enter an active state. The initial communication mode is SPI for the 23XX04M, and the STATUS register is at the default value, except where VBAT is used, in which case the previous STATUS register setting and communication mode are retained.

If VCC falls below VMIN operating voltage during active communication, such as `WRITE`, then data are not guaranteed and data corruption may occur.

It is possible that, after a brownout condition, a host processor may experience a reset while the memory device may not due to differences in PoR levels. For that reason, it is recommended that the host send the `RSTIO` command before attempting to begin communication with the memory device every time it reboots. The device will accept a `RSTIO` command with eight clocks with all SIO pins high, regardless of current communication mode. Once communication is established in SPI mode, reading or writing data to the array or to the STATUS register, or setting other communication modes can proceed.

© 2024 Microchip Technology Inc. and its subsidiaries

Downloaded from Arrow.com.

4.0 PACKAGING INFORMATION

4.1 Package Marking Information

8-Lead PDIP

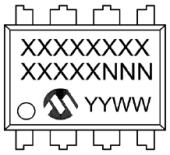

Example:

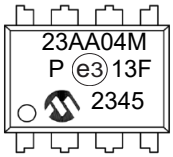

8-Lead SOIC (3.90 mm)

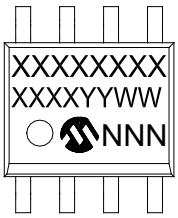

Example:

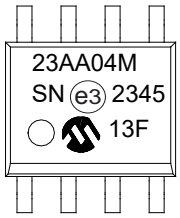

8-Lead TSSOP

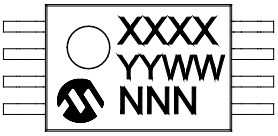

Example:

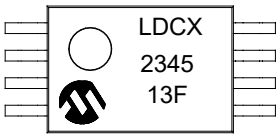

© 2024 Microchip Technology Inc. and its subsidiaries

Downloaded from Arrow.com.

14-Lead PDIP

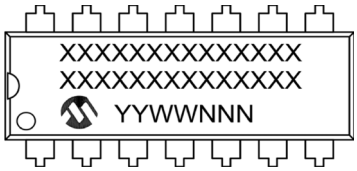

Example:

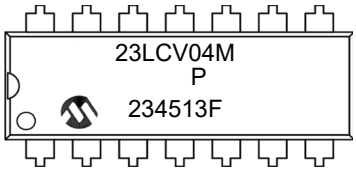

14-Lead SOIC (3.90 mm)

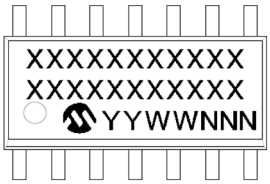

Example:

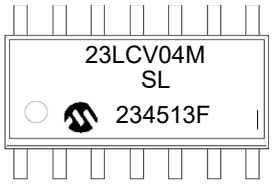

14-Lead TSSOP

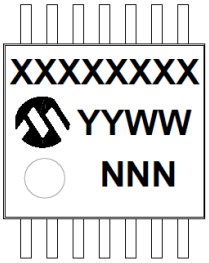

Example:

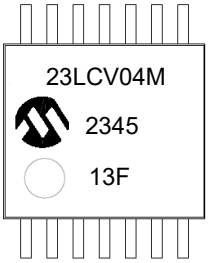

Part Number	1st Line Marking Codes		
	PDIP	SOIC	TSSOP
23AA04M	23AA04M	23AA04M	LDCX
23LCV04M	23LCV04M	23LCV04M	23LCV04M

Legend:	XX...X	Part number or part number code
	Y	Year code (last digit of calendar year)
	YY	Year code (last 2 digits of calendar year)
	WW	Week code (week of January 1 is week ‘01’)
	NNN	Alphanumeric traceability code (2 characters for small packages)
	(e3)	RoHS-compliant JEDEC® designator for Matte Tin (Sn)

Note: For very small packages with no room for the RoHS-compliant JEDEC® designator (e3), the marking will only appear on the outer carton or reel label.

Note: In the event the full Microchip part number cannot be marked on one line, it will be carried over to the next line, thus limiting the number of available characters for customer-specific information.

Downloaded from Arrow.com.

8-Lead Plastic Dual In-Line (P) - 300 mil Body [PDIP]

Note:	For the most current package drawings, please see the Microchip Packaging Specification located at http://www.microchip.com/packaging

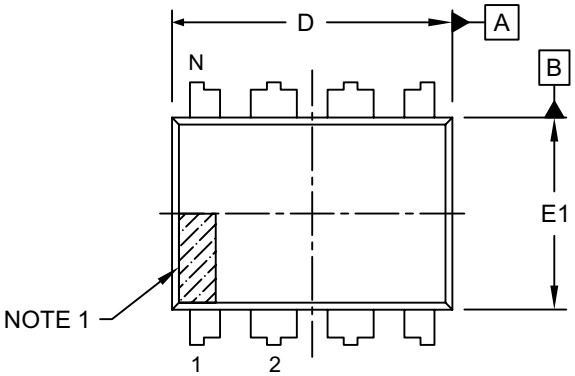

TOP VIEW

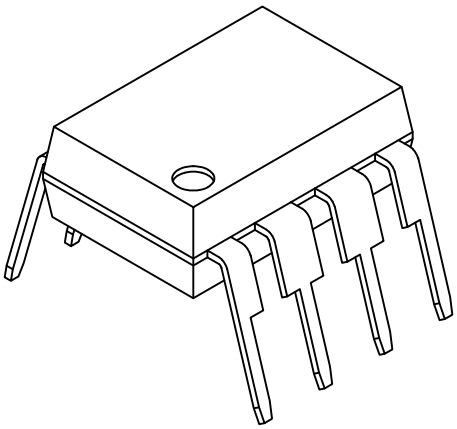

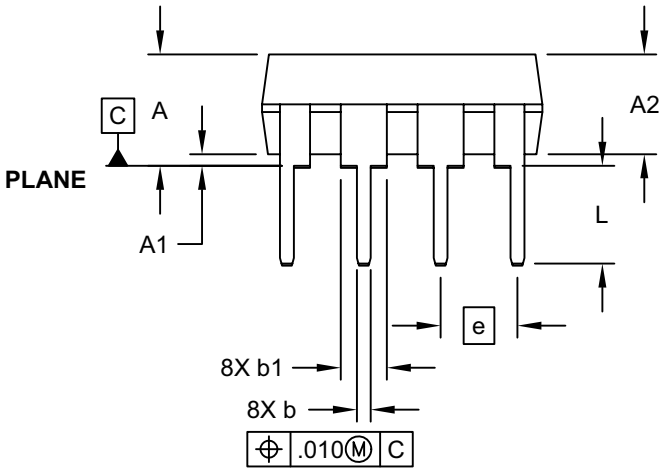

SIDE VIEW

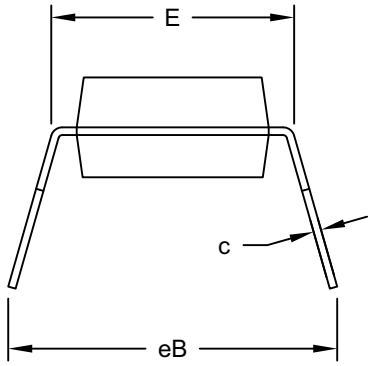

END VIEW

Microchip Technology Drawing No. C04-018-P Rev G Sheet 1 of 2

© 2024 Microchip Technology Inc. and its subsidiaries

Downloaded from Arrow.com.

8-Lead Plastic Dual In-Line (P) - 300 mil Body [PDIP]

Note: For the most current package drawings, please see the Microchip Packaging Specification located at http://www.microchip.com/packaging

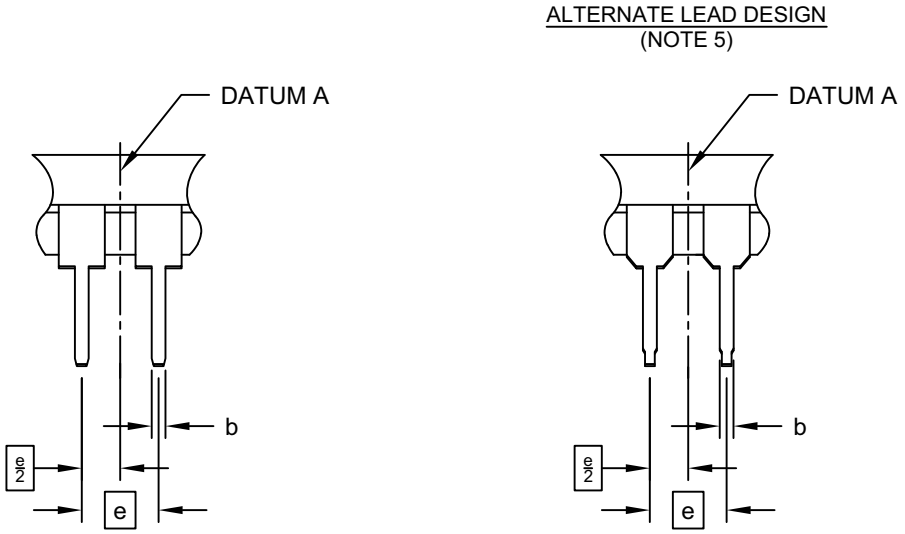

Units		INCHES		
Dimension Limits		MIN	NOM	MAX
Number of Pins	N	8		
Pitch	e	.100 BSC		
Top to Seating Plane	A	-	-	.210
Molded Package Thickness	A2	.115	.130	.195
Base to Seating Plane	A1	.015	-	-
Shoulder to Shoulder Width	E	.290	.310	.325
Molded Package Width	E1	.240	.250	.280
Overall Length	D	.348	.365	.400
Tip to Seating Plane	L	.115	.130	.150
Lead Thickness	c	.008	.010	.015
Upper Lead Width	b1	.040	.060	.070
Lower Lead Width	b	.014	.018	.022
Overall Row Spacing §	eB	-	-	.430

Notes:

1. Pin 1 visual index feature may vary, but must be located within the hatched area.
2. § Significant Characteristic
3. Dimensions D and E1 do not include mold flash or protrusions. Mold flash or protrusions shall not exceed .010" per side.
4. Dimensioning and tolerancing per ASME Y14.5M
   BSC: Basic Dimension. Theoretically exact value shown without tolerances.
5. Lead design above seating plane may vary, based on assembly vendor.

Microchip Technology Drawing No. C04-018-P Rev G Sheet 2 of 2

Downloaded from Arrow.com.

8-Lead Plastic Small Outline (SN) - Narrow, 3.90 mm (.150 In.) Body [SOIC]

Note: For the most current package drawings, please see the Microchip Packaging Specification located at http://www.microchip.com/packaging

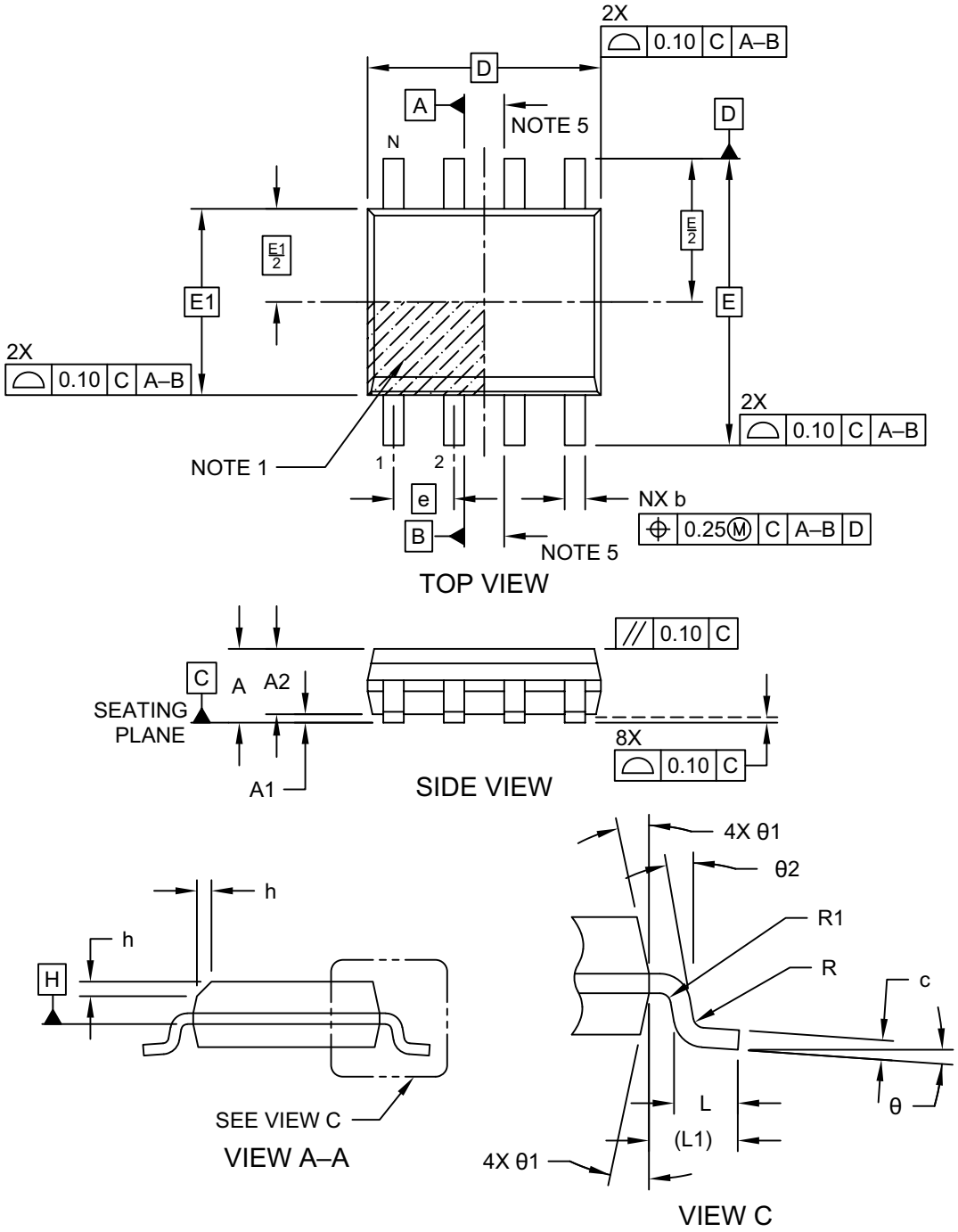

Microchip Technology Drawing No. C04-057-SN Rev K Sheet 1 of 2

© 2024 Microchip Technology Inc. and its subsidiaries

Downloaded from Arrow.com.

8-Lead Plastic Small Outline (SN) - Narrow, 3.90 mm (.150 In.) Body [SOIC]

Note: For the most current package drawings, please see the Microchip Packaging Specification located at http://www.microchip.com/packaging

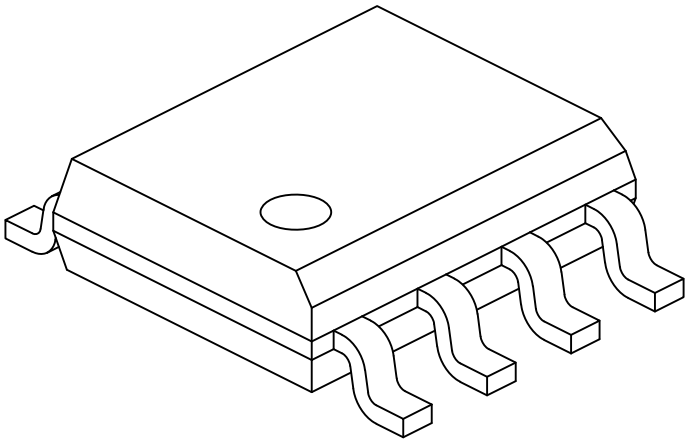

Units		MILLIMETERS		
Dimension Limits		MIN	NOM	MAX
Number of Pins	N	8		
Pitch	e	1.27 BSC		
Overall Height	A	–	–	1.75
Molded Package Thickness	A2	1.25	–	-
Standoff §	A1	0.10	–	0.25
Overall Width	E	6.00 BSC		
Molded Package Width	E1	3.90 BSC		
Overall Length	D	4.90 BSC		
Chamfer (Optional)	h	0.25	–	0.50
Foot Length	L	0.40	–	1.27
Footprint	L1	1.04 REF		
Lead Thickness	c	0.17	–	0.25
Lead Width	b	0.31	–	0.51
Lead Bend Radius	R	0.07	–	–
Lead Bend Radius	R1	0.07	–	–
Foot Angle	θ	0°	–	8°
Mold Draft Angle	θ1	5°	–	15°
Lead Angle	θ2	0°	–	–

Notes:

1. Pin 1 visual index feature may vary, but must be located within the hatched area.
2. § Significant Characteristic
3. Dimensions D and E1 do not include mold flash or protrusions. Mold flash or protrusions shall not exceed 0.15mm per side.
4. Dimensioning and tolerancing per ASME Y14.5M
   BSC: Basic Dimension. Theoretically exact value shown without tolerances.
   REF: Reference Dimension, usually without tolerance, for information purposes only.
5. Datums A & B to be determined at Datum H.

Microchip Technology Drawing No. C04-057-SN Rev K Sheet 2 of 2

Downloaded from Arrow.com.

8-Lead Plastic Small Outline (SN) - Narrow, 3.90 mm (.150 In.) Body [SOIC]

Note: For the most current package drawings, please see the Microchip Packaging Specification located at http://www.microchip.com/packaging

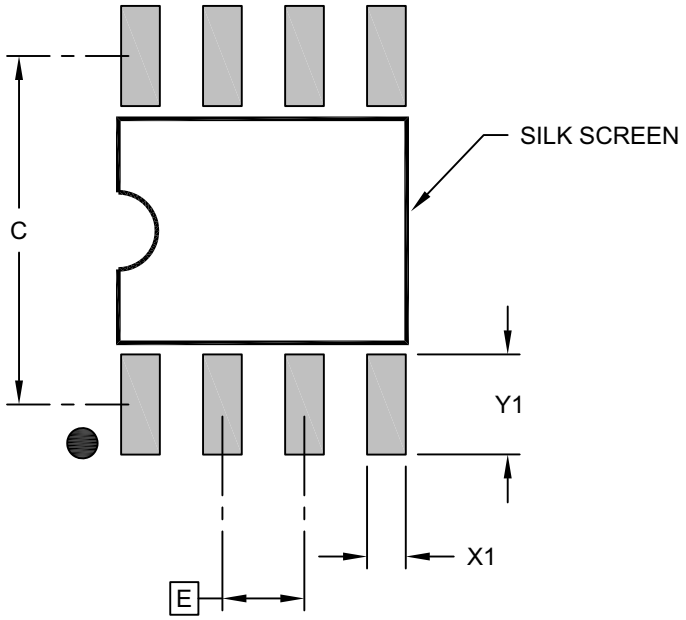

RECOMMENDED LAND PATTERN

Units		MILLIMETERS		
Dimension Limits		MIN	NOM	MAX
Contact Pitch	E	1.27 BSC		
Contact Pad Spacing	C		5.40	
Contact Pad Width (X8)	X1			0.60
Contact Pad Length (X8)	Y1			1.55

Notes:

1. Dimensioning and tolerancing per ASME Y14.5M
   BSC: Basic Dimension. Theoretically exact value shown without tolerances.

Microchip Technology Drawing C04-2057-SN Rev K

© 2024 Microchip Technology Inc. and its subsidiaries

Downloaded from Arrow.com.

8-Lead Plastic Thin Shrink Small Outline (ST) - 4.4 mm Body [TSSOP]

Note: For the most current package drawings, please see the Microchip Packaging Specification located at http://www.microchip.com/packaging

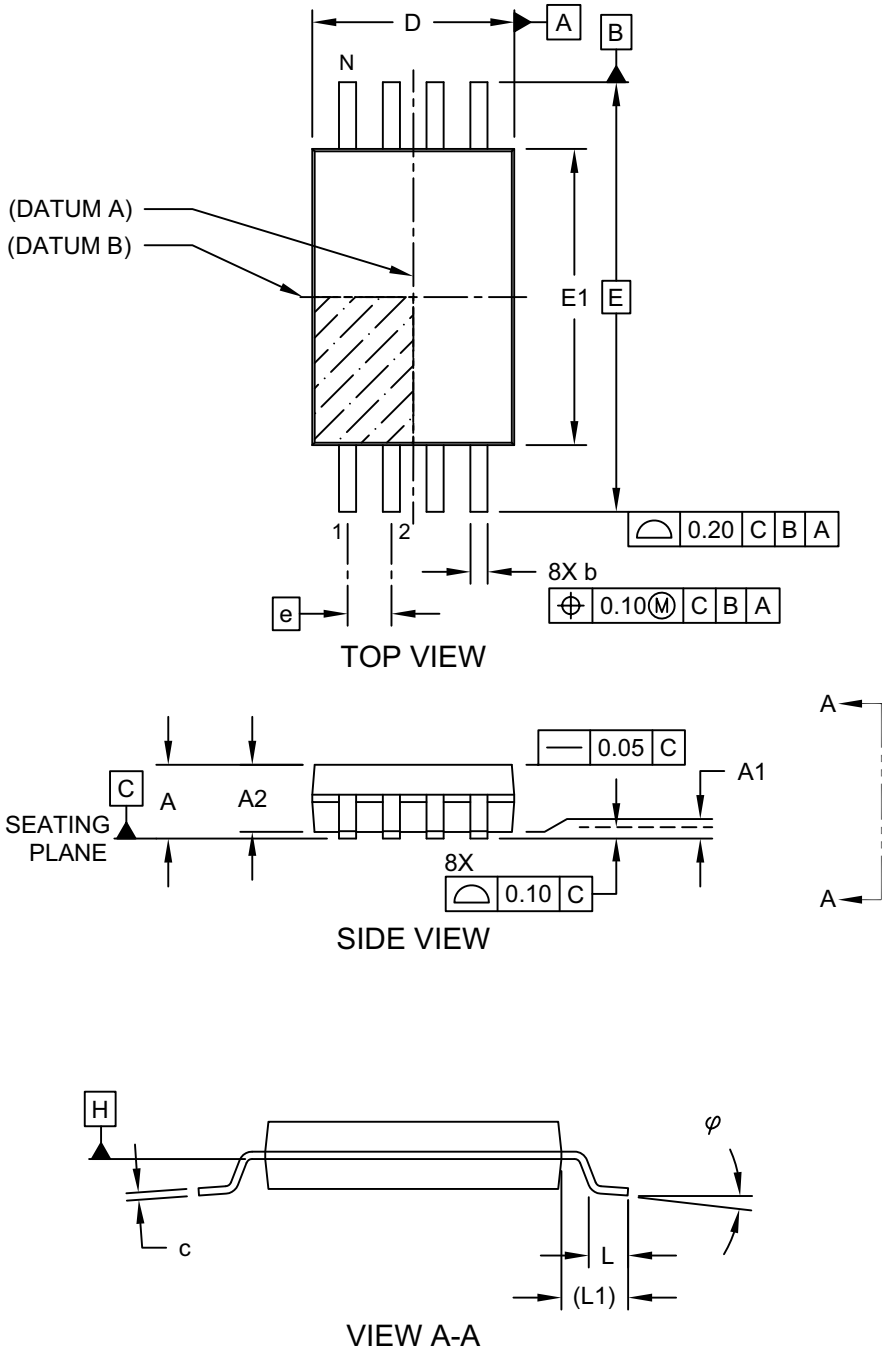

Microchip Technology Drawing C04-086 Rev C Sheet 1 of 2

Downloaded from Arrow.com.

8-Lead Plastic Thin Shrink Small Outline (ST) - 4.4 mm Body [TSSOP]

Note: For the most current package drawings, please see the Microchip Packaging Specification located at http://www.microchip.com/packaging

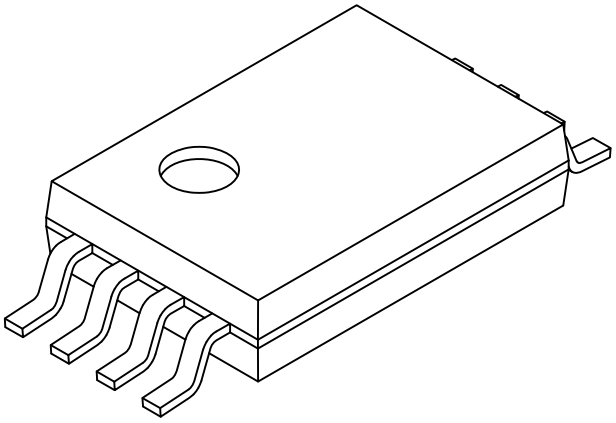

Units		MILLIMETERS		
Dimension Limits		MIN	NOM	MAX
Number of Pins	N	8		
Pitch	e	0.65 BSC		
Overall Height	A	-	-	1.20
Molded Package Thickness	A2	0.80	1.00	1.05
Standoff	A1	0.05	-	-
Overall Width	E		6.40 BSC	
Molded Package Width	E1	4.30	4.40	4.50
Overall Length	D	2.90	3.00	3.10
Foot Length	L	0.45	0.60	0.75
Footprint	L1	1.00 REF		
Lead Thickness	c	0.09	-	0.25
Foot Angle	φ	0°	4°	8°
Lead Width	b	0.19	-	0.30

Notes:

1. Pin 1 visual index feature may vary, but must be located within the hatched area.
2. Dimensions D and E1 do not include mold flash or protrusions. Mold flash or protrusions shall not exceed 0.20mm per side.
3. Dimensioning and tolerancing per ASME Y14.5M

   BSC: Basic Dimension. Theoretically exact value shown without tolerances.

   REF: Reference Dimension, usually without tolerance, for information purposes only.

Microchip Technology Drawing C04-086 Rev C Sheet 2 of 2

© 2024 Microchip Technology Inc. and its subsidiaries

Downloaded from Arrow.com.

8-Lead Plastic Thin Shrink Small Outline (ST) - 4.4 mm Body [TSSOP]

Note: For the most current package drawings, please see the Microchip Packaging Specification located at http://www.microchip.com/packaging

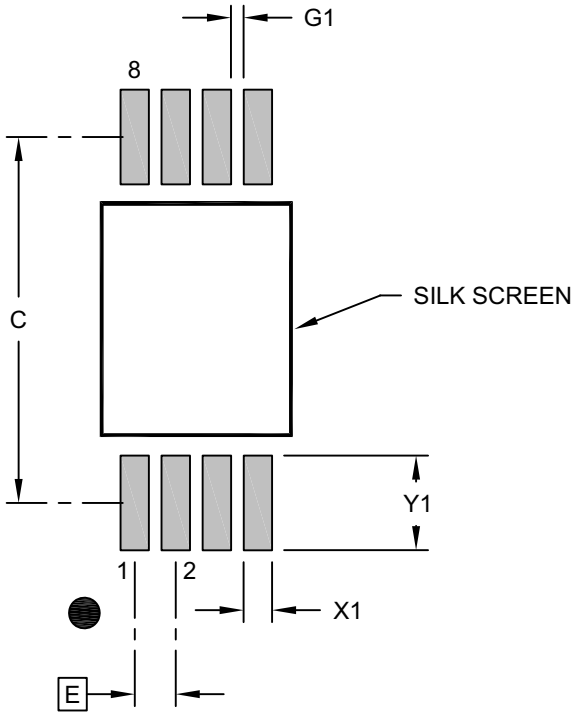

RECOMMENDED LAND PATTERN

Units		MILLIMETERS		
Dimension Limits		MIN	NOM	MAX
Contact Pitch	E	0.65 BSC		
Contact Pad Spacing	C		5.80	
Contact Pad Width (X8)	X1			0.45
Contact Pad Length (X8)	Y1			1.50
Contact Pad to Center Pad (X6)	G1	0.20		

Notes:

1. Dimensioning and tolerancing per ASME Y14.5M
   BSC: Basic Dimension. Theoretically exact value shown without tolerances.
2. For best soldering results, thermal vias, if used, should be filled or tented to avoid solder loss during reflow process

Microchip Technology Drawing C04-2086 Rev B

© 2024 Microchip Technology Inc. and its subsidiaries

Downloaded from Arrow.com.

14-Lead Plastic Dual In-Line (P) - .300 In. Body [PDIP]

Note: For the most current package drawings, please see the Microchip Packaging Specification located at http://www.microchip.com/packaging

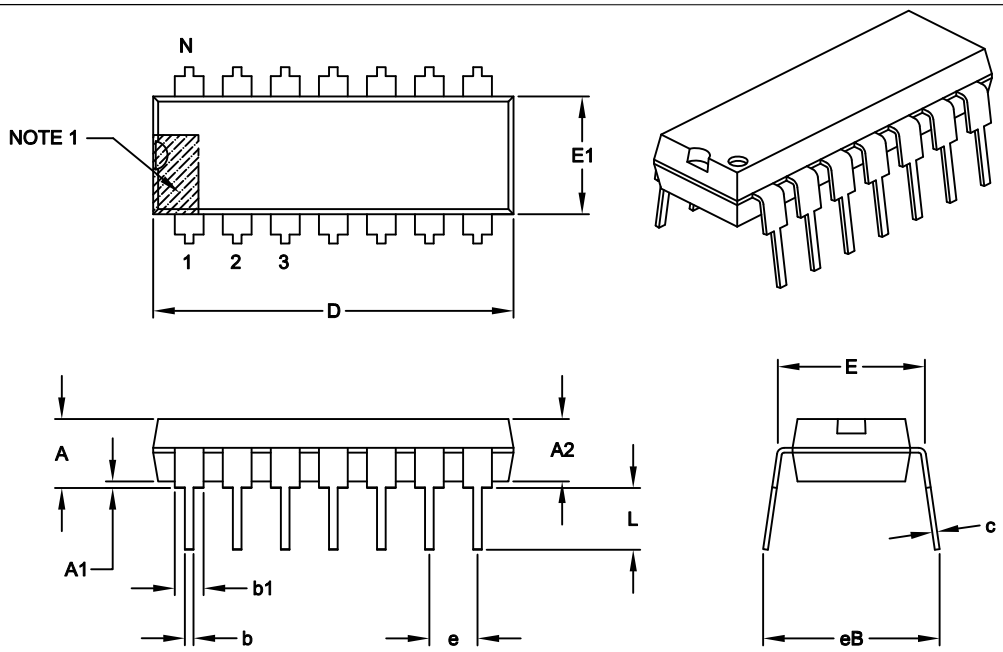

Units		INCHES		
Dimension Limits		MIN	NOM	MAX
Number of Pins	N	14		
Pitch	e	.100 BSC		
Top to Seating Plane	A	-	-	.210
Molded Package Thickness	A2	.115	.130	.195
Base to Seating Plane	A1	.015	-	-
Shoulder to Shoulder Width	E	.290	.310	.325
Molded Package Width	E1	.240	.250	.280
Overall Length	D	.735	.750	.775
Tip to Seating Plane	L	.115	.130	.150
Lead Thickness	c	.008	.010	.015
Upper Lead Width	b1	.045	.060	.070
Lower Lead Width	b	.014	.018	.022
Overall Row Spacing §	eB	-	-	.430

Notes:

1. Pin 1 visual index feature may vary, but must be located within the hatched area.
2. § Significant Characteristic
3. Dimensions D and E1 do not include mold flash or protrusions. Mold flash or protrusions shall not exceed .010" per side.
4. Dimensioning and tolerancing per ASME Y14.5M
   BSC: Basic Dimension. Theoretically exact value shown without tolerances.

Microchip Technology Drawing No. C04-005B

© 2024 Microchip Technology Inc. and its subsidiaries

Downloaded from Arrow.com.

14-Lead Plastic Small Outline (SL) - Narrow, 3.90 mm Body [SOIC]

Note: For the most current package drawings, please see the Microchip Packaging Specification located at http://www.microchip.com/packaging

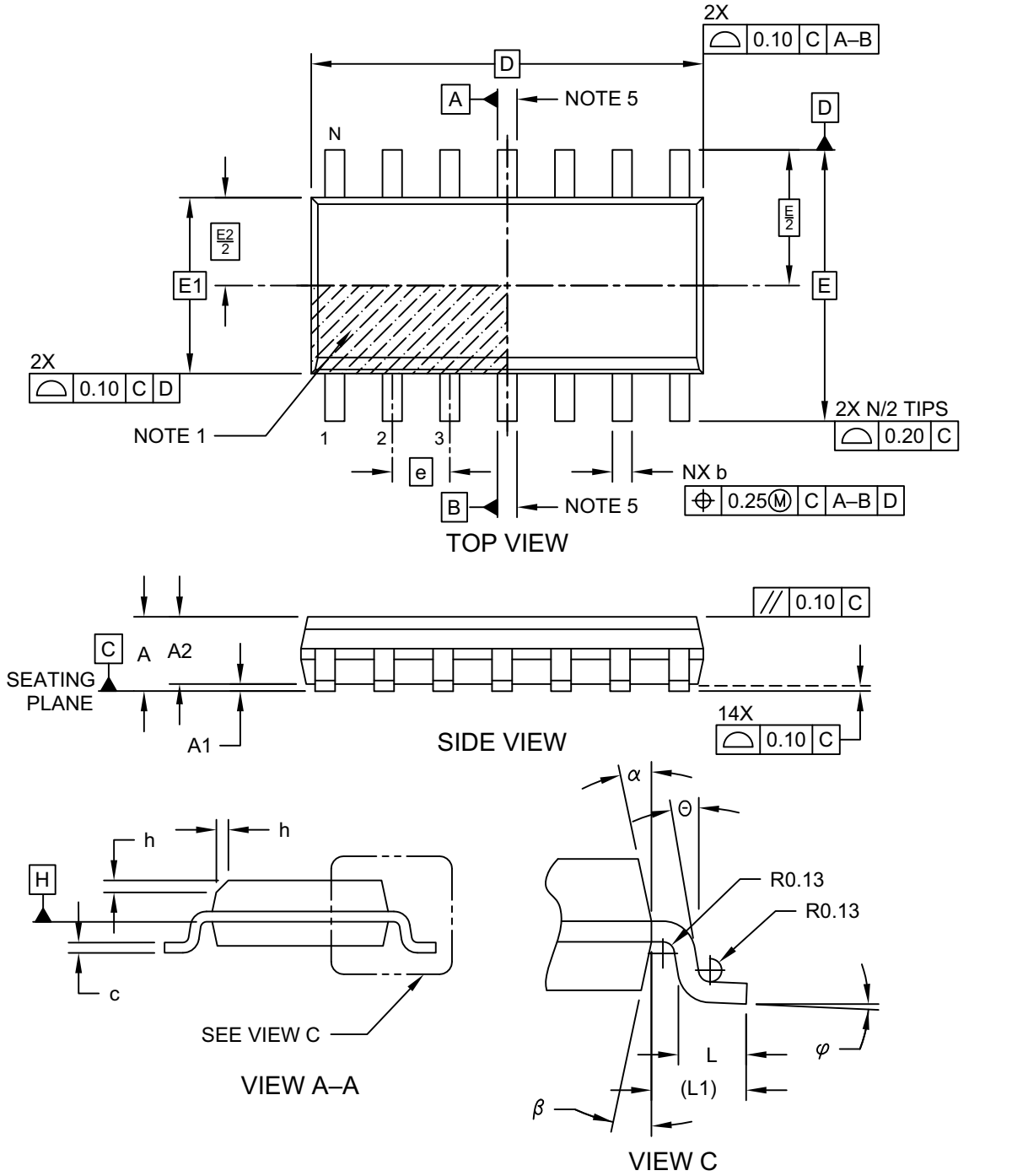

Microchip Technology Drawing No. C04-065-SL Rev D Sheet 1 of 2

Downloaded from Arrow.com.

14-Lead Plastic Small Outline (SL) - Narrow, 3.90 mm Body [SOIC]

Note: For the most current package drawings, please see the Microchip Packaging Specification located at http://www.microchip.com/packaging

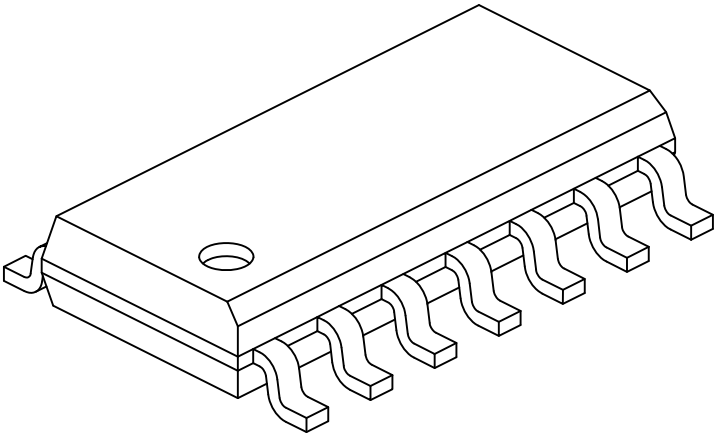

Units		MILLIMETERS		
Dimension Limits		MIN	NOM	MAX
Number of Pins	N	14		
Pitch	e	1.27 BSC		
Overall Height	A	-	-	1.75
Molded Package Thickness	A2	1.25	-	-
Standoff §	A1	0.10	-	0.25
Overall Width	E	6.00 BSC		
Molded Package Width	E1	3.90 BSC		
Overall Length	D	8.65 BSC		
Chamfer (Optional)	h	0.25	-	0.50
Foot Length	L	0.40	-	1.27
Footprint	L1	1.04 REF		
Lead Angle	Θ	0°	-	-
Foot Angle	φ	0°	-	8°
Lead Thickness	c	0.10	-	0.25
Lead Width	b	0.31	-	0.51
Mold Draft Angle Top	α	5°	-	15°
Mold Draft Angle Bottom	β	5°	-	15°

Notes:

1. Pin 1 visual index feature may vary, but must be located within the hatched area.
2. § Significant Characteristic
3. Dimension D does not include mold flash, protrusions or gate burrs, which shall not exceed 0.15 mm per end. Dimension E1 does not include interlead flash or protrusion, which shall not exceed 0.25 mm per side.
4. Dimensioning and tolerancing per ASME Y14.5M
   BSC: Basic Dimension. Theoretically exact value shown without tolerances.
   REF: Reference Dimension, usually without tolerance, for information purposes only.
5. Datums A & B to be determined at Datum H.

Microchip Technology Drawing No. C04-065-SL Rev D Sheet 2 of 2

© 2024 Microchip Technology Inc. and its subsidiaries

Downloaded from Arrow.com.

14-Lead Plastic Small Outline (SL) - Narrow, 3.90 mm Body [SOIC]

Note: For the most current package drawings, please see the Microchip Packaging Specification located at http://www.microchip.com/packaging

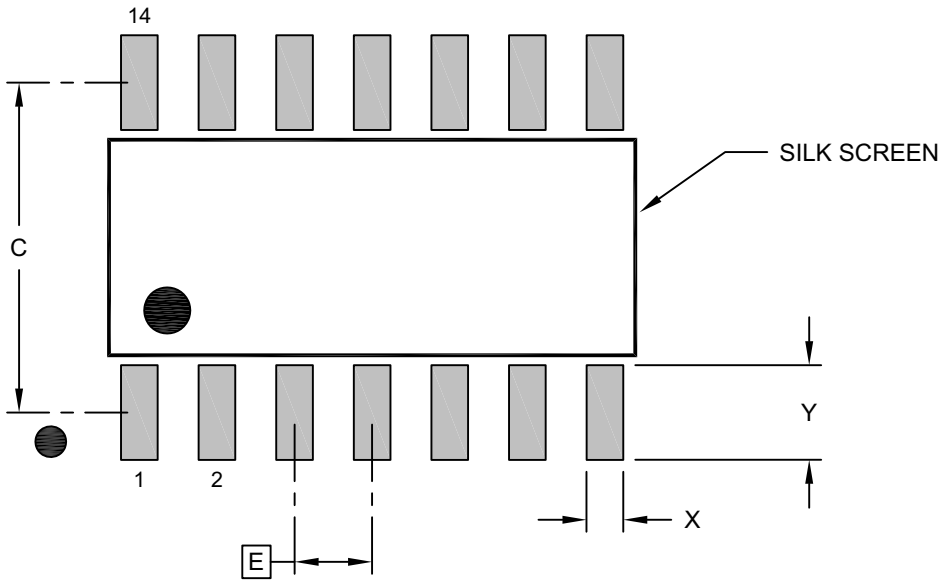

RECOMMENDED LAND PATTERN

Units		MILLIMETERS		
Dimension Limits		MIN	NOM	MAX
Contact Pitch	E		1.27 BSC	
Contact Pad Spacing	C		5.40	
Contact Pad Width (X14)	X			0.60
Contact Pad Length (X14)	Y			1.55

Notes:

1. Dimensioning and tolerancing per ASME Y14.5M
   BSC: Basic Dimension. Theoretically exact value shown without tolerances.

Microchip Technology Drawing No. C04-2065-SL Rev D

Downloaded from Arrow.com.

14-Lead Plastic Thin Shrink Small Outline Package [ST] - 4.4 mm Body [TSSOP]

Note:	For the most current package drawings, please see the Microchip Packaging Specification located at http://www.microchip.com/packaging

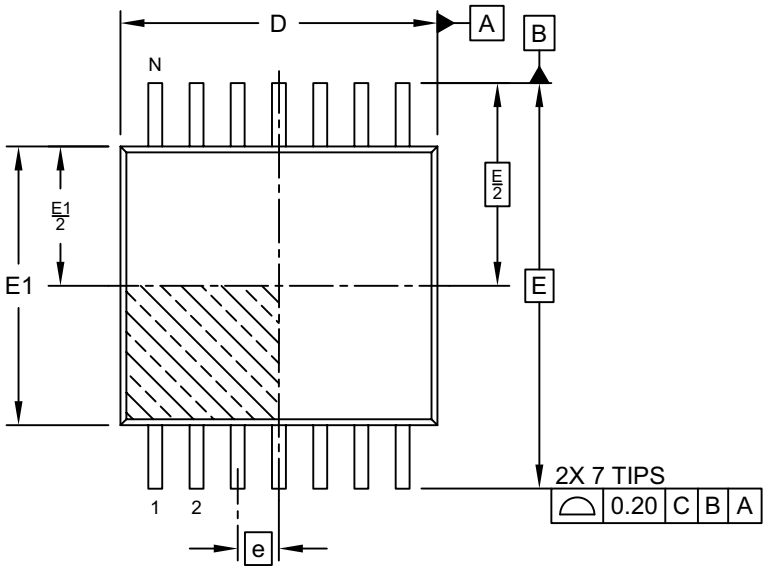

TOP VIEW

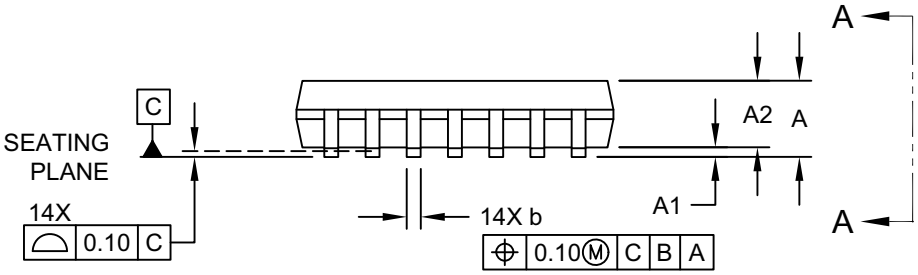

SIDE VIEW

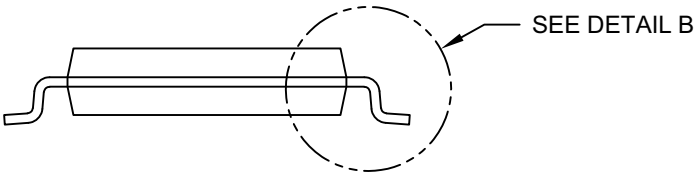

VIEW A–A

Microchip Technology Drawing C04-087-ST Rev F Sheet 1 of 2

© 2024 Microchip Technology Inc. and its subsidiaries

Downloaded from Arrow.com.

14-Lead Plastic Thin Shrink Small Outline Package [ST] - 4.4 mm Body [TSSOP]

Note: For the most current package drawings, please see the Microchip Packaging Specification located at http://www.microchip.com/packaging

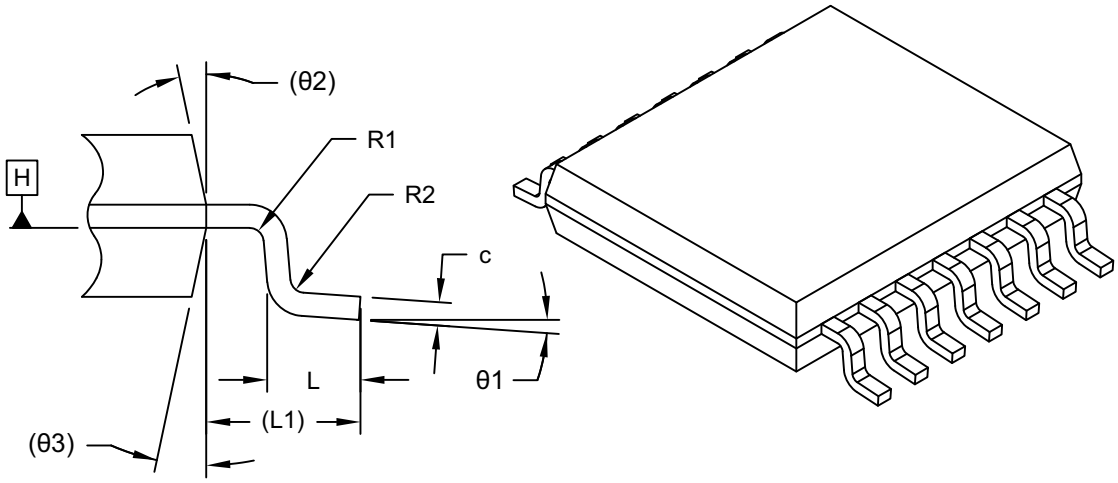

DETAIL B

Units		MILLIMETERS		
Dimension Limits		MIN	NOM	MAX
Number of Terminals	N	14		
Pitch	e	0.65 BSC		
Overall Height	A	–	–	1.20
Standoff	A1	0.05	–	0.15
Molded Package Thickness	A2	0.80	1.00	1.05
Overall Length	D	4.90	5.00	5.10
Overall Width	E	6.40 BSC		
Molded Package Width	E1	4.30	4.40	4.50
Terminal Width	b	0.19	–	0.30
Terminal Thickness	c	0.09	–	0.20
Terminal Length	L	0.45	0.60	0.75
Footprint	L1	1.00 REF		
Lead Bend Radius	R1	0.09	–	–
Lead Bend Radius	R2	0.09	–	–
Foot Angle	θ1	0°	–	8°
Mold Draft Angle	θ2	–	12° REF	–
Mold Draft Angle	θ3	–	12° REF	–

Notes:

1. Pin 1 visual index feature may vary, but must be located within the hatched area.
2. Dimensioning and tolerancing per ASME Y14.5M
   BSC: Basic Dimension. Theoretically exact value shown without tolerances.
   REF: Reference Dimension, usually without tolerance, for information purposes only.

Microchip Technology Drawing C04-087-ST Rev F Sheet 2 of 2

Downloaded from Arrow.com.

14-Lead Plastic Thin Shrink Small Outline Package [ST] – 4.4 mm Body [TSSOP]

Note: For the most current package drawings, please see the Microchip Packaging Specification located at http://www.microchip.com/packaging

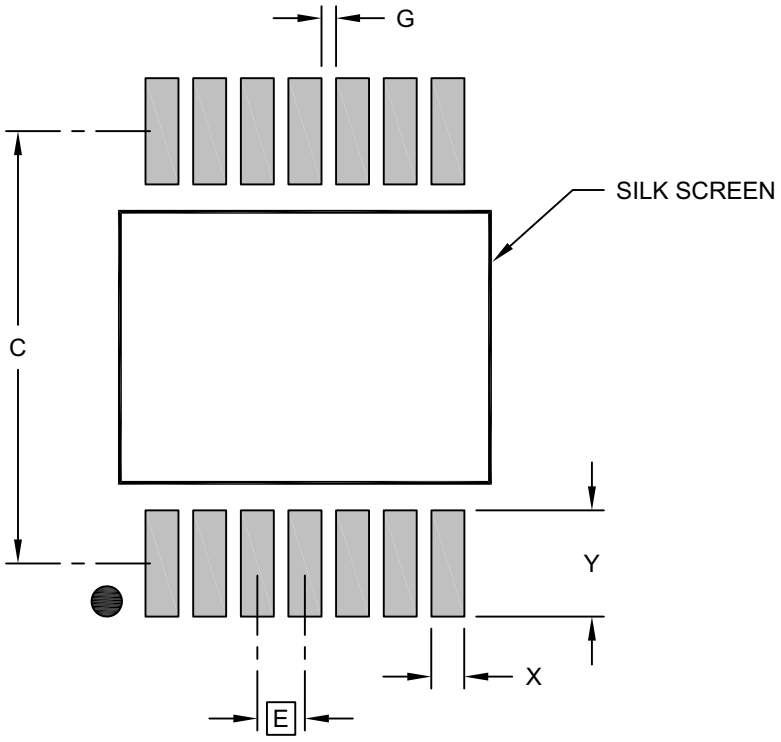

RECOMMENDED LAND PATTERN

Units		MILLIMETERS		
Dimension Limits		MIN	NOM	MAX
Contact Pitch	E	0.65 BSC		
Contact Pad Spacing	C		5.90	
Contact Pad Width (X14)	X			0.45
Contact Pad Length (X14)	Y			1.45
Contact Pad to Contact Pad (X12)	G	0.20		

Notes:

1. Dimensioning and tolerancing per ASME Y14.5M
   BSC: Basic Dimension. Theoretically exact value shown without tolerances.

Microchip Technology Drawing C04-2087-ST Rev F

© 2024 Microchip Technology Inc. and its subsidiaries

Downloaded from Arrow.com.

APPENDIX A: REVISION HISTORY

Revision A (January 2024)

Initial document release.

Downloaded from Arrow.com.

THE MICROCHIP WEBSITE

Microchip provides online support via our website at https://www.microchip.com. This website is used to make files and information easily available to customers. Some of the available content includes:

- **Product Support** – Data sheets and errata, application notes and sample programs, design resources, user's guides and hardware support documents, the latest software releases and archived software
- **General Technical Support** – Frequently Asked Questions (FAQs), technical support requests, online discussion groups and a Microchip design partner program member listing
- **Business of Microchip** – Product selector and ordering guides, the latest Microchip press releases, a listing of seminars and events, listings of Microchip sales offices, distributors and factory representatives

PRODUCT CHANGE NOTIFICATION SERVICE

Microchip's product change notification service helps keep customers current on Microchip products. Subscribers will receive email notifications whenever there are changes, updates, revisions or errata related to a specified product family or development tool of interest.

To register, go to https://www.microchip.com/pcn and follow the registration instructions.

CUSTOMER SUPPORT

Users of Microchip products can receive assistance through several channels:

- Distributor or Representative
- Local Sales Office
- Embedded Solutions Engineer (ESE)
- Technical Support

Customers should contact their distributor, representative or ESE for support. Local sales offices are also available to help customers. A listing of sales offices and locations is included in this document.

Technical support is available through the website at: https://www.microchip.com/support

© 2024 Microchip Technology Inc. and its subsidiaries

Downloaded from Arrow.com.

PRODUCT IDENTIFICATION SYSTEM

To order or obtain information, e.g., on pricing or delivery, refer to the factory or the listed sales office.

PART NO.	[X][1]	-X	/XX [2]
Device	Tape and Reel Option	Temperature Range	Package

Device[2]:	23AA04M:		4-Mbit, 1.7V - 3.6V, Serial SRAM
	23LCV04M:		4-Mbit, 2.2V - 3.6V, Serial SRAM with Battery Backup
Tape and Reel:	Blank	=	Standard packaging (tube)
	T	=	Tape and Reel[1]
Temperature Range:	I	=	-40°C to +85°C (Industrial)
Package[2]:	P	=	Plastic PDIP (300 mil body), 8-lead
	P	=	Plastic PDIP (300 mil body), 14-lead
	SN	=	Plastic SOIC (3.90 mm body), 8-lead
	SL	=	Plastic SOIC (3.90 mm body), 14-lead
	ST	=	Plastic TSSOP (4.4 mm body), 8-lead
	ST	=	Plastic TSSOP (4.4 mm body), 14-lead

Examples:

a) 23AA04M-I/ST: 4-Mbit, 1.7V-3.6V Serial SRAM, Industrial temp., 8-lead TSSOP package
b) 23LCV04MT-I/SL: 4-Mbit, 2.2V-3.6V Serial SRAM, Industrial temp., Tape and Reel, 14-lead SOIC package
c) 23AA04M-I/P: 4-Mbit, 1.7V-3.6V Serial SRAM, Industrial temp., 8-lead PDIP package
d) 23LCV04M-I/ST: 4-Mbit, 2.2V-3.6V Serial SRAM, Industrial temp., 14-lead TSSOP package
e) 23AA04MT-I/SN: 4-Mbit, 1.7V-3.6V Serial SRAM, Industrial temp., Tape and Reel, 8-lead SOIC package
f) 23LCV04M-I/SL: 4-Mbit, 2.2V-3.6V Serial SRAM, Industrial temp., 14-lead SOIC package
g) 23LCV04M-I/P: 4-Mbit, 2.2V-3.6V Serial SRAM, Industrial temp., 14-lead PDIP package
h) 23AA04M-I/SN: 4-Mbit, 1.7V-3.6V Serial SRAM, Industrial temp., 8-lead SOIC package

Note 1: Tape and Reel identifier only appears in the catalog part number description. This identifier is used for ordering purposes and is not printed on the device package. Check with your Microchip Sales Office for package availability with the Tape and Reel option.

2: 23AA04M is only available in 8-lead packages while 23LCV04M is only available in 14-lead packages.

Downloaded from Arrow.com.

Note the following details of the code protection feature on Microchip products:

- Microchip products meet the specifications contained in their particular Microchip Data Sheet.
- Microchip believes that its family of products is secure when used in the intended manner, within operating specifications, and under normal conditions.
- Microchip values and aggressively protects its intellectual property rights. Attempts to breach the code protection features of Microchip product is strictly prohibited and may violate the Digital Millennium Copyright Act.
- Neither Microchip nor any other semiconductor manufacturer can guarantee the security of its code. Code protection does not mean that we are guaranteeing the product is "unbreakable" Code protection is constantly evolving. Microchip is committed to continuously improving the code protection features of our products.

This publication and the information herein may be used only with Microchip products, including to design, test, and integrate Microchip products with your application. Use of this information in any other manner violates these terms. Information regarding device applications is provided only for your convenience and may be superseded by updates. It is your responsibility to ensure that your application meets with your specifications. Contact your local Microchip sales office for additional support or, obtain additional support at https://www.microchip.com/en-us/support/design-help/client-support-services.

THIS INFORMATION IS PROVIDED BY MICROCHIP "AS IS". MICROCHIP MAKES NO REPRESENTATIONS OR WARRANTIES OF ANY KIND WHETHER EXPRESS OR IMPLIED, WRITTEN OR ORAL, STATUTORY OR OTHERWISE, RELATED TO THE INFORMATION INCLUDING BUT NOT LIMITED TO ANY IMPLIED WARRANTIES OF NON-INFRINGEMENT, MERCHANTABILITY, AND FITNESS FOR A PARTICULAR PURPOSE, OR WARRANTIES RELATED TO ITS CONDITION, QUALITY, OR PERFORMANCE.

IN NO EVENT WILL MICROCHIP BE LIABLE FOR ANY INDIRECT, SPECIAL, PUNITIVE, INCIDENTAL, OR CONSEQUENTIAL LOSS, DAMAGE, COST, OR EXPENSE OF ANY KIND WHATSOEVER RELATED TO THE INFORMATION OR ITS USE, HOWEVER CAUSED, EVEN IF MICROCHIP HAS BEEN ADVISED OF THE POSSIBILITY OR THE DAMAGES ARE FORESEEABLE. TO THE FULLEST EXTENT ALLOWED BY LAW, MICROCHIP'S TOTAL LIABILITY ON ALL CLAIMS IN ANY WAY RELATED TO THE INFORMATION OR ITS USE WILL NOT EXCEED THE AMOUNT OF FEES, IF ANY, THAT YOU HAVE PAID DIRECTLY TO MICROCHIP FOR THE INFORMATION.

Use of Microchip devices in life support and/or safety applications is entirely at the buyer's risk, and the buyer agrees to defend, indemnify and hold harmless Microchip from any and all damages, claims, suits, or expenses resulting from such use. No licenses are conveyed, implicitly or otherwise, under any Microchip intellectual property rights unless otherwise stated.

For information regarding Microchip's Quality Management Systems, please visit www.microchip.com/quality.

Trademarks

The Microchip name and logo, the Microchip logo, Adaptec, AVR, AVR logo, AVR Freaks, BesTime, BitCloud, CryptoMemory, CryptoRF, dsPIC, flexPWR, HELDO, IGLOO, JukeBlox, KeeLoq, Kleer, LANCheck, LinkMD, maXStylus, maXTouch, MediaLB, megaAVR, Microsemi, Microsemi logo, MOST, MOST logo, MPLAB, OptoLyzer, PIC, picoPower, PICSTART, PIC32 logo, PolarFire, Prochip Designer, QTouch, SAM-BA, SenGenuity, SpyNIC, SST, SST Logo, SuperFlash, Symmetricom, SyncServer, Tachyon, TimeSource, tinyAVR, UNI/O, Vectron, and XMEGA are registered trademarks of Microchip Technology Incorporated in the U.S.A. and other countries.

AgileSwitch, ClockWorks, The Embedded Control Solutions Company, EtherSynch, Flashtec, Hyper Speed Control, HyperLight Load, Libero, motorBench, mTouch, Powermite 3, Precision Edge, ProASIC, ProASIC Plus, ProASIC Plus logo, Quiet-Wire, SmartFusion, SyncWorld, TimeCesium, TimeHub, TimePictra, TimeProvider, and ZL are registered trademarks of Microchip Technology Incorporated in the U.S.A.

Adjacent Key Suppression, AKS, Analog-for-the-Digital Age, Any Capacitor, AnyIn, AnyOut, Augmented Switching, BlueSky, BodyCom, Clockstudio, CodeGuard, CryptoAuthentication, CryptoAutomotive, CryptoCompanion, CryptoController, dsPICDEM, dsPICDEM.net, Dynamic Average Matching, DAM, ECAN, Espresso T1S, EtherGREEN, EyeOpen, GridTime, IdealBridge, IGaT, In-Circuit Serial Programming, ICSP, INICnet, Intelligent Paralleling, IntelliMOS, Inter-Chip Connectivity, JitterBlocker, Knob-on-Display, MarginLink, maxCrypto, maxView, memBrain, Mindi, MiWi, MPASM, MPF, MPLAB Certified logo, MPLIB, MPLINK, mSiC, MultiTRAK, NetDetach, Omniscient Code Generation, PICDEM, PICDEM.net, PICkit, PICtail, Power MOS IV, Power MOS 7, PowerSmart, PureSilicon, QMatrix, REAL ICE, Ripple Blocker, RTAX, RTG4, SAM-ICE, Serial Quad I/O, simpleMAP, SimpliPHY, SmartBuffer, SmartHLS, SMART-I.S., storClad, SQI, SuperSwitcher, SuperSwitcher II, Switchtec, SynchroPHY, Total Endurance, Trusted Time, TSHARC, Turing, USBCheck, VariSense, VectorBlox, VeriPHY, ViewSpan, WiperLock, XpressConnect, and ZENA are trademarks of Microchip Technology Incorporated in the U.S.A. and other countries.

SQTP is a service mark of Microchip Technology Incorporated in the U.S.A.

The Adaptec logo, Frequency on Demand, Silicon Storage Technology, and Symmcom are registered trademarks of Microchip Technology Inc. in other countries.

GestIC is a registered trademark of Microchip Technology Germany II GmbH & Co. KG, a subsidiary of Microchip Technology Inc., in other countries.

All other trademarks mentioned herein are property of their respective companies.
© 2024, Microchip Technology Incorporated and its subsidiaries.

All Rights Reserved.

ISBN: 978-1-6683-3783-7

© 2024 Microchip Technology Inc. and its subsidiaries

Downloaded from Arrow.com.

Worldwide Sales and Service

AMERICAS

Corporate Office
2355 West Chandler Blvd.
Chandler, AZ 85224-6199
Tel: 480-792-7200
Fax: 480-792-7277
Technical Support:
http://www.microchip.com/support
Web Address:
www.microchip.com

Atlanta
Duluth, GA
Tel: 678-957-9614
Fax: 678-957-1455

Austin, TX
Tel: 512-257-3370

Boston
Westborough, MA
Tel: 774-760-0087
Fax: 774-760-0088

Chicago
Itasca, IL
Tel: 630-285-0071
Fax: 630-285-0075

Dallas
Addison, TX
Tel: 972-818-7423
Fax: 972-818-2924

Detroit
Novi, MI
Tel: 248-848-4000

Houston, TX
Tel: 281-894-5983

Indianapolis
Noblesville, IN
Tel: 317-773-8323
Fax: 317-773-5453
Tel: 317-536-2380

Los Angeles
Mission Viejo, CA
Tel: 949-462-9523
Fax: 949-462-9608
Tel: 951-273-7800

Raleigh, NC
Tel: 919-844-7510

New York, NY
Tel: 631-435-6000

San Jose, CA
Tel: 408-735-9110
Tel: 408-436-4270

Canada - Toronto
Tel: 905-695-1980
Fax: 905-695-2078

ASIA/PACIFIC

Australia - Sydney
Tel: 61-2-9868-6733

China - Beijing
Tel: 86-10-8569-7000

China - Chengdu
Tel: 86-28-8665-5511

China - Chongqing
Tel: 86-23-8980-9588

China - Dongguan
Tel: 86-769-8702-9880

China - Guangzhou
Tel: 86-20-8755-8029

China - Hangzhou
Tel: 86-571-8792-8115

China - Hong Kong SAR
Tel: 852-2943-5100

China - Nanjing
Tel: 86-25-8473-2460

China - Qingdao
Tel: 86-532-8502-7355

China - Shanghai
Tel: 86-21-3326-8000

China - Shenyang
Tel: 86-24-2334-2829

China - Shenzhen
Tel: 86-755-8864-2200

China - Suzhou
Tel: 86-186-6233-1526

China - Wuhan
Tel: 86-27-5980-5300

China - Xian
Tel: 86-29-8833-7252

China - Xiamen
Tel: 86-592-2388138

China - Zhuhai
Tel: 86-756-3210040

ASIA/PACIFIC

India - Bangalore
Tel: 91-80-3090-4444

India - New Delhi
Tel: 91-11-4160-8631

India - Pune
Tel: 91-20-4121-0141

Japan - Osaka
Tel: 81-6-6152-7160

Japan - Tokyo
Tel: 81-3-6880- 3770

Korea - Daegu
Tel: 82-53-744-4301

Korea - Seoul
Tel: 82-2-554-7200

Malaysia - Kuala Lumpur
Tel: 60-3-7651-7906

Malaysia - Penang
Tel: 60-4-227-8870

Philippines - Manila
Tel: 63-2-634-9065

Singapore
Tel: 65-6334-8870

Taiwan - Hsin Chu
Tel: 886-3-577-8366

Taiwan - Kaohsiung
Tel: 886-7-213-7830

Taiwan - Taipei
Tel: 886-2-2508-8600

Thailand - Bangkok
Tel: 66-2-694-1351

Vietnam - Ho Chi Minh
Tel: 84-28-5448-2100

EUROPE

Austria - Wels
Tel: 43-7242-2244-39
Fax: 43-7242-2244-393

Denmark - Copenhagen
Tel: 45-4485-5910
Fax: 45-4485-2829

Finland - Espoo
Tel: 358-9-4520-820

France - Paris
Tel: 33-1-69-53-63-20
Fax: 33-1-69-30-90-79

Germany - Garching
Tel: 49-8931-9700

Germany - Haan
Tel: 49-2129-3766400

Germany - Heilbronn
Tel: 49-7131-72400

Germany - Karlsruhe
Tel: 49-721-625370

Germany - Munich
Tel: 49-89-627-144-0
Fax: 49-89-627-144-44

Germany - Rosenheim
Tel: 49-8031-354-560

Israel - Ra'anana
Tel: 972-9-744-7705

Italy - Milan
Tel: 39-0331-742611
Fax: 39-0331-466781

Italy - Padova
Tel: 39-049-7625286

Netherlands - Drunen
Tel: 31-416-690399
Fax: 31-416-690340

Norway - Trondheim
Tel: 47-7288-4388

Poland - Warsaw
Tel: 48-22-3325737

Romania - Bucharest
Tel: 40-21-407-87-50

Spain - Madrid
Tel: 34-91-708-08-90
Fax: 34-91-708-08-91

Sweden - Gothenberg
Tel: 46-31-704-60-40

Sweden - Stockholm
Tel: 46-8-5090-4654

UK - Wokingham
Tel: 44-118-921-5800
Fax: 44-118-921-5820

© 2024 Microchip Technology Inc. and its subsidiaries

09/14/21
Downloaded from Arrow.com.