Skywire Nano Global 4G LTE-M Embedded Cellular Modem Datasheet

NimbeLink Corp.

Updated: January 2021

© NimbeLink Corp. 2021. All rights reserved.

NimbeLink Corp. provides this documentation in support of its products for the internal use of its current and prospective customers. The publication of this document does not create any other right or license in any party to use any content contained in or referred to in this document and any modification or redistribution of this document is not permitted.

While efforts are made to ensure accuracy, typographical and other errors may exist in this document. NimbeLink reserves the right to modify or discontinue its products and to modify this and any other product documentation at any time.

All NimbeLink products are sold subject to its published Terms and Conditions, subject to any separate terms agreed with its customers. No warranty of any type is extended by publication of this documentation, including, but not limited to, implied warranties of merchantability, fitness for a particular purpose and non-infringement.

NimbeLink is a registered trademark, and Skywire is a registered trademark, of NimbeLink Corp. All trademarks, service marks and similar designations referenced in this document are the property of their respective owners.

Downloaded from Arrow.com.

Table of Contents

Table of Contents **2**

Introduction **5**
- Scope 5
- Contact Information 5
- Orderable Part Numbers 5
- Additional Resources 5

Product Description **6**
- Device Information 6
- Feature Brief 7
- Block Diagram 10

Modem Specifications **11**
- Device Connectors 11
  - 60-pin Connector (J1) 11
  - Pin Types 12
  - Pinout for Main Modem Connector (J1) 12
  - U.FL Antenna Ports 18
- Electrical Specifications 19
  - Absolute Maximum and Minimum Ratings 19
  - On-Board Capacitance and Inductance 19
  - Recommended Operating Conditions 20
    - Power Input Pins 20
    - ENABLE and nRESET Pins 20
    - External SIM Interface Pins 21
    - Antenna Tuning GPIO Pins 21
    - SWD Interface Pins 22
    - Digital I/O Pins 22
  - Typical Power Consumption 23
    - Power Testing Setup Information 23
    - Power Consumption, Nominal Voltage (VCC=5V) 24
    - Power Consumption, VCC=3.8V 26
- Cellular and GPS Specifications 28
  - Available Technologies and Bands 28
  - LTE CAT-M1 Specifications 28

 © NimbeLink Corp. 2021. All rights reserved.

Downloaded from Arrow.com.

LTE CAT-NB1 and LTE CAT-NB2 Specifications 28
GPS Specifications 29
Mechanical Specifications 29
Modem Mechanical Characteristics 29
Mechanical Drawing (Modem Unmated) 30
Mechanical Drawing (Modem Mated to Baseboard) 30
Mating Connectors 31
Mating Considerations 31
Modem Assembly Process and Diagram 31
Recommended PCB Footprint 33
Label Specification 34
Environmental Specifications 35

Design Considerations 35
Power Supply Input Pins 35
VCC 35
VCC_GPIO 36
Power Supply Design Guidelines 36
GND Pins 38
ENABLE Pin 38
nRESET Pin 39
Rebooting the Modem 39
Powering Off the Modem 40
Serial Communication 40
UART Specifications and Flow Control Implementation 41
UART0 42
UART1 43
Flow Control AT Command 44
Baud Rate AT Command 45
SIM Interfaces 46
External SIM Interface Pins 46
Swapping the Active SIM Interface 47
GPIO Pins 48
Terminating Unused GPIO Pins 50
SWD Pins 51
MAGPIO Pins 52
Debugging and Flashing the Modem 52
Overview 52

 © NimbeLink Corp. 2021. All rights reserved.

Downloaded from Arrow.com.

Serial DFU via UART0 (NL-SWN-LTE-NRF9160-B only) 53
Entering DFU Mode via Pin 10 (IO5) 53
SWD 53
Firmware Over The Air (FOTA) 53
Cellular Interface 54
Supported LTE Bands 54
Cellular Antenna Requirements 55
Recommended Cellular Antennas 55
GPS Interface 56
GPS Antenna Requirements 56
GPS Operation 57
GPS Antenna Placement Guidelines 58
Recommended GPS Antennas 59
Firmware Updates Over the Air (FOTA) 59
Skywire Reference Design 59
Design Review Service 60

Regulatory information 60
Cellular Certifications 60
Export Control Classification Number (ECCN) 60
Harmonized Tariff Schedule Code 60
RoHS Compliance 60
Interference Statement 60
FCC & IC Compliance 60
Wireless Notice 61
End-Product Labeling Requirements 62

Document Version Information 63

 © NimbeLink Corp. 2021. All rights reserved.

Downloaded from Arrow.com.

1. Introduction

1.1 Scope

This document serves as the hardware datasheet for the NL-SWN-LTE-NRF9160 Skywire® Nano modem family.

1.2 Contact Information

NimbeLink's goal is to make integrating Skywire modems into end-user applications as easy as possible. Please send any feedback, documentation requests, or technical support questions to NimbeLink's product support team at:

product.support@nimbelink.com

For purchasing information, please visit the "Part Ordering Information" section on the modem's product page:

https://nimbelink.com/products/4g-lte-m-global-nano/

Any additional sales questions or requests for quotation can be directed to NimbeLink's sales team at:

sales@nimbelink.com

1.3 Orderable Part Numbers

Orderable Device	Operating Temperature	4G LTE-M Bands	4G LTE NBIoT Bands
NL-SWN-LTE-NRF9160	-40˚C to +85˚C	B1, B2, B3, B4, B5, B8, B12, B13, B14, B17, B18, B19, B20, B25, B26, B28, B66	B1, B2, B3, B4, B5, B8, B12, B13, B17, B19, B20, B25, B26, B28, B66
NL-SWN-LTE-NRF9160-B			

1.4 Additional Resources

- Skywire Nano NL-SWN-LTE-NRF9160 Embedded Modem Product Page
- Skywire Nano NL-SWN-LTE-NRF9160 AT Command Manual
- Skywire Nano NL-SWN-LTE-NRF9160 Application Notes and Documentation
- Skywire Nano NL-SWN-LTE-NRF9160 Mechanical Model (STEP)
- NL-SWNDK User Manual
- NL-SWNDK Datasheet

 © NimbeLink Corp. 2021. All rights reserved.

Downloaded from Arrow.com.

2. Product Description

2.1 Device Information

The NL-SWN-LTE-NRF9160 Skywire Nano is an embedded cellular modem with an integrated Arm® Cortex®-M33 CPU that includes 256 KB of RAM and 1 MB of flash. The modem provides low-power LTE and GPS connectivity, and is compatible with most global LTE-M and NB-IoT cellular networks.

The Skywire Nano has many useful serial and analog peripherals integrated into the modem, including: UART, SPI, I²C, PWM and a 14-bit ADC with up to eight input channels. The modem offers 31 GPIO pins with support for flexible peripheral mapping, simplifying the development process for system designers.

The Skywire Nano operates in two modes: as a client to an external host MCU/Processor, or as a standalone device with code space available for users to embed their own applications.

If your product application stack runs on an external MCU or Processor, the Skywire Nano modem can act as a client and accept AT commands and provide responses over the serial UART.

Alternatively, you can develop application code and load it directly into the Skywire Nano and use the modem as the only processing device in your product. Please reference the online software development documentation for more details:

https://nimbelink.com/developer/

Featuring a 23 mm x 16.5 mm form factor, the Skywire Nano is an ideal solution for designers seeking ultra low-power LTE connectivity and a robust Arm® Cortex®-M33 CPU in a small, cost-effective package.

 © NimbeLink Corp. 2021. All rights reserved.

Downloaded from Arrow.com.

2.2 Feature Brief

Feature / Specification	Description
Application Processor	**CPU:** 64 MHz Arm® Cortex®-M33
Total RAM and Flash	**RAM:** 256 KB **Flash:** 1 MB
Customer-Accessible RAM and Flash	**RAM:** 64 KB **Flash:** 160 KB
Application Processor Peripherals	**Serial Peripherals:** 4 x SPI, 4 x UART, 4 x Two Wire Interface (TWI), I²C, I²S **Analog Peripherals:** PDM, PWM, 8/10/12-bit ADC with 8 input channels and 200 kHz sampling rate (up to 14-bit resolution when oversampling) **Timers:** 3 x Timers, 2 x RTC Watchdog Timers
I/O Pins	**GPIO:** 31 x VCC_GPIO ref'd with flexible peripheral mapping **MAGPIO:** 3 x 1.8V ref'd GPIO for antenna tuning
Internet Protocols	**Application Layer Protocols:** HTTP/HTTPS, TLS/DTLS, MQTT **Transport Layer Protocols:** TCP/UDP
Cellular Capabilities	**Cellular Technologies:** LTE-M, LTE CAT-NB1, and LTE CAT-NB2 **Internet Protocols:** IPv4, IPv6 **SMS:** PDU Mode **Low Power Modes:** PSM, eDRX **Operating Frequency Range:** 699 MHz to 1980 MHz **Cellular Operation Mode:** HD-FDD **RF Output Power:** -40 dBm to +23 dBm
LTE-M Specifications	**LTE-M Bands:** B1, B2, B3, B4, B5, B8, B12, B13, B14, B17, B18, B19, B20, B25, B26, B28, B66 **Low Band RX Sensitivity:** -108 dBm **Midband Rx Sensitivity:** -107 dBm **Uplink Speed:** 300 Kbps **Downlink Speed:** 375 Kbps

© NimbeLink Corp. 2021. All rights reserved.

Downloaded from Arrow.com.

Feature / Specification	Description
LTE CAT-NB1 and LTE CAT-NB2 Specifications	**LTE CAT-NB1 and LTE CAT-NB2 Bands:** B1, B2, B3, B4, B5, B8, B12, B13, B17, B19, B20, B25, B26, B28, B66 **RX Sensitivity:** -114 dBm **Uplink Speed:** 30 Kbps **Downlink Speed:** 60 Kbps
SIM Specification	**Soldered-Down SIM:** Verizon LTE-M MFF2 SIM integrated into the modem **External Sim Interface:** Support for an external SIM interface
Cellular Certifications	**Verizon ODI:** Complete **PTCRB:** Complete **AT&T:** In Progress **GCF:** In Progress
GPS Specifications	**GPS Band:** GPS L1 C/A **GPS Center Frequency:** 1575.42 MHz **Sensitivity, Cold Start:** -142 dBm **Sensitivity, Hot Start:** -145 dBm **Sensitivity, Tracking:** -151 dBm **Cold Start TTFF:** 40 seconds **Hot Start TTFF:** 1.5 seconds
Power Supply Inputs	**Supply Voltage (VCC):** 3.3V to 5.0V **Typical Value:** 3.8V or 5V **GPIO Reference Voltage (VCC_GPIO):** 1.8V to 3.6V **Typical Value:** 1.8V or 3.3V

© NimbeLink Corp. 2021. All rights reserved.

Downloaded from Arrow.com.

Feature / Specification	Description
Typical Power Consumption (VCC = 5V, VCC_GPIO = 3.3V)	**Socket Dial, Good Signal Strength:** Avg: 24 mA, Max: 46 mA **Socket Dial, Fair Signal Strength:** Avg: 25 mA, Max: 108 mA **Socket Dial, Poor Signal Strength:** Avg: 27 mA, Max: 344 mA **Registered Idle:** Average: 3.58 mA, Max: 36 mA **Unregistered Idle:** Average: 533 uA, Max: 7.5mA **Powered Off:** Average: 2.4 uA, Max: 71 uA **GPS:** Average: 43 mA, Max: 59 mA **PSM and eDRX:** *Coming Soon* **eDRX:** *Coming soon*
Physical Characteristics	**Dimensions (unmated):** 0.906" x 0.650" x 0.157" (23.00 mm x 16.5 mm x 4 mm) **Dimensions (mated):** 0.906" x 0.650" x 0.172" (23.00 mm x 16.50 mm x 4.36 mm) **Mass:** 2 grams (approx.)
Environmental Conditions	**Operating / Storage Temperature Range:** -40 ˚C to 85 ˚C **Humidity Range:** 20 %RH to 90 %RH

© NimbeLink Corp. 2021. All rights reserved.

Downloaded from Arrow.com.

2.3 Block Diagram

The figure below depicts the block diagram of the NL-SWN-LTE-NRF9160:

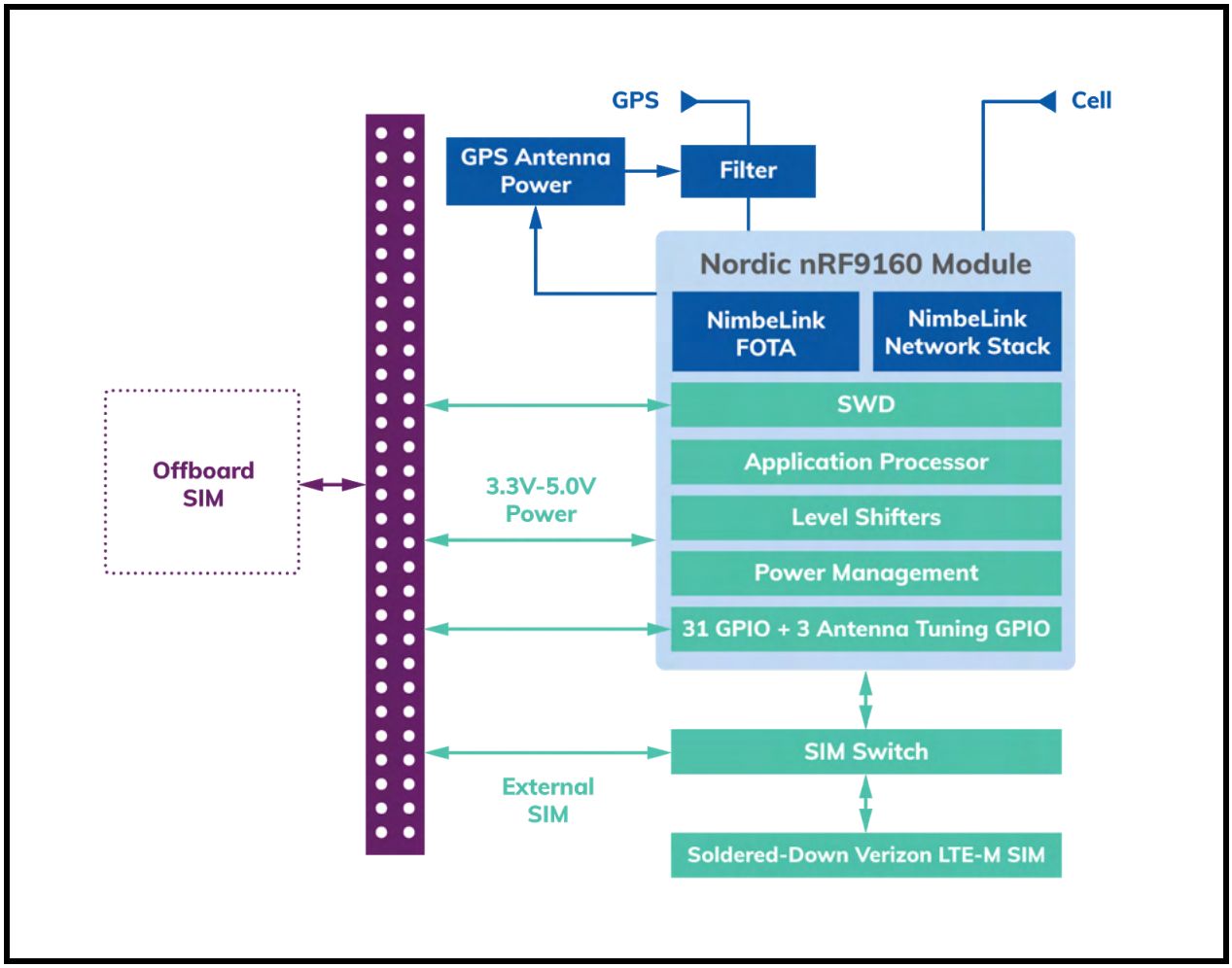

 © NimbeLink Corp. 2021. All rights reserved.

Downloaded from Arrow.com.

3. Modem Specifications

3.1 Device Connectors

3.1.1 60-pin Connector (J1)

The Skywire Nano interface utilizes a single 60-pin Molex connector to mate the modem to a baseboard. The female side of the mating connector pair is populated on the Skywire Nano (Molex P/N: 0547220604).

The male side of the mating connector pair (Molex P/N: 0555600607) is placed on the baseboard that interfaces with the modem. The male connector must be used by all system designers, and the pinout depicted below must be adhered to strictly and completely on all baseboards:

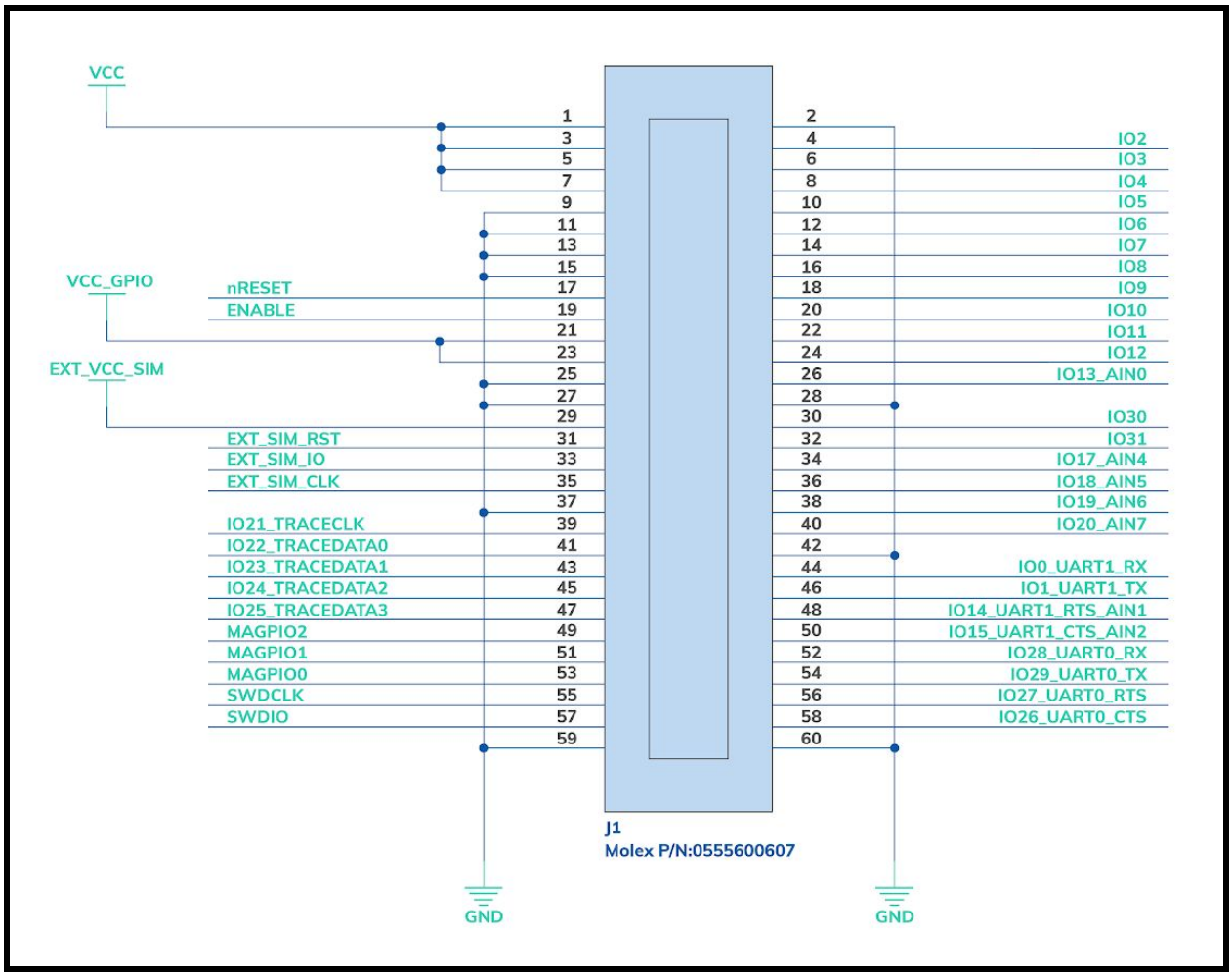

Note: *The above pinout diagram depicts a top-down view of connector J1, looking through the modem.*

© NimbeLink Corp. 2021. All rights reserved.

Downloaded from Arrow.com.

3.1.2 Pin Types

The table below contains a legend for the abbreviations used for the pin types throughout this datasheet:

Pin Type	Description
PI	Power Input
PO	Power Output
AI	Analog Input
DI	Digital Input
DO	Digital Output
IO	Digital Input/Output

3.1.3 Pinout for Main Modem Connector (J1)

Pin #	Pin Name	Type	Pin Description	If Not Used
1	VCC	PI	Main Power Supply Input Pin	Must be implemented.
2	GND	PI	Ground Input Pin	Must be implemented.
3	VCC	PI	Main Power Supply Input Pin	Must be implemented.
4	IO2	IO	Digital I/O Pin #2	No connect, see Section 4.9.1 regarding terminating unused GPIO.
5	VCC	PI	Main Power Supply Input Pin	Must be implemented.
6	IO3	IO	Digital I/O Pin #3	No connect, see Section 4.9.1 regarding terminating unused GPIO.
7	VCC	PI	Main Power Supply Input Pin	Must be implemented.
8	IO4	IO	Digital I/O Pin #4	No connect, see Section 4.9.1 regarding terminating unused GPIO.
9	GND	PI	Ground Input Pin	Must be implemented
10	IO5	IO	Digital I/O Pin #5, reserved during boot to trigger DFU. See Section 4.12.2 for details.	Must be implemented.

© NimbeLink Corp. 2021. All rights reserved.

Downloaded from Arrow.com.

Pin #	Pin Name	Type	Pin Description	If Not Used
11	GND	PI	Ground Input Pin	Must be implemented.
12	IO6	IO	Digital I/O Pin #6	No connect, see Section 4.9.1 regarding terminating unused GPIO.
13	GND	PI	Ground Input Pin	Must be implemented.
14	IO7	IO	Digital IO Pin #7	No connect, see Section 4.9.1 regarding terminating unused GPIO.
15	GND	PI	Ground Input Pin	Must be implemented.
16	IO8	IO	Digital I/O Pin #8	No connect, see Section 4.9.1 regarding terminating unused GPIO.
17	nRESET	DI	Modem Reset Pin	Must be implemented.
18	IO9	IO	Digital I/O Pin #9	No connect, see Section 4.9.1 regarding terminating unused GPIO.
19	ENABLE	DI	Modem Enable Pin Tie to VCC to boot the modem. Can be pulled-up to VCC with a 10k resistor to enable auto power on whenever power is applied.	Must be implemented.
20	IO10	IO	Digital I/O Pin #10	No connect, see Section 4.9.1 regarding terminating unused GPIO.
21	VCC_GPIO	PI	GPIO Power Supply Input and Reference Voltage	Must be implemented.
22	IO11	IO	Digital I/O Pin #11	No connect, see Section 4.9.1 regarding terminating unused GPIO.
23	VCC_GPIO	PI	GPIO Power Supply Input and Reference Voltage	Must be implemented.
24	IO12	IO	Digital I/O Pin #12	No connect, see Section 4.9.1 regarding terminating unused GPIO.
25	GND	PI	Ground Input Pin	Must be implemented.

© NimbeLink Corp. 2021. All rights reserved.

Downloaded from Arrow.com.

Pin #	Pin Name	Type	Pin Description	If Not Used
26	IO13_AIN0	IO, AI	Digital I/O Pin #13 ***Note:*** *Analog input functionality is currently not supported*	No connect, see Section 4.9.1 regarding terminating unused GPIO.
27	GND	PI	Ground Input Pin	Must be implemented.
28	GND	PI	Ground Input Pin	Must be implemented.
29	EXT_VCC_SIM	PO	External SIM Interface VCC Output Pin, Fixed 1.8V	No connection.
30	IO30	IO	Digital I/O Pin #30	No connect, see Section 4.9.1 regarding terminating unused GPIO.
31	EXT_SIM_RST	DO	External SIM Interface Reset Pin, Fixed 1.8V	No connection.
32	IO31	IO	Digital I/O Pin #31	No connect, see Section 4.9.1 regarding terminating unused GPIO.
33	EXT_SIM_IO	IO	External SIM Interface I/O Pin, Fixed 1.8V	No connection.
34	IO17_AIN4	AI, IO	Digital IO Pin #17 ***Note:*** *Analog input functionality is currently not supported*	No connect, see Section 4.9.1 regarding terminating unused GPIO.
35	EXT_SIM_CLK	DO	External SIM Interface Clock Pin, Fixed 1.8V	No connection.
36	IO18_AIN5	AI, IO	Digital I/O Pin #18 ***Note:*** *Analog input functionality is currently not supported*	No connect, see Section 4.9.1 regarding terminating unused GPIO.
37	GND	PI	Ground Input Pin	Must be implemented.
38	IO19_AIN6	AI, IO	Digital /IO Pin #19 ***Note:*** *Analog input functionality is currently not supported*	No connect, see Section 4.9.1 regarding terminating unused GPIO.
39	IO21_TRACECLK	IO	Digital I/O Pin #21 ***Note:*** *Debug and Trace functionality is currently not supported*	No connect, see Section 4.9.1 regarding terminating unused GPIO.
40	IO20_AIN7	AI, IO	Digital I/O Pin #20 ***Note:*** *Analog input functionality is currently not supported*	No connect, see Section 4.9.1 regarding terminating unused GPIO.

© NimbeLink Corp. 2021. All rights reserved.

Downloaded from Arrow.com.

Pin #	Pin Name	Type	Pin Description	If Not Used
41	IO22_TRACEDATA0	IO	Digital I/O Pin #22 ***Note:*** *Debug and Trace functionality is currently not supported*	No connect, see Section 4.9.1 regarding terminating unused GPIO.
42	GND	PI	Ground Input Pin	Must be implemented.
43	IO23_TRACEDATA1	IO	Digital I/O Pin #23 ***Note:*** *Debug and Trace functionality is currently not supported*	No connect, see Section 4.9.1 regarding terminating unused GPIO.
44	IO0_UART1_RX	DI	UART1 RX Input Pin ***Note:*** *This pin is used by the UART1 peripheral, and currently cannot be repurposed as digital I/O*	Must be implemented.
45	IO24_TRACEDATA2	IO	Digital I/O Pin #24 ***Note:*** *Debug and Trace functionality is currently not supported*	No connect, see Section 4.9.1 regarding terminating unused GPIO.
46	IO1_UART1_TX	DO	UART1 TX Output Pin ***Note:*** *This pin is used by the UART1 interface, and currently cannot be repurposed as digital I/O*	Must be implemented.
47	IO25_TRACEDATA3	IO	Digital I/O Pin #25 ***Note:*** *Debug and Trace functionality is currently not supported*	No connect, see Section 4.9.1 regarding terminating unused GPIO.
48	IO14_UART1_RTS_AIN1	DO	UART1 RTS Output Pin Active-Low flow control output for UART1, strongly recommended to connect. ***Note:*** *This pin is used by the UART1 interface, and currently cannot be repurposed as an analog input or digital I/O pin*	Optionally connect to a test point or a non-populated debug header. Otherwise, leave unconnected.
49	MAGPIO2	DO	Antenna Tuning GPIO pin #2, Fixed 1.8V	No connect, see Section 4.9.1 regarding terminating unused GPIO.

© NimbeLink Corp. 2021. All rights reserved.

Downloaded from Arrow.com.

Pin #	Pin Name	Type	Pin Description	If Not Used
50	IO15_UART1_CTS_AIN2	DI	UART1 CTS Input Pin Active-Low flow control input for UART1, strongly recommended to connect. ***Note:*** *This pin is used by the UART1 interface, and currently cannot be repurposed as an analog input or digital I/O pin*	Tie to GND with a pull down resistor. Optionally connect to a test point or a non-populated debug header.
51	MAGPIO1	DO	Antenna Tuning GPIO pin #1, Fixed 1.8V	No connect, see Section 4.9.1 regarding terminating unused GPIO.
52	IO28_UART0_RX	DI	UART0 RX Input Pin Strongly recommended to connect. ***Note:*** *This pin is used by the UART0 interface, and currently cannot be repurposed as digital I/O.*	Optionally connect to a test point or a non-populated debug header. Otherwise, leave unconnected.
53	MAGPIO0	DO	Antenna Tuning GPIO pin #0, Fixed 1.8V	No connect, see Section 4.9.1 regarding terminating unused GPIO.
54	IO29_UART0_TX	DO	UART0 TX Output Pin Strongly recommended to connect. ***Note:*** *This pin is used by the UART0 interface, and currently cannot be repurposed as digital I/O*	Optionally connect to a test point or a non-populated debug header. Otherwise, leave unconnected.
55	SWDCLK	DI	SWD interface clock signal Internally pulled-down.	Strongly recommended to connect to a debug header. Otherwise connect to a test point or a no-pop header.

 © NimbeLink Corp. 2021. All rights reserved.

Downloaded from Arrow.com.

Pin #	Pin Name	Type	Pin Description	If Not Used
56	IO27_UART0_RTS	DO	UART0 RTS Output Pin Active-Low flow control output for UART0, strongly recommended to connect. ***Note:*** *This pin is used by the UART0 interface, and currently cannot be repurposed as an analog input or digital I/O pin*	Optionally connect to a test point or a non-populated debug header. Otherwise, leave unconnected.
57	SWDIO	IO	SWD interface bidirectional I/O signal Internally pulled-up.	Strongly recommended to connect to a debug header. Otherwise connect to a test point or a no-pop header.
58	IO26_UART0_CTS	DI	UART0 CTS Input Pin Active-Low flow control input for UART0, strongly recommended to connect. ***Note:*** *This pin is used by the UART0 interface, and currently cannot be repurposed as an analog input or digital I/O pin*	Tie to GND with a pull down resistor. Optionally connect to a test point or a non-populated debug header.
59	GND	PI	Ground Input Pin	Must be implemented
60	GND	PI	Ground Input Pin	Must be implemented

Note 1: *All GPIO pins (aside from those reserved for UART0 and UART1) are initialized as inputs upon modem boot-up.*

Note 2: *Pin IO5 is reserved during the modem's booting procedure and can be used to force the modem into DFU mode. This pin should not be driven during a normal boot-up of the modem. Please refer to Section 4.12.2 for more information.*

© NimbeLink Corp. 2021. All rights reserved.

Downloaded from Arrow.com.

3.1.4 U.FL Antenna Ports

The modem has two U.FL connectors, X1 and X3, that are used to connect to external antennas for the cellular interface, and the GPS interface, respectively.

Connector Designator	Description	Location
X1	Cellular Antenna Connection	Top Side
X3	GPS Antenna Connection	

The image below depicts the location of each of the above antenna ports on the Skywire Nano:

 © NimbeLink Corp. 2021. All rights reserved.

Downloaded from Arrow.com.

3.2 Electrical Specifications

Section 3.2 contains relevant electrical specifications for the modem and each pin on the 60-pin connector, J1.

3.2.1 Absolute Maximum and Minimum Ratings

To avoid potential damage to the modem, ensure that all voltages applied to the modem pins do not fall outside of the ranges specified by the maximum and minimum ratings:

Pin Type	Modem Pin(s)		Min. Rating	Max. Rating
Ground Input	GND			0V
Main Power Supply Input	VCC		-0.3V	5.5V
ENABLE Signal	ENABLE		-0.3V	VCC
GPIO Reference Voltage and Power Supply Input	VCC_GPIO		-0.3V	3.9V
nRESET Signal	nRESET		-0.3V	VCC_GPIO + 0.3V
1V8 Referenced Antenna Tuning Pins	MAGPIO2, MAGPIO1, MAGPIO0		-0.3V	1.9 V
VCC_GPIO Referenced I/O	All other input and I/O pins.	VCC_GPIO ≤ 3.6V	-0.3 V	VCC_GPIO + 0.3V
		VCC_GPIO > 3.6V	-0.3V	3.9V

3.2.2 On-Board Capacitance and Inductance

The table below contains the total inductance and capacitance of the Skywire Nano.

These parameters are determined by summing the values of all inductors and capacitors present on the modem.

Parameter	Value
Total Capacitance	135uF ± 20%
Total Inductance	33nH ± 20%

© NimbeLink Corp. 2021. All rights reserved.

Downloaded from Arrow.com.

3.2.3 Recommended Operating Conditions

3.2.3.1 Power Input Pins

The Skywire Nano has 12 ground pins, 4 VCC pins, and 2 VCC_GPIO pins that must be connected to the baseboard.

Pin #	Name	Type	Notes	Min.	Typ.	Max.
2, 9, 11, 13, 15, 25, 27, 28, 37, 42, 59, 60	GND	PI	Ground pins. Must be connected.		0V	
1, 3, 5, 7	VCC	PI	Main power supply pins. Must be connected. Modem brownout occurs at 2.0V.	3.3V	3.8V or 5.0V	5.0V
21, 23	VCC_GPIO	PI	GPIO power supply input and reference voltage. Must be connected.	1.8V	1.8V or 3.3V	3.6V

3.2.3.2 ENABLE and nRESET Pins

The Skywire Nano has an ENABLE pin and an nRESET pin that control the power-on and reset functionality of the modem. These pins must be connected to the baseboard.

Pin #	Name	Type	Notes	Min.	Typ.	Max.
17	nRESET	DI	Modem reset signal. Pulled-up to 2.2V internally. Must be implemented, and must be driven with an open-drain output.	**VIL:** 0V to 0.4V		
19	ENABLE	DI	Tie to VCC to boot the modem, can be pulled-up to VCC with a 10k resistor to enable auto power on whenever power is applied.	**VIL:** 0V to 0.4V	VCC	**VIH:** 1.2V to VCC

© NimbeLink Corp. 2021. All rights reserved.

Downloaded from Arrow.com.

3.2.3.3 External SIM Interface Pins

The Skywire Nano features a soldered-down Verizon SIM on the modem, as well as an external SIM interface. NimbeLink recommends connecting these pins to a SIM card slot or another soldered-down SIM on the baseboard, but it is not required.

Pin #	Name	Type	Notes	Min.	Typ.	Max.
29	EXT_VCC_SIM	PO	External SIM Supply Voltage Pin	1.65V	1.8V	1.95V
31	EXT_SIM_RST	DO	External SIM reset signal. 1.8V referenced.	**VOL:** 0V to 0.27V		**VOH:** 1.26V to 1.8V
33	EXT_SIM_IO	IO	External SIM interface IO signal. 1.8V referenced.	**VOL, VIL:** 0V to 0.27V		**VOH, VIH:** 1.26V to 1.8V
35	EXT_SIM_CLK	DO	External SIM clock output. 1.8V ref'd.	**VOL:** 0V to 0.27V		**VOH:** 1.26V to 1.8V

3.2.3.4 Antenna Tuning GPIO Pins

The Skywire Nano has three 1.8V referenced pins that can be used to drive external antenna tuning circuitry such as RF switches.

Pin #	Name	Type	Notes	Min.	Typ.	Max.
49	MAGPIO2	DO	Antenna tuning GPIO 2. Fixed 1.8V reference.	**VIL:** 0V to 0.54V **VOL:** 0V to 0.4V		**VIH:** 1.26V to 1.8V **VOH:** 1.7V to 1.9V
51	MAGPIO1	DO	Antenna tuning GPIO 1. Fixed 1.8V reference.			
53	MAGPIO0	DO	Antenna tuning GPIO 0. Fixed 1.8V reference.			

© NimbeLink Corp. 2021. All rights reserved.

Downloaded from Arrow.com.

3.2.3.5 SWD Interface Pins

The Skywire Nano has an SWD interface that is used to program and debug the integrated application processor. These pins must be connected to the baseboard.

Pin #	Name	Type	Notes	Min.	Typ.	Max.
55	SWDCLK	DI	SWD interface clock signal. Internally pulled-down. Recommended to connect to a debug header.	**VIL:** 0V to 0.3 * VCC_GPIO		**VIH:** 0.7 * VCC_GPIO to VCC_GPIO
57	SWDIO	IO	SWD I/O pin. Internally pulled-up. Recommended to connect to a debug header.	**VIL:** 0V to 0.3 * VCC_GPIO **VOL:** 0V to 0.4V		**VIH:** 0.7 * VCC_GPIO to VCC_GPIO **VOH:** VCC_GPIO - 0.4 V to VCC_GPIO

3.2.3.6 Digital I/O Pins

The Skywire Nano has 31 digital I/O pins with the following electrical specifications:

Pin #	Name	Type	Notes	Min.	Typ.	Max.
4, 6, 8, 10, 12, 14, 16, 18, 20, 22, 24, 26, 30, 32, 34, 36, 38, 39, 40, 41, 43, 44, 45, 46 47, 48, 50, 52, 54, 56, 58	IO0 - IO31 (except IO16)	IO	Digital I/O pins. Some pins may have alternate functions (i.e. UART pins)	**VIL:** 0V to 0.3 * VCC_GPIO **VOL:** 0V to 0.4V		**VIH:** 0.7 * VCC_GPIO to VCC_GPIO **VOH:** VCC_GPIO - 0.4 V to VCC_GPIO

Note: *IO16 is used as the SIM_SELECT signal, and is not brought out on connector J1.*

© NimbeLink Corp. 2021. All rights reserved.

Downloaded from Arrow.com.

3.2.4 Typical Power Consumption

Section 3.2.4 contains power consumption measurements that were captured for a Skywire Nano using an NL-SWNDK and an external power supply.

3.2.4.1 Power Testing Setup Information

The list below has additional information about the testing setup and relevant pins on the modem:

- **VCC_GPIO**
  - Tied to the 3.3V rail on the NL-SWNDK.
  - The current draw of these pins is not included in the data below.
- **ENABLE**
  - Pulled-up to VCC with a 10K resistor on the NL-SWNDK.
- **Serial Communication**
  - UART0 was not used during the power testing.
  - UART1 was used to send AT commands to the modem in order to conduct the testing.
- **GPIO Pins**
  - All GPIO pins not used for serial communication with the modem were set as inputs.
- **SIM Slot:**
  - The external SIM slot on the NL-SWNDK and a Verizon LTE-M SIM were used for the testing.
- **Attenuators:**
  - For certain tests, attenuators were attached to the main antenna connector, X1, to simulate environments with lower LTE signal quality.

 © NimbeLink Corp. 2021. All rights reserved.

Downloaded from Arrow.com.

3.2.4.2 Power Consumption, Nominal Voltage (VCC=5V)

Test	RSRP (dBm)	RSRQ (dB)	Average Current (mA)	Average Peak Current (mA)	Total Charge (µAh)	Measurement Notes
TCP/IP Socket Dial, 0dB Attn.	-88	-11	20.138	68.301	7.838	**Supply Voltage:** 5V **Number of Tests:** 3 **Average Duration:** 1.395 s **Notes:** Modem registered on the network prior to the test. Test consisted of opening socket, HTTP POST, reading HTTP response, and closing socket.
TCP/IP Socket Dial, 20dB Attn,	-108	-10.5	22.590	293.685	8.880	**Supply Voltage:** 5V **Number of Tests:** 3 **Average Duration:** 1.398 s **Notes:** Same as previous test.
TCP/IP Socket Dial, 40dB Attn.	-130	-11	54.244	429.559	64.032	**Supply Voltage:** 5V **Number of Tests:** 3 **Average Duration:** 4.246 s **Notes:** Same as previous test.
Power On, TCP/IP Socket Dial, Power Off, 0dB Attn.	-88	-11	15.54	70.410	28.85	**Supply Voltage:** 5V **Number of Tests:** 3 **Average Duration:** 6.6398 s **Notes:** Current consumption recorded for complete power on, network registration, socket dial, and power off.
Modem Boot	N/A	N/A	2.855	11.072	886.85 (nAh)	**Supply Voltage:** 5V **Number of Tests:** 5 **Average Duration:** 1.111 s **Notes:** Modem booted from powered-off state. Test concluded when "READY" URC was received from modem.
Network Registration	-88	-11	21.31	68.301	18.91	**Supply Voltage:** 5V **Number of Tests:** 5 **Average Duration:** 3.194 s **Notes:** Current consumption during modem network registration.

© NimbeLink Corp. 2021. All rights reserved.

Downloaded from Arrow.com.

Test	RSRQ (dBm)	RSRP (dBm)	Average Current (mA)	Average Peak Current (mA)	Total Charge (µAh)	Measurement Notes
Registered Idle	-85	-10	3.58	35.858	304.718	**Supply Voltage:** 5V **Number of Tests:** 1 **Duration:** 300 s **Notes:** Modem registered on network idling with AT+CFUN=1.
Unregistered Idle	N/A	N/A	532.8 (µA)	7.469	44.39	**Supply Voltage:** 5V **Number of Tests:** 1 **Duration:** 300 s **Notes:** Modem offline and idling with AT+CFUN=4.
PSM						***Coming Soon***
eDRx						***Coming Soon***
Powered Off	N/A	N/A	2.397 (µA)	71 (µA)	0.665 (µAh)	**Supply Voltage:** 5V **Number of Tests:** 1 **Duration:** 1000 s **Notes:** Modem powered off using AT#SHUTDOWN. ENABLE connected to VCC, and VCC_GPIO connected to 3.3V.
GPS Cold Start	N/A	N/A	43.225	59.229	480	**Supply Voltage:** 5V **Number of Tests:** 5 **Average TTFF:** 40 s **Notes:** Modem offline with AT+CFUN=4, measurement started, GPS turned on and polled until location fix.
GPS Hot Start	N/A	N/A	43.096	59.968	18	**Supply Voltage:** 5V **Number of Tests:** 5 **Average Duration:** 1.5 s **Notes:** Modem offline with AT+CFUN=4, GPS turned on and allowed to obtain a GPS fix. Measurement started, location data queried with AT command, measurement stopped when modem responded with GPS data.

© NimbeLink Corp. 2021. All rights reserved.

Downloaded from Arrow.com.

3.2.4.3 Power Consumption, VCC=3.8V

Test	RSRP (dBm)	RSRQ (dB)	Average Current (mA)	Average Peak Current (mA)	Total Charge (µAh)	Measurement Notes
TCP/IP Socket Dial, 0dB Attn.	-88	-11	23.902	95.117	9.319	**Supply Voltage:** 3.8V **Number of Tests:** 3 **Average Duration:** 1.395 s **Notes:** Modem registered on the network prior to the test. Test consisted of opening socket, HTTP POST, reading HTTP response, and closing socket.
TCP/IP Socket Dial, 20dB Attn,	-108	-10.5	25.089	234.083	12.060	**Supply Voltage:** 3.8V **Number of Tests:** 3 **Average Duration:** 1.691 s **Notes:** Same as previous test.
TCP/IP Socket Dial, 40dB Attn.	-130	-11	60.972	329.051	102.985	**Supply Voltage:** 3.8V **Number of Tests:** 3 **Average Duration:** 5.688 s **Notes:** Same as previous test.
Power On, TCP/IP Socket Dial, Power Off, 0dB Attn.	-88	-11	18.82	92.403	36.30	**Supply Voltage:** 3.8V **Number of Tests:** 3 **Average Duration:** 6.9429 s **Notes:** Current consumption recorded for complete power on, network registration, socket dial, and power off.
Modem Boot	N/A	N/A	4.314	14.027	1.006	**Supply Voltage:** 3.8V **Number of Tests:** 5 **Average Duration:** s **Notes:** Modem booted from powered-off state. Test concluded when "READY" URC was received from modem.
Network Registration	-88	-11	27.12mA	95.117	29.90	**Supply Voltage:** 3.8V **Number of Tests:** 5 **Average Duration:** 3.704 s **Notes:** Current consumption during modem network registration.

 © NimbeLink Corp. 2021. All rights reserved.

Downloaded from Arrow.com.

Test	RSRQ (dBm)	RSRP (dBm)	Average Current (mA)	Average Peak Current (mA)	Total Charge (µAh)	Measurement Notes
Registered Idle	-85	-10	8.384	319.810	704.817	**Supply Voltage:** 3.8V **Number of Tests:** 1 **Duration:** 300 s **Notes:** Modem registered on network idling with AT+CFUN=1.
Unregistered Idle	N/A	N/A	611 uA	619 uA	50.834 uAh	**Supply Voltage:** 3.8V **Number of Tests:** 1 **Duration:** 300 s **Notes:** Modem offline and idling with AT+CFUN=4.
PSM						***Coming Soon***
eDRx						***Coming Soon***
Powered Off	N/A	N/A	2.883 (µA)	82 (µA)	800 (nAh)	**Supply Voltage:** 3.8V **Number of Tests:** 1 **Duration:** 1000 s **Notes:** Modem powered off using AT#SHUTDOWN. ENABLE connected to VCC, and VCC_GPIO connected to 3.3V.
GPS Cold Start	N/A	N/A	50.505	71.841	561.116	**Supply Voltage:** 3.8V **Number of Tests:** 5 **Average TTFF:** 40 s **Notes:** Modem offline with AT+CFUN=4, measurement started, GPS turned on and polled until location fix.
GPS Hot Start	N/A	N/A	50.220	70.876	20.925	**Supply Voltage:** 3.8V **Number of Tests:** 5 **Average Duration:** s **Notes:** Modem offline with AT+CFUN=4, GPS turned on and allowed to obtain a GPS fix. Measurement started, location data queried with AT command, measurement stopped when modem responded with GPS data.

© NimbeLink Corp. 2021. All rights reserved.

Downloaded from Arrow.com.

3.3 Cellular and GPS Specifications

3.3.1 Available Technologies and Bands

Cellular Technology	Bands
LTE CAT-M1	B1, B2, B3, B4, B5, B8, B12, B13, B14, B17, B18, B19, B20, B25, B26, B28, B66
LTE CAT-NB1, LTE CAT-NB2	B1, B2, B3, B4, B5, B8, B12, B13, B17, B19, B20, B25, B26, B28, B66
GPS	L1 C/A (1575.42 MHz)

3.3.2 LTE CAT-M1 Specifications

Parameter	Description	Min.	Typ.	Max.
Operating Frequency	Modem operating frequency range.	699 MHz		1980 MHz
Output Power	RF output power.	-40 dBm	23 dBm	23 dBm
Output Power Accuracy	Accuracy of reported output power.			±2 dBm
Low Band RX Sensitivity	CAT-M1 RX sensitivity at low band.		-108 dBm	
Midband Rx Sensitivity	CAT-M1 RX sensitivity at midband.		-107 dBm	
Uplink Speed	CAT-M1 upload speed.			300 Kbps
Downlink Speed	CAT-M1 download speed.			375 Kbps

3.3.3 LTE CAT-NB1 and LTE CAT-NB2 Specifications

Parameter	Description	Min.	Typ.	Max.
Operating Frequency	Modem operating frequency range.	699 MHz		1980 MHz
Output Power	RF output power.	-40 dBm	23 dBm	23 dBm
Output Power Accuracy	Accuracy of reported output power.			±2 dBm
RX Sensitivity	CAT-NB1 / CAT-NB2 RX sensitivity.		-114 dBm	
Uplink Speed	CAT-M1 upload speed.			30 Kbps
Downlink Speed	CAT-M1 download speed.			60 Kbps

© NimbeLink Corp. 2021. All rights reserved.

Downloaded from Arrow.com.

3.3.4 GPS Specifications

Parameter	Description	Min.	Typ.	Max.
Operating Frequency	GPS L1 C/A center frequency.		1575.42 MHz	
Sensitivity, Cold Start	RX sensitivity for cold start.		-147 dBm	
Sensitivity, Hot Start	RX sensitivity for hot start.		-147 dBm	
Sensitivity, Tracking	RX sensitivity while tracking.		-155 dBm	
TTFF, cold	Cold start, clear LOS to sky, typical conditions		43 s	
TTFF, hot	Hot start, clear LOS to sky, typical conditions		1.5 s	
Periodic Accuracy	Periodic tracking position accuracy		5 m	
Continuous Accuracy	Continuous tracking position accuracy		3 m	

Note: *Sensitivity and accuracy values are taken from the module manufacturer's product specification for the NRF9160 cellular module. TTFF specs assume ideal GPS conditions.*

3.4 Mechanical Specifications

3.4.1 Modem Mechanical Characteristics

Parameter	Description	Min.	Typ.	Max.
Dimensions, Unmated	Modem dimensions, connector J1 not mated with baseboard.	0.906" x 0.650" x 0.157" 23.00 mm x 16.500 mm x 4.00 mm		
Dimensions, Mated	Modem dimensions, connector J1 mated to baseboard.	0.906" x 0.650" x0 .181" 23.00 mm x 16.50 mm x 4.6 mm		
Mass	Mass of the modem in grams.		2 grams	
J1 Insertions/Removals	Number of mating cycles until possible connector failure.		10	
X1/X3 Insertion/Removals	Number of mating cycles until possible connector failure.	30	hundreds	

© NimbeLink Corp. 2021. All rights reserved.

Downloaded from Arrow.com.

3.4.2 Mechanical Drawing (Modem Unmated)

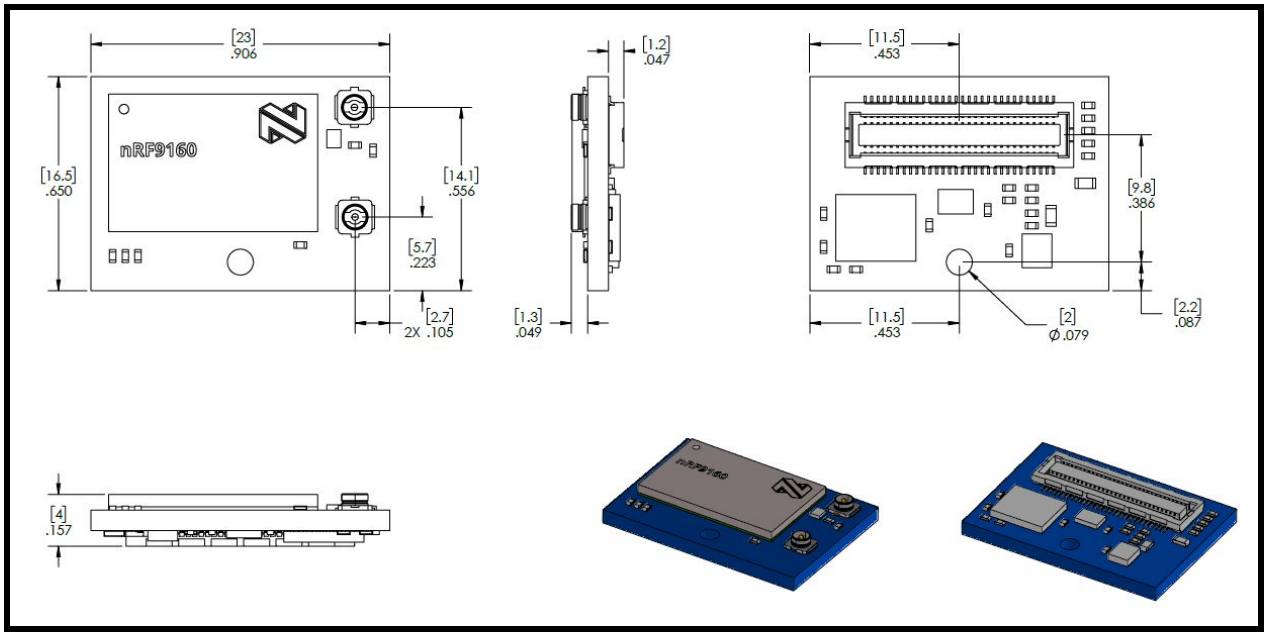

Note: *Dimensions are inches and [mm].*

3.4.3 Mechanical Drawing (Modem Mated to Baseboard)

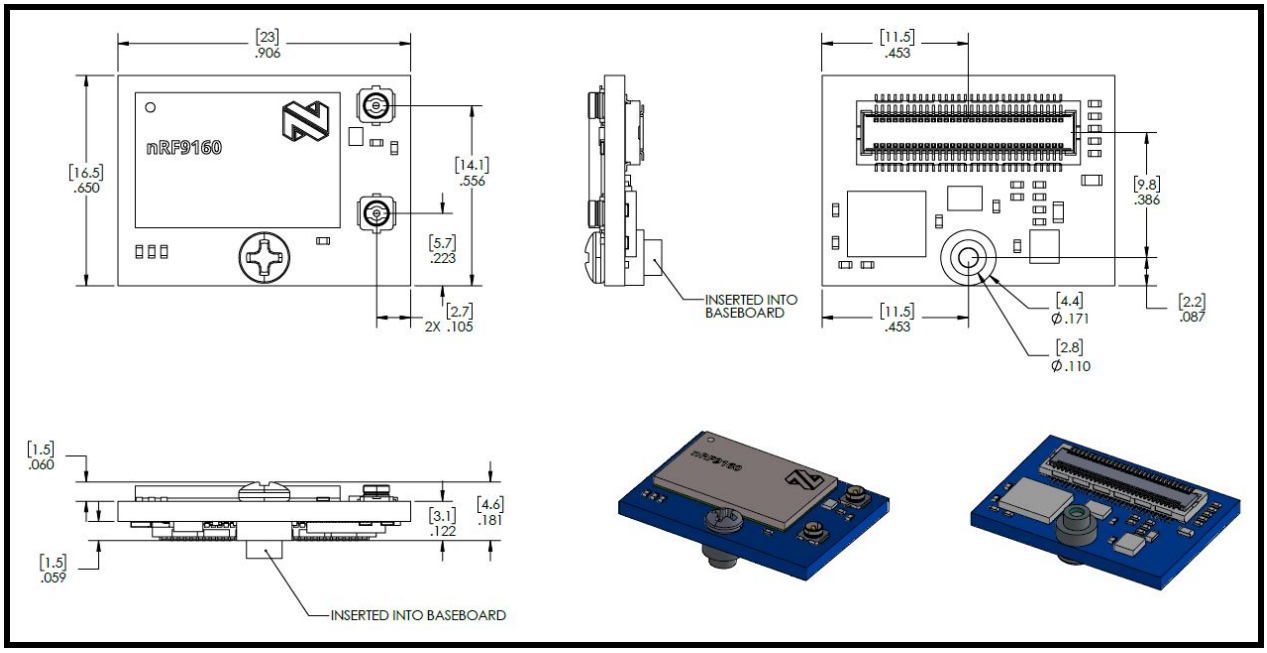

Note: *Dimensions are inches and [mm].*

 © NimbeLink Corp. 2021. All rights reserved.

Downloaded from Arrow.com.

3.4.4 Mating Connectors

The table below contains each connector on the modem as well as a recommended mating connector:

Connector Designator	Populated on Modem	Manufacturer	Recommended Mate	Manufacturer
J1	0547220604	Molex	555600607*	Molex
X1, X3	U.FL-R-SMT-1(10)	Hirose	CAB.011	Taoglas

**The use of a Molex 555600607 as the mating connector is strictly required for the Skywire Nano.*

3.4.5 Mating Considerations

The use of a spacer and a mounting screw is required in order to provide mechanical stability and retention to the modem when it is attached to a baseboard. The spacer must be soldered to the baseboard, and does not ship with the modem.

Description	Manufacturer	Manufacturer P/N	Notes
M2 Threaded Steel Spacer, 1.5mm length	Würth Elektronik	9774015243	The exact spacer P/N must be used to ensure proper mating.
M2 Hex Screw, 4mm length	McMaster-Carr	91292A004	These part numbers are recommended mounting screws. Equivalent alternatives may also be acceptable.
M2 Phillips Screw, 4mm length	McMaster-Carr	92005A016	

3.4.6 Modem Assembly Process and Diagram

To attach the modem to a baseboard, the round spacer should first be soldered into the baseboard. Next mate the modem with the baseboard connector. Ensure that the two connectors are parallel with each other before applying insertion force.

After the modem is properly seated in the baseboard connector, drive a mounting screw through the top side of the modem and into the baseboard spacer. The screw should be hand-tightened. Do not overtighten the mounting screw.

© NimbeLink Corp. 2021. All rights reserved.

Downloaded from Arrow.com.

The image below depicts the assembly diagram for the Skywire Nano:

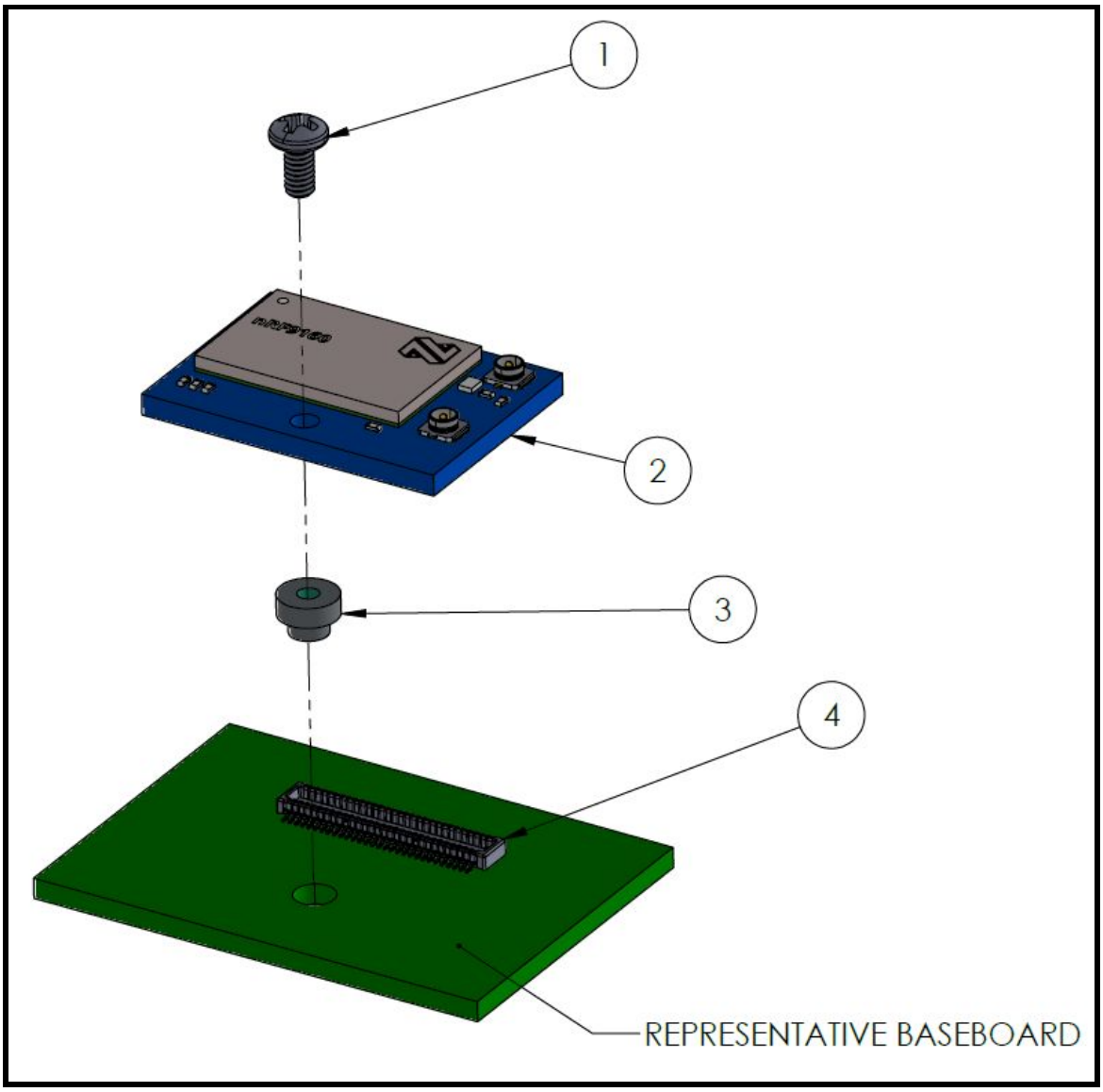

Item #	Description	Manufacturer	Manufacturer P/N
1	M2 Hex Screw, 4mm length	McMaster-Carr	91292A004
2	Skywire Nano Modem	NimbeLink	NL-SWN-LTE-NRF9160
3	M2 Threaded Steel Spacer, 1.5mm length	Würth Elektronik	9774015243
4	60-pin connector, 0.5mm pitch	Molex	555600607

 © NimbeLink Corp. 2021. All rights reserved.

Downloaded from Arrow.com.

3.5 Recommended PCB Footprint

The image below depicts the recommended footprint for the Skywire Nano. Dimensions are in inches and [millimeters].

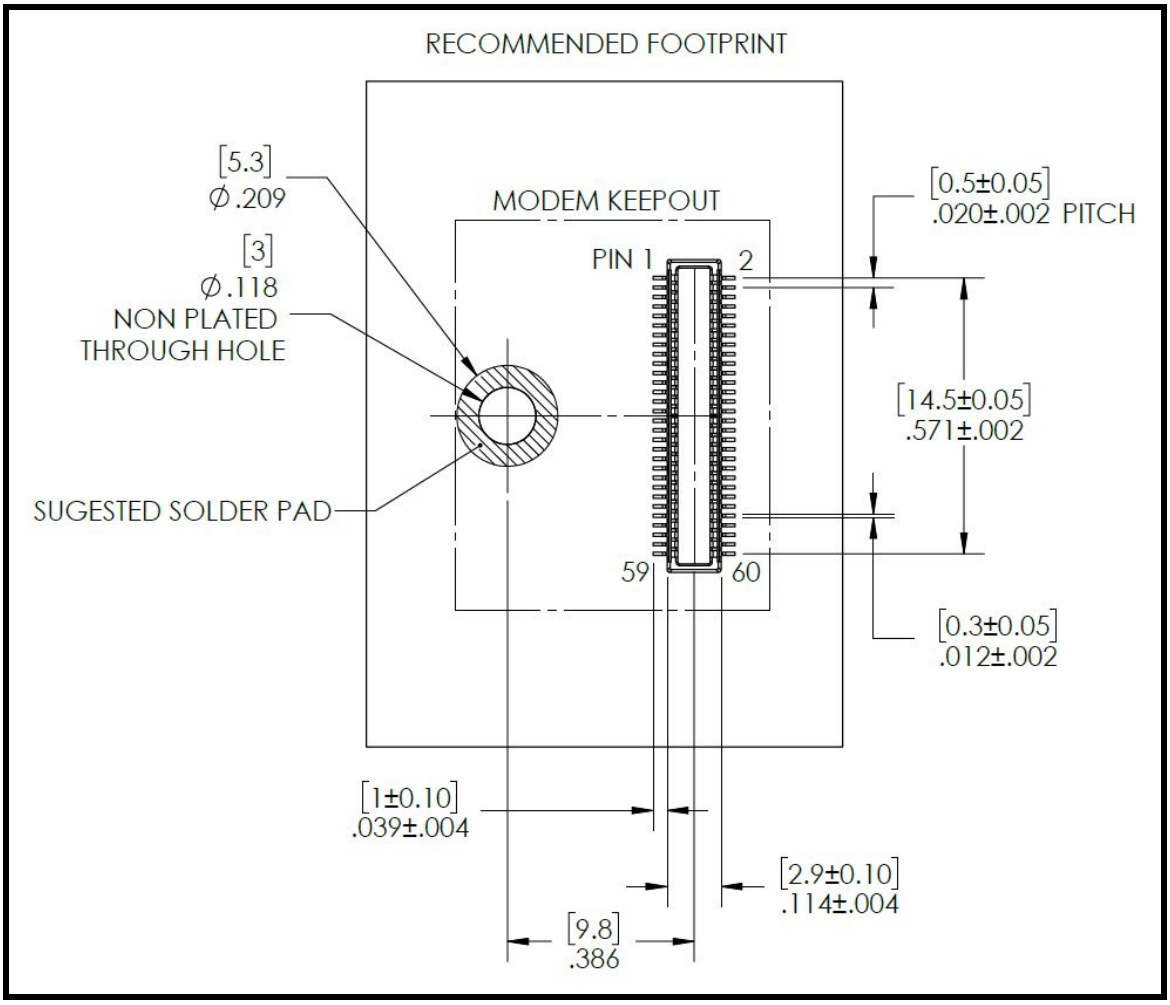

Note: *In order to avoid unwanted shorts between components on the modem and components on the baseboard, do not place any components underneath the modem.*

An Altium 19 schematic symbol and footprint for the modem is available with the NL-SWNDK design files:

https://nimbelink.com/Documentation/Development_Kits/NL-SWNDK/1002333_REVB_NL-SWNDK_Design_Files.zip

A 3D STEP model of the modem is available here:

https://nimbelink.com/Documentation/Skywire/Nano/4G_LTE_Cat_M1_Nordic/1002264_NL-SWN-LTE-NRF9160_3DMODEL.zip

 © NimbeLink Corp. 2021. All rights reserved.

Downloaded from Arrow.com.

3.6 Label Specification

The Skywire Nano has a label that contains the modem's model number, FCC ID, IC ID and unique device information encoded in a 2-D barcode:

Item	Dimensions	Description
Skywire Nano Label	0.6" x 0.37"	Kimdura Polypropylene Thermal Transfer Label, Matte White, 0.0312” Radius Corners
2-D Barcode	0.5" x 0.16"	2-D data matrix with ECC 200 error correction, Encoding length of 62 characters

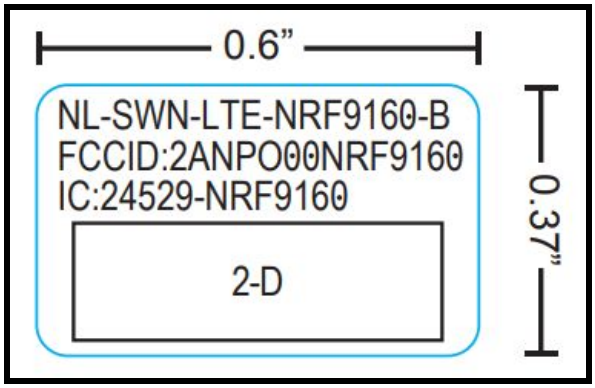

The barcode stores unique modem information in the following format:

IMEI,SerialNumber,ICCID,PartNumber

Example: 352656012345678,z02023987654321,89148012345678901234,1002551A

Parameter	Description	Length	Example
IMEI	International Mobile Equipment Identity (IMEI)	15 digits	012345678901234
SerialNumber	NimbeLink serial number and manufacturing information	1 letter + 14 digits	z02023987654321
ICCID	Integrated Circuit Card Identifier (ICCID) of the modem's soldered-down Verizon SIM	20 digits	89148012345678901234
PartNumber	NimbeLink part number and revision	7 digits + 1 letter	1002551A

© NimbeLink Corp. 2021. All rights reserved.

Downloaded from Arrow.com.

3.7 Environmental Specifications

Parameter	Min.	Typ.	Max.
Operating Temperature	-40 ˚C	25 ˚C	85 ˚C
Storage Temperature	-40 ˚C	25 ˚C	85 ˚C
Operating Humidity, Non-Condensing	20 %RH		90 %RH

4. Design Considerations

The following sections contain design requirements and considerations that must be addressed and followed when integrating a Skywire Nano into a customer design.

4.1 Power Supply Input Pins

4.1.1 VCC

The Skywire Nano has four VCC pins that serve as the main power supply input pins:

Pin #	Pin Name	Type	Pin Description	If Not Used
1, 3, 5, 7	VCC	PI	Main Power Supply Input Pins	Must be implemented

NL-SWN-LTE-NRF9160 modems have an operating voltage range of 3.3V to 5.0V, with a recommended input voltage of 3.8V or 5.0V. Extreme care must be taken to ensure that the modem's power supply stays within the operating voltage range. If there is a voltage drop or overshoot that exceeds the limits of the operating voltage range, it may cause damage to the modem and void the modem’s warranty.

Parameter	Value
Absolute Maximum Voltage Range	-0.3V to 5.5V
Operating Voltage Range	3.3V to 5.0V
Nominal Supply Voltage	3.8V or 5.0V

NL-SWN-LTE-NRF9160 modems will regularly consume high amounts of current on their VCC input pins - up to 500mA during LTE-M1 transmits and receives.

The chosen power supply must be able to meet the transient current spikes characteristic of LTE modem operation without excessive drooping of the VCC rail.

© NimbeLink Corp. 2021. All rights reserved.

Downloaded from Arrow.com.

To assist with sudden changes in instantaneous current draw, a 100 nF and 22 µF low-ESR ceramic capacitor should be placed on the baseboard near the VCC pins in order to provide a local energy source with a low inductance path to the VCC pins.

4.1.2 VCC_GPIO

The Skywire Nano has two VCC_GPIO pins that serve as the GPIO reference voltage and GPIO power supply input pins:

Pin #	Pin Name	Type	Pin Description	If Not Used
21, 23	VCC_GPIO	PI	GPIO power supply input and reference voltage.	Must be implemented

Each GPIO pin on the Skywire Nano is capable of sourcing or sinking up to 4 mA.

The chosen power supply for the VCC_GPIO pins must be capable of sourcing enough current to meet the needs of the end-user's unique implementation of the GPIO pins.

4.1.3 Power Supply Design Guidelines

The guidelines listed below should be followed when designing the power supplies for the VCC and VCC GPIO pins of the Skywire Nano:

- Standard 5V, 500mA USB bus power can be used to supply power to the Skywire Nano and any accompanying circuitry.
    - However, it is essential to ensure that the output current limit of the USB supply voltage is not exceeded. Failure to do so may subject the modem to excessive drooping on the VCC rail and/or brownout conditions.
- The Skywire Nano can also be powered by a switching regulator, or an LDO with a fast transient response.
    - When using an LDO, it is essential to choose one that has a fast current transient response (around 1A/µs) to prevent brownouts.
        - The following is an example of a suitable LDO for use with the Skywire Nano: https://www.ti.com/product/TPS7A7200
    - When using a switching regulator, it is essential to follow design guidelines from the IC manufacturer to reduce potential EMI problems.
- If a battery is being used to supply power to the modem and accompanying circuitry, it is recommended to utilize a battery management IC or fuel gauge in order to monitor the State of Charge (SoC) of the battery.

 © NimbeLink Corp. 2021. All rights reserved.

Downloaded from Arrow.com.

    - Close monitoring of the battery voltage is essential to ensure that the modem is not driven at an inadequate voltage. When the battery is too low, the application should stop using the modem to prevent accidental brown out conditions during modem use.

- Low ESR ceramic decoupling capacitors with adequate capacity must be placed near the VCC inputs (pins 1, 3, 5, 7) of the Skywire Nano.
    - It is recommended that the capacitors have a rated voltage of at least 2x the input voltage to the Skywire Nano.
    - The 100 nF capacitor should be placed as close as possible to the VCC pins of the Skywire modem, followed by the 22 µF capacitor.
- Applications that utilize the Skywire Nano's GPIO pins to source significant amounts of current should consider adding ceramic decoupling capacitors with adequate capacity as close as possible to the VCC_GPIO pins.
- Do not place any components underneath the modem. This may cause unwanted shorts between components on the modem and components underneath.
- Ensure that there is a low inductance power path between the modem's VCC and VCC_GPIO input pins and the power supply.
    - A minimum trace width of 80 mils for the VCC power path, and 30 mils for the VCC_GPIO power path are recommended. Polygon pours or copper regions are preferable to standard PCB traces for power delivery.
    - The power traces/pours should be made as short and wide as possible to reduce the effect of parasitic inductance in the power path.
- The baseboard should implement a way to disconnect VCC and VCC_GPIO from their power supplies and ground the ENABLE signal in order to facilitate the lowest possible current consumption when the modem is in the shutdown state.
    - This can be accomplished by placing a load switch in the power path or by toggling the enable signals on power IC's, for instance.
- A dedicated ground plane on the baseboard is strongly suggested to ensure the highest possible signal integrity.
- Power cables should be isolated from noise-sensitive devices such as antennas, and from high speed signals like USB or data/clock lines.
- Refer to the NL-SWNDK design for an example of an ideal power supply layout:

  https://nimbelink.com/Documentation/Development_Kits/NL-SWNDK/1002333_REVB_NL-SWNDK_Design_Files.zip

 © NimbeLink Corp. 2021. All rights reserved.

Downloaded from Arrow.com.

4.2 GND Pins

The Skywire Nano has twelve GND pins that must be connected:

Pin #	Pin Name	Type	Pin Description	If Not Used
2, 9, 11, 13, 15, 25, 27, 28, 37, 42, 59, 60	GND	PI	Ground pins. Must be connected.	Must be implemented

Each GND pin on the modem must be strongly attached to the system ground with a low impedance connection. Thermal reliefs for the GND pins are not recommended. A dedicated GND plane on the baseboard is also recommended in order to ensure a robust GND connection for the modem and accompanying circuitry.

4.3 ENABLE Pin

The Skywire Nano has an enable pin that is used to power on the modem:

Pin #	Pin Name	Type	Pin Description	If Not Used
19	ENABLE	DI	Modem Enable Pin	Must be implemented. Tie to VCC to boot the modem.

The ENABLE pin on the Skywire Nano must be driven above 1.2V in order to boot the modem. This can be accomplished in several ways, namely:

- Pulling the ENABLE signal up to VCC with a resistor (10kΩ recommended)
- Driving the ENABLE pin to a voltage in the logic high range (1.2V to VCC) with external circuitry and/or an output pin from the host controller

If the ENABLE signal is pulled-up to VCC with a resistor, the modem will automatically boot as soon as a voltage is applied to the VCC pins.

In order to facilitate the lowest current consumption possible, the baseboard must implement a way to ground the ENABLE signal and remove VCC and VCC_GPIO when the modem is in the powered off state.

As mentioned in Section 4.1.3, this can be achieved by placing a load switch in the VCC/VCC_GPIO power path, or by toggling the enable signal on the power IC, etc.

 © NimbeLink Corp. 2021. All rights reserved.

Downloaded from Arrow.com.

4.4 nRESET Pin

The Skywire Nano has an active-low input signal that can be used to reset the modem:

Pin #	Pin Name	Type	Pin Description	If Not Used
17	nRESET	DI	Modem Reset Pin	Must be implemented

In the event that the modem becomes unresponsive, the nRESET pin can be grounded to unconditionally shut down and reboot the modem. However, the modem will not detach from the network before resetting.

Cellular network providers request that mobile equipment gracefully detach from the network before shutting down. Since the reset functionality violates this request, it should only be used as a last resort when the modem is not responding to AT commands.

The nRESET pin is pulled-up to 2.2V internally on the nRF9160 cellular module, and must only be driven with an open-drain output on the baseboard.

Note: Never apply a non-zero voltage to this pin under any circumstances. Doing so may irreversibly damage the Skywire modem.

To unconditionally shut down the modem with the nRESET signal, tie the pin low for at least 100 ms, and then release.

In high noise (high EMI) environments, it is recommended to place a 100nF capacitor between the nRESET signal and GND near the J1 connector.

4.5 Rebooting the Modem

The Skywire Nano can be rebooted with the AT#REBOOT command:

Set Command Syntax:

AT#REBOOT
OK
+RESET

The reboot command will cause the Skywire Nano to cease all ongoing network operations, gracefully detach from the network, power off and finally power back on.

The AT#REBOOT command should be used in place of the nRESET signal whenever possible, since it allows the modem to gracefully detach from the network before the reboot, as opposed to abruptly resetting the modem with the nRESET signal.

 © NimbeLink Corp. 2021. All rights reserved.

Downloaded from Arrow.com.

4.6 Powering Off the Modem

The Skywire Nano can be powered off and placed into a quiescent low power state with AT#SHUTDOWN. The shutdown will take less than one second to complete:

Set Command Syntax:

AT#SHUTDOWN
OK
+SHUTDOWN

In order to achieve the lowest power state possible, the baseboard must take the following actions:

- Shut down the modem with the AT#SHUTDOWN command.
- Wait at least 1 second for the shutdown to complete.
- Remove VCC and VCC_GPIO from the corresponding pins on J1, and ground the ENABLE signal.

It is strongly recommended to precisely follow the above steps when powering off the modem. This will allow for the lowest quiescent power consumption for the modem.

However, if hardware limitations prevent the removal of VCC and VCC_GPIO and the grounding of the ENABLE pin, the shutdown state can still reduce the quiescent current of the Skywire Nano to around 2.4 uA at 5V or 2.9 uA at 3.8V.

4.7 Serial Communication

The Skywire Nano has two UART interfaces, UART0 and UART1:

- **UART0**
    - Transmit-only serial port used by the modem to output debugging information and kernel messages. Also used to perform Device Firmware Upgrades (DFU) over serial on NL-SWN-LTE-NRF9160-B modems.
    - Strongly recommended to implement UART0, but not explicitly required. Connect to test points or a NP header if unused.
- **UART1**
    - Primary serial port for interfacing with the modem's AT command parser.
    - UART1 must be implemented.

 © NimbeLink Corp. 2021. All rights reserved.

Downloaded from Arrow.com.

4.7.1 UART Specifications and Flow Control Implementation

The serial ports default to 115200 baud 8N1, with support for up to 1M baud. The use of hardware flow control (RTS/CTS) is supported and encouraged.

Parameter	Value
Default Baud Rate	115200 bps
Minimum Baud Rate	300 bps
Maximum Baud Rate	1 Mbps
Data Bits	8
Parity Bit	N
Stop Bit(s)	1

The diagram below depicts the relevant UART signals and their directions. The proper way to connect the Skywire Nano's UART's to another device is also shown:

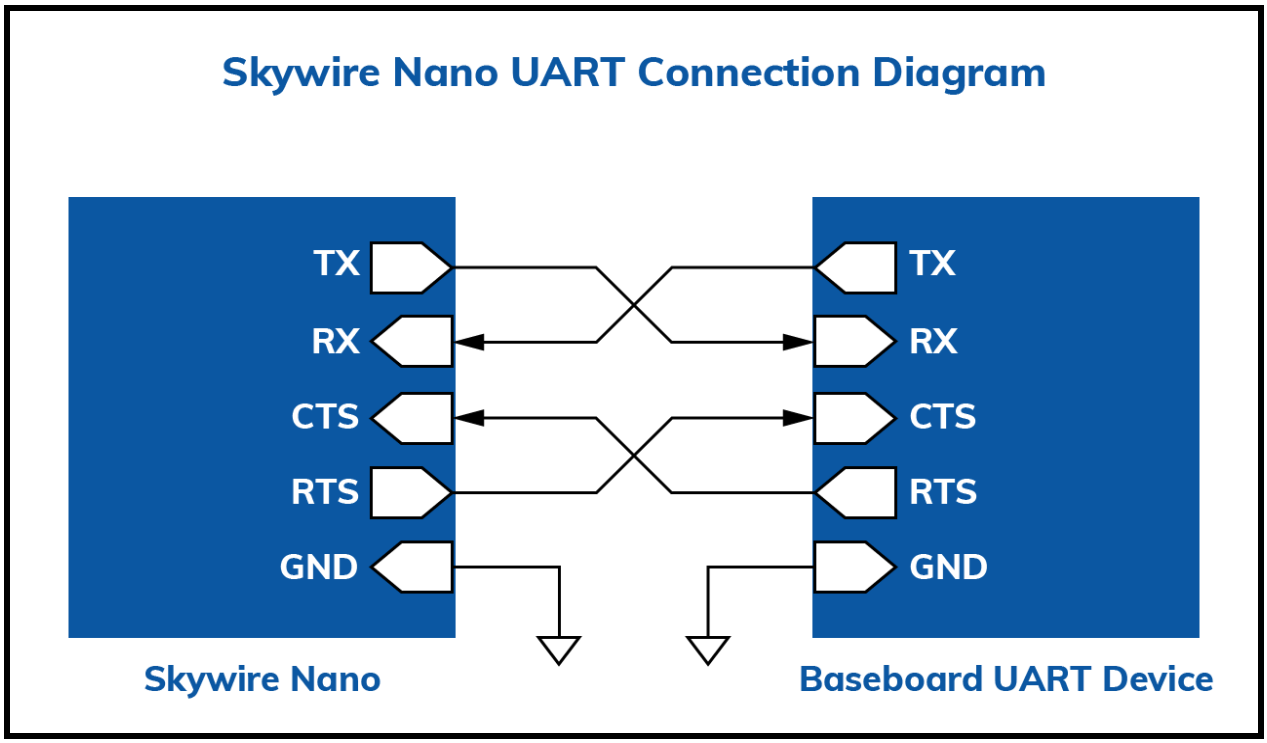

 © NimbeLink Corp. 2021. All rights reserved.

Downloaded from Arrow.com.

4.7.2 UART0

UART0 is a transmit-only serial port that is used by the modem to output debugging information and messages from the kernel. UART0 is also used as a Device Firmware Upgrade (DFU) path over serial for NL-SWN-LTE-NRF9160-B modems.

It is strongly recommended to implement UART0, but not strictly required.

If implemented, connect UART0 to the host controller or another UART communication device such as a USB-UART converter IC. If UART0 cannot be implemented, it is strongly recommended to connect these pins to test points or a non-populated header.

Choosing to leave UART0 unconnected will make it difficult to provide the highest level of support in the event of issues with the modem, and will make the DFU path over serial inaccessible for NL-SWN-LTE-NRF9160-B modems.

The following GPIO pins are mapped to the UART0 interface, and cannot be changed:

Pin #	Pin Name	Type	Pin Description	If Not Used
52	IO28_UART0_RX	DI	UART0 RX Input Pin Strongly recommended to connect.	Optionally connect to a test point or a non-populated debug header. Otherwise, leave unconnected.
54	IO29_UART0_TX	DO	UART0 TX Output Pin Strongly recommended to connect.	Optionally connect to a test point or a non-populated debug header. Otherwise, leave unconnected.
56	IO27_UART0_RTS	DO	UART0 RTS Output Pin Active-Low flow control output for UART0, strongly recommended to connect.	Optionally connect to a test point or a non-populated debug header. Otherwise, leave unconnected.
58	IO26_UART0_CTS	DI	UART0 CTS Input Pin Active-Low flow control input for UART0, strongly recommended to connect.	Tie to GND with a pull down resistor. Optionally connect to a test point or a non-populated debug header.

© NimbeLink Corp. 2021. All rights reserved.

Downloaded from Arrow.com.

4.7.3 UART1

UART1 is the main communication path for the Skywire Nano, and **must be implemented.** The AT command parser for the modem exists on this UART, and all AT commands should be sent to this port.

The UART1 TX/RX pins must be connected to the host controller, another UART communication device such as a USB-UART converter IC, or a debug header.

It is strongly recommended to connect the UART1 RTS/CTS signals as well, but this is not strictly required.

The following GPIO pins are mapped to the UART1 interface, and cannot be changed:

Pin #	Pin Name	Type	Pin Description	If Not Used
44	IO0_UART1_RX	DI	UART1 RX Input Pin	Must be implemented
46	IO1_UART1_TX	DO	UART1 TX Output Pin	Must be implemented
48	IO14_UART1_RTS_AIN1	DO	UART1 RTS Output Pin Active-Low flow control output for UART1, strongly recommended to connect.	Optionally connect to a test point or a non-populated debug header. Otherwise, leave unconnected.
50	IO15_UART1_CTS_AIN2	DI	UART1 CTS Input Pin Active-Low flow control input for UART1, strongly recommended to connect.	Tie to GND with a pull down resistor. Optionally connect to a test point or a non-populated debug header.

 © NimbeLink Corp. 2021. All rights reserved.

Downloaded from Arrow.com.

4.7.4 Flow Control AT Command

Flow control can be turned on and off for UART1 with the AT+IFC command. Flow control for UART0 is currently not supported.

By default, flow control is disabled. Modified flow control settings do not persist across modem reboots or power cycles, and must be set for each power-up.

Set Command Syntax:

AT+IFC=<rts>,<cts>
OK

<rts>
0 - flow control disable
2 - C105 (RTS) enable

<cts>
0 - flow control disable
2 - C106 (CTS) enable

Note: *the values provided for <rts> and <cts> must be the same.*

Read Command Syntax:

AT+IFC?
+IFC: <rts>,<cts>

Test Command Syntax:

AT+IFC=?
+IFC: (0,2),(0,2)
OK

To turn flow control on, issue the following command:

AT+IFC=2,2

To turn flow control off, issue the following command:

AT+IFC=0,0

To query the current flow control setting, issue the following command:

AT+IFC?

 © NimbeLink Corp. 2021. All rights reserved.

Downloaded from Arrow.com.

4.7.5 Baud Rate AT Command

The baud rate of the UART1 port can be set with the AT+IPR command. Changing the baud rate for the UART0 port is currently not supported.

By default, the UART ports default to 115200 baud 8N1. Modified baud rate settings do not persist across modem reboots or power cycles, and must be set for each power-up.

Set Command Syntax:

AT+IPR=<baud>
OK

<baud>
300, 600, 1200, 2400, 4800, 9600, 14400, 19200, 28800, 31250, 38400, 56000, 57600, 76800, 115200 (default), 230400, 250000, 460800, 921600, 1000000

Read Command Syntax:

AT+IPR?
+IPR: <baud>
OK

Test Command Syntax:

AT+IPR=?
+IPR=(600,1200,2400,4800,9600,14400,19200,28800,31250,38400,56000,57600,76800,115200,230400,250000,460800,921600,1000000)
OK

To set the baud rate, issue the following command:

AT+IPR=<baud>

To query the current baud rate setting, issue the following command:

AT+IPR?

 © NimbeLink Corp. 2021. All rights reserved.

Downloaded from Arrow.com.

4.8 SIM Interfaces

The Skywire Nano has the ability to swap between an on-board Verizon LTE-M soldered-down SIM, and an external SIM interface on the baseboard.

By default, the modem is configured to use the soldered-down SIM. However, the current SIM choice can be modified with the AT#SIMSELECT command.

The SIM selection signal is driven by pin IO16 on the cellular module, and is used to drive the input pin of the on-board SIM switch.

4.8.1 External SIM Interface Pins

The following pins are attached to the external SIM interface on the modem:

Pin #	Pin Name	Type	Pin Description	If Not Used
29	EXT_VCC_SIM	PO	External SIM Interface VCC Output Pin, Fixed 1.8V	No connect
31	EXT_SIM_RST	DO	External SIM Interface Reset Pin, Fixed 1.8V	No connect
33	EXT_SIM_IO	IO	External SIM Interface I/O Pin, Fixed 1.8V	No connect
35	EXT_SIM_CLK	DO	External SIM Interface Clock Pin, Fixed 1.8V	No connect

The external SIM interface can be connected to a compatible SIM on the baseboard (such as a SIM connector, eSIM, or soldered-down MFF2 SIM), allowing the modem to dynamically switch between Verizon LTE-M, and additional cellular network(s).

The traces connecting the external SIM interface pins should be as short as possible, and proper high-speed PCB design principles should be followed in order to ensure the highest possible signal integrity.

It is also recommended to add an ESD/EMI protection IC on the baseboard, especially in situations that are prone to EMI and ESD, like users inserting SIM cards into SIM connectors. The NL-SWNDK PCB design files can be referenced for an ideal implementation of the modem's external SIM Interface with an ESD/EMI protection IC.

In the event that a protection IC is not used, it is recommended to add appropriate bypass capacitors in the pF range to each signal near the J1 connector.

Refer to manufacturer documentation for schematic and layout guidelines and appropriate capacitor selection for the chosen SIM solution on the baseboard.

© NimbeLink Corp. 2021. All rights reserved.

Downloaded from Arrow.com.

4.8.2 Swapping the Active SIM Interface

The active SIM interface can be changed between the soldered-down SIM and the external SIM interface with the AT#SIMSELECT command:

Set Command Syntax:

AT#SIMSELECT=<interface>
OK

<interface>
0 - Soldered-Down Verizon LTE-M SIM
1 - External SIM Interface

Read Command Syntax:

AT#SIMSELECT?
#SIMSELECT: <interface>
OK

Test Command Syntax:

AT#SIMSELECT=?
#SIMSELECT: (0,1)
OK

Before changing the SIMSELECT setting, the LTE radio must be turned off by issuing the AT+CFUN=4 command. This will cause the modem to deregister from the network.

Note: *The +SIMSELECT setting is saved in NVM, and persists across power cycles.*

To select the soldered-down SIM, issue the following commands:

AT+CFUN=4

AT#SIMSELECT=0

AT+CFUN=1

To select the external SIM interface, issue the following commands:

AT+CFUN=4

AT#SIMSELECT=1

AT+CFUN=1

 © NimbeLink Corp. 2021. All rights reserved.

Downloaded from Arrow.com.

4.9 GPIO Pins

The Skywire Nano has a total 31 of GPIO pins that are brought out on connector J1. By default, all GPIO pins are configured as inputs at initial power on. Users should use the AT#GPIO command to further define the usage for each GPIO in their design.

Eight GPIO pins are reserved for the UART0 and UART1 serial interfaces. This leaves 23 GPIO available for application use. Each GPIO can source or sink up to 4mA of current.

Pin #	Pin Name	Type	Pin Description	If Not Used
4, 6, 8, 10, 12, 14, 16, 18, 20, 22, 24, 26, 30, 32, 34, 36, 38, 39, 40, 41, 43, 44, 45, 46 47, 48, 50, 52, 54, 56, 58	IO0 - IO31 (except IO16)	IO	Digital I/O pins. Some pins may have alternate functions (i.e. UART pins)	No connect, see Section 4.9.1 regarding terminating unused GPIO.

Note: *IO16 is not included in the table above since it controls the SIM selection signal, and is not brought out on connector J1.*

Note 2: *IO5 is reserved during boot and can be used to trigger DFU mode.* ***Do not drive this pin when booting the modem during normal operation.*** *See Section 4.12.2.*

The configuration and states of the GPIO pins are controlled by the AT#GPIO command:

Set Command Syntax:

AT#GPIO=(<pin>,<pin_mask>),<action>,[(<state>,<state_mask>)|(<dir>,<dir_mask>)]
#GPIO: (<state>,<state_mask)
OK

<pin>
The single GPIO pin that <action> should be taken on.

<pin_mask>
32 character bitmask where MSB corresponds to IO31, and LSB corresponds to IO0.
0 - Do not read/configure/write the pin at this index
1 - Do read/configure/write the pin at this index

<action>
0 - Read GPIO pin state
1 - Write to GPIO pin
2 - Configure GPIO pin

 © NimbeLink Corp. 2021. All rights reserved.

Downloaded from Arrow.com.

<state>
When is <action> is 1
0 - Logic level LOW
1 - Logic level HIGH

<state_mask>
32 character bitmask where MSB corresponds to IO31, and LSB corresponds to IO0.
0 - Set pin at this index logic level LOW
1 - Set pin at this index logic level HIGH

<dir>
When <action> is 2
0 - Configure pin as output
1 - Configure pin as input

<dir_mask>
When <action> is 2
32 character bitmask where MSB corresponds to IO31, and LSB corresponds to IO0.
0 - Configure pin at this index as output
1 - Configure pin at this index as input

Note: *The IO pins reserved for UART0 and UART1 are unaffected by the AT#GPIO command, and cannot be reconfigured.*

Test Command Syntax:

AT#GPIO=?
#GPIO=(<pin>|<mask>),0
#GPIO=(<pin>|<mask>),1,(<state>|<mask>)
#GPIO=(<pin>|<mask>),2,(<dir>|<mask>)
OK

A few usage examples of the AT#GPIO commands are shown below:

To read the state of just IO2, issue the following command:

AT#GPIO=2,0

#GPIO: 0

OK

 © NimbeLink Corp. 2021. All rights reserved.

Downloaded from Arrow.com.

To read the states of the 23 unclaimed GPIO pins, issue the following command:

AT#GPIO=11000011111111100011111111111100,0

#GPIO: 00000000000000000000000000000000

OK

To configure just IO3 to be an input, issue the following command:

AT#GPIO=3,2,1

OK

To configure pins IO30 and IO31 to be outputs, issue the following command:

AT#GPIO=11000000000000000000000000000000,2,0

OK

To set pins IO30 and IO31 to be logic level HIGH, send the following command:

AT#GPIO=11000000000000000000000000000000,1,1

OK

4.9.1 Terminating Unused GPIO Pins

By default the GPIO pins are set to inputs at initial power on to prevent any conflicts with custom baseboard designs. Unterminated input pins are susceptible to damage. Therefore, all unused GPIO pins must be configured as outputs and driven to a state.

For example, to configure all GPIO pins as outputs, and drive them low, issue the following commands:

AT#GPIO=11000011111111100011111111111100,2,0

OK

AT#GPIO=11000011111111100011111111111100,1,0

OK

 © NimbeLink Corp. 2021. All rights reserved.

Downloaded from Arrow.com.

4.10 SWD Pins

The Skywire Nano has two SWD pins that can be used to debug and flash customer code and NimbeLink AT application onto the modem:

Pin #	Pin Name	Type	Pin Description	If Not Used
55	SWDCLK	DI	SWD interface clock signal. Internally pulled-down. Strongly recommended to connect to a debug header.	Connect to a test point or a no-pop header.
57	SWDIO	IO	SWD interface bidirectional I/O signal. Internally pulled-up. Strongly recommended to connect to a debug header.	Connect to a test point or a no-pop header.

The Skywire Nano's SWD pins should be connected to a debug header to allow for easy debugging and flashing using an external debug probe. If the SWD interface is unused, connect the pins to test points or a non-populated header.

The SWD pins can only be used to debug and program customer code and NimbeLink's AT application. It is not possible to use the SWD pins to update the NimbeLink stack or cellular module firmware.

© NimbeLink Corp. 2021. All rights reserved.

Downloaded from Arrow.com.

4.11 MAGPIO Pins

The Skywire Nano has three fixed 1.8V I/O pins that can be used to control external antenna tuning circuitry:

Pin #	Pin Name	Type	Pin Description	If Not Used
49	MAGPIO2	DO	Antenna Tuning GPIO pin #2, Fixed 1.8V	No connect
51	MAGPIO1	DO	Antenna Tuning GPIO pin #1, Fixed 1.8V	No connect
53	MAGPIO0	DO	Antenna Tuning GPIO pin #0, Fixed 1.8V	No connect

The MAGPIO pins are intended for use only with advanced designs that employ SMT chip antennas or PCB antennas, and utilize multiple antenna matching networks to swap between cellular bands.

For most users, a wide-band LTE antenna that offers high efficiency across the entire LTE spectrum is ideal. See Section 4.13.3 for NimbeLink-recommended LTE antennas that are suitable for use with the Skywire Nano.

The configuration of the MAGPIO pins is controlled by the AT%XMAGPIO command. Please refer to the Skywire Nano AT command manual for more information:

https://nimbelink.com/Documentation/Skywire/Nano/4G_LTE_Cat_M1_Nordic/1002399_NL-SWN-LTE-NRF9160_AT-Command-Manual.pdf

4.12 Debugging and Flashing the Modem

4.12.1 Overview

Section 4.12 contains a high-level overview of the various firmware update methods for the Skywire Nano. Please refer to the online software development documentation resources for complete information:

https://nimbelink.com/developer/

The Skywire Nano has several firmware packages loaded onto it at any given time:

- Cellular module firmware
- NimbeLink stack firmware
- NimbeLink AT application or customer application code

 © NimbeLink Corp. 2021. All rights reserved.

Downloaded from Arrow.com.

4.12.2 Serial DFU via UART0 (NL-SWN-LTE-NRF9160-B only)

The UART0 peripheral can be used to perform serial DFU for -B Skywire Nano modems. NL-SWN-LTE-NRF9160 modems do not have this functionality.

When in DFU mode the following firmware images can be updated:

- Cellular module firmware
- NimbeLink stack firmware
- NimbeLink AT application or customer application code

4.12.2.1 Entering DFU Mode via Pin 10 (IO5)

Pin 10 (IO5) is reserved during the modem boot procedure, and serves as a means to enter serial DFU mode.

During the modem's booting process, IO5 is weakly pulled down to GND, and is released after the modem has booted. After this, IO5 functions as a normal GPIO pin and can be used for any purpose.

To force the modem into DFU mode, IO5 should be asserted high before booting the modem by pulling it up to VCC_GPIO.

Note: *To guarantee proper operation of the modem, ensure that IO5 is never driven during the modem's normal boot procedure. Only assert IO5 before boot when performing serial DFU.*

4.12.3 SWD

The SWD pins on the modem can be used to:

- Debug and flash customer application code (NL-SWN-LTE-NRF9160-B only)
- Debug and flash NimbeLink's AT application

Note: *The SWD pins cannot be used to update the NimbeLink stack firmware or the cellular module firmware.*

4.12.4 Firmware Over The Air (FOTA)

FOTA updates can be performed to update any firmware package on the modem:

- Cellular module firmware
- NimbeLink stack firmware
- NimbeLink AT application or customer application code

 © NimbeLink Corp. 2021. All rights reserved.

Downloaded from Arrow.com.

4.13 Cellular Interface

4.13.1 Supported LTE Bands

The table below lists each of the bands that are supported by the Skywire Nano:

Band	Notes	Uplink (MHz)	Downlink (MHz)
B1		1920 – 1980	2110 – 2170
B2		1850 – 1910	1930 – 1990
B3		1710 – 1785	1805 – 1880
B4		1710 – 1755	2110 – 2155
B5		824 – 849	869 – 894
B8		880 – 915	925 – 960
B12		698 – 716	728 – 746
B13		777 – 787	746 – 756
B14	LTE-M Only	788 – 798	758 – 768
B17		704 – 716	734 – 746
B18	LTE-M Only	815 – 830	860 – 875
B19		830 – 845	875 – 890
B20		832 – 862	791 – 821
B25		1850 – 1915	1930 – 1995
B26		814 – 849	859 – 894
B28		703 – 748	758 – 803
B66		1710 – 1780	2110 – 2200

© NimbeLink Corp. 2021. All rights reserved.

Downloaded from Arrow.com.

4.13.3 Cellular Antenna Requirements

NL-SWN-LTE-NRF9160 modems have a Single-Input Single-Output (SISO) cellular interface that supports LTE CAT-M1, LTE CAT-NB1, and LTE CAT-NB2.

The cellular interface of the modem is connected to the primary U.FL antenna connector, X1. Many antennas use SMA connectors, so it may be necessary to utilize a U.FL to SMA cable, such as the Taoglas CAB.011.

The chosen cellular antenna must meet or exceed the following specifications:

Parameter	Min.	Typ.	Max.
Characteristic Impedance		50 Ω	
VSWR	<3:1	<2:1	
Return Loss	>6.0 dB	>9.5 dB	
Efficiency		>50 %	
Maximum Input Power			1 W

4.13.4 Recommended Cellular Antennas

The table below contains several cellular antennas that are compatible with the modem. It is recommended to choose a wide-band LTE antenna with acceptable efficiency across the applicable bands:

Type	Manufacturer	Part Number
Internal Cellular Antenna[1]	Taoglas	FXUB65.07.0180C
External Cellular Antenna[1]	Taoglas	TG.30.8113
External Cellular Antenna[1]	Taoglas	TG.10.0113

Note 1: *U.FL to SMA adapter required.*

 © NimbeLink Corp. 2021. All rights reserved.

Downloaded from Arrow.com.

4.14 GPS Interface

The Skywire Nano features an integrated GPS receiver that supports L1 C/A reception at 1575 MHz. The operation of the GPS receiver is time-multiplexed with the LTE radio, meaning the GPS position can only be taken when the LTE radio is in RRC Idle mode, Power Save Mode (PSM), or when the LTE radio is deactivated.

4.14.1 GPS Antenna Requirements

An external antenna must be connected to the U.FL connector for the GPS interface, X3. It is strongly recommended to use an active GPS antenna for optimal performance, but a passive antenna may also be used.

Note: *When employing a passive GPS antenna, additional matching and/or an LNA on the baseboard may be required in order to achieve acceptable performance.*

The modem has an on-board LDO that can be used to supply power to an active antenna attached to the connector, X3. When enabled, the LDO biases the GPS antenna at 3.3V in order to power the LNA inside of the active antenna. A DC blocking capacitor is included on the modem to isolate the GPS receiver from the 3.3V DC bias.

The modem also utilizes an onboard SAW filter to provide 26dB of attenuation for out of band signals.

The chosen active antenna must meet or exceed the following specifications:

Parameter	Min.	Typ.	Max.
Characteristic Impedance	50 Ω		
Antenna Type	Active Antenna (strongly recommended) or Passive Antenna		
Center Frequency	1575.42 MHz		
VSWR	< 3:1	< 2:1	
Return Loss	> 6.0 dB	> 9.5 dB	
Efficiency		>50 %	
Active Antenna Supply Voltage	≤ 3.2V		
Active Antenna LNA Gain		> 15 dB	
Maximum LNA Noise Factor			1.5 dB

 © NimbeLink Corp. 2021. All rights reserved.

Downloaded from Arrow.com.

4.14.2 GPS Operation

The operation of the GPS interface is controlled with the AT#GPS command:

Set Command Syntax:

AT#GPS=<action>[,<flags>]
#GPS: <action>

<action>
0 - Stop GPS receiver
1 - Start GPS receiver
2 - Query the current location

<flags>
TBD
Read Command Syntax:

AT#GPS?
#GPS: <action>,<flags>

Test Command Syntax:

AT#GPS=?
#GPS=0
#GPS=1[,<flags>]
#GPS=2

As mentioned previously, the LTE radio must be in LTE RRC Idle mode, PSM mode or turned off entirely (+CFUN: 4 mode) before using the GPS receiver.

To turn on the GPS receiver, issue the following commands:

AT+CFUN=4

AT#GPS=1

The above sequence forces the modem to detach from the cellular network, enables the GPS receiver and turns on the LDO that supplies 3.3V DC to the GPS interface.

By default, GPS unsolicited result codes (URC) are enabled, and the modem will begin to print out GPS status messages and location data to UART1. For example:

#GPS: tracking 3 using 3 unhealthy 0

#GPS: tracking 4 using 4 unhealthy 0

 © NimbeLink Corp. 2021. All rights reserved.

Downloaded from Arrow.com.

When the modem gets a position fix, it will start outputting URC's with NMEA sentences that contain location data. The GPS URC's will continue to stream to UART1 as long as they are enabled. For example:

#GPS: $GPGGA,223243.89,4501.35046,N,09327.35260,W,1,05,4.26,271.96,M,0,,*31

#GPS: $GPGLL,4501.35046,N,09327.35260,W,223243.89,A,A*75

#GPS: $GPGSA,A,3,02,05,13,15,,,,,,,,7.03,4.26,5.59,1*13

#GPS: $GPGSV,2,1,5,2,18,103,34,5,43,055,45,13,42,114,44,15,40,161,33,1*59

#GPS: $GPGSV,2,2,5,25,00,000,31,1*64

#GPS: $GPRMC,223243.89,A,4501.35046,N,09327.35260,W,0.12,0.00,300620,,,A,V*3C

To turn off GPS URC's, send the following command:

AT#URC="GPS",0

The current location data can be manually queried with this command:

AT#GPS=2

The above command will return current location data, or an error if a position fix has not yet been achieved. For example:

#GPS: 45.022,-93.455

The GPS URC's can be turned back on with:

AT#URC="GPS",1

To stop GPS operation, send the following command:

AT#GPS=0

4.14.3 GPS Antenna Placement Guidelines

- The antenna must be installed according to the antenna manufacturer’s instructions in order to obtain the maximum performance of the GPS receiver.
- The antenna location must be evaluated carefully if operating in conjunction with any other antenna or transmitter.
- The antenna must not be installed inside metal cases or near any obstacle that may degrade features like antenna lobes and gain.
- Keep the antenna and the antenna cabling away from any power supply lines, noisy EM devices, and wireless RF lines.

 © NimbeLink Corp. 2021. All rights reserved.

Downloaded from Arrow.com.

4.14.4 Recommended GPS Antennas

The table below contains several GPS antennas that are compatible with the modem:

Type	Manufacturer	Part Number
GPS/GALILEO Antenna, Internal	Taoglas	AP.17E.07.0064A
GPS/GALILEO Antenna, External[1]	Taoglas	AA.109.301111
GPS/GALILEO Antenna, External[1]	Taoglas	AA.108.301111

Note 1: *U.FL to SMA adapter required.*

4.15 Firmware Updates Over the Air (FOTA)

LTE networks are constantly being updated, improved, and enhanced with new features. As a result, carriers are making frequent network changes. Most will not negatively affect devices connected to those networks, but occasionally an update will prevent an unprepared device from reconnecting to the network permanently.

To account for these future changes, FOTA (Firmware over the Air) capability is being added to cellular modules by each manufacturer. Accordingly, NimbeLink supports this functionality in the entire Skywire family of embedded modems. As such, it is highly recommended that designers implement provisions to accommodate for FOTA processes. Failure to accommodate FOTA processes may result in interruptions in cellular connectivity in the event of network changes. If a device can no longer access the network, FOTA cannot be used to remedy the problem. The only way to recover functionality is to physically update the device firmware.

FOTA Instructions are available on NimbeLink's website here:

https://nimbelink.com/Documentation/Skywire/Nano/4G_LTE_Cat_M1_Nordic/1002401_NL-SW-LTE-NRF9160_FOTA-Guide.pdf

4.16 Skywire Reference Design

NimbeLink offers free reference schematics and layout files in order to provide examples of how to properly integrate Skywire Nano modems into customer designs.

The NL-SWNDK development kit is specifically made for use with the Skywire Nano. Schematics and design files for this development kit are available on the NL-SWNDK product page:

https://nimbelink.com/products/skywire-nano-dev-kit-swndk/

 © NimbeLink Corp. 2021. All rights reserved.

Downloaded from Arrow.com.

4.17 Design Review Service

NimbeLink also offers design reviews for customers integrating Skywire modems into their products. Please contact the following email address for more information:

product.support@nimbelink.com

5. Regulatory information

5.1 Cellular Certifications

Verizon ODI: Complete, **PTCRB:** Complete, **AT&T:** In Progress, **GCF:** In Progress

5.2 Export Control Classification Number (ECCN)

ECCNs are five character alphanumeric designations used on the Commerce Control List (CCL) to identify dual-use items for export control purposes. An ECCN categorizes items based on the nature of the product, i.e. type of commodity, software, or technology and its respective technical parameters.

ECCN for All Skywire Modems: 5A992.c

5.3 Harmonized Tariff Schedule Code

HTS Code: 8517.62.0010

5.4 RoHS Compliance

The NL-SWN-LTE-NRF9160 complies with the RoHS (Restriction of Hazardous Substances) directive of the European Union, EU Directive 2011/65/EU.

5.5 Interference Statement

This device complies with Part 15 of the FCC Rules and Industry Canada licence-exempt RSS standards. Operation is subject to the following two conditions: (1) This device may not cause harmful interferences, and (2) this device must accept any interference received, including interference that may cause undesired operation.

5.6 FCC & IC Compliance

If the modem’s antenna is located farther than 20cm from the human body and there are no adjacent transmitters, the FCC and IC approvals of the modem's Nordic nRF9160 cellular module can be reused by the end product.

If the modem's antenna is mounted closer than 20cm from the human body, or if there are adjacent transmitters, additional FCC/IC testing may be required for the end device.

 © NimbeLink Corp. 2021. All rights reserved.

Downloaded from Arrow.com.

NL-SWN-LTE-NRF9160 modems make use of the FCC ID and Industry Canada ID (IC ID) of the on-board Nordic nRF9160 cellular module:

Orderable Device	FCC ID	IC ID
NL-SWN-LTE-NRF9160	2ANPO00NRF9160	24529-NRF9160
NL-SWN-LTE-NRF9160-B		

The FCC certificate is available at the following link by searching for the FCC ID listed above:

https://www.fcc.gov/oet/ea/fccid

The IC ID certificate is available at the following link by searching for the IC ID listed above:

https://sms-sgs.ic.gc.ca/equipmentSearch/searchRadioEquipments?execution=e1s1&lang=en

5.7 Wireless Notice

In order to comply with FCC and IC radiation exposure limits for an uncontrolled environment alongside carrier specific certifications, the antennas cannot exceed the maximum gain levels listed here:

Cellular Band	Center Frequency	Technology	Max. Antenna Gain
Band 2	1900 MHz	LTE CAT-M1 and LTE NB1/NB2	9.0 dBi
Band 4	1700 MHz		6.0 dBi
Band 5	850 MHz		7.1 dBi
Band 12	700 MHz		6.6 dBi
Band 13	700 MHz		6.9 dBi
Band 17	700 MHz		6.6 dBi
Band 25	1900 MHz		9.0 dBi
Band 26	850 MHz		7.0 dBi
Band 66	1700 MHz		6.0 dBi
Band 14	700 MHz	LTE CAT-M1 Only	6.9 dBi

© NimbeLink Corp. 2021. All rights reserved.

Downloaded from Arrow.com.

5.8 End-Product Labeling Requirements

End products utilizing NL-SWN-LTE-NRF9160 modems must be labeled with the following information:

Device Uses Approved Radio: NL-SWN-LTE-NRF9160

Contains FCC ID: 2ANPO00NRF9160

Contains IC ID: 24529-NRF9160

This device complies with Part 15 of the FCC Rules and Industry Canada licence-exempt RSS standards. Operation is subject to the following two conditions: (1) This device may not cause harmful interferences, and (2) this device must accept any interference received, including interference that may cause undesired operation.

 © NimbeLink Corp. 2021. All rights reserved.

Downloaded from Arrow.com.

6. Document Version Information

Revision	Author	Description	Date
1	SR	Initial document release.	02/05/20
2	SR	Updated document to match the production version of Skywire Nano.	07/01/20
3	SR	Changed the connection recommendation for UART0. Updated the LTE-M and NB-IoT upload and download speeds.	07/24/20
4	SR	General updates for NL-SWN-LTE-NRF9160-B release: Added links to software development docs, and updated UART0 notes to document UART DFU functionality on the NL-SWN-LTE-NRF9160-B. Added a section to document the various firmware update paths for the modem. Added a specification for customer-accessible RAM and flash memory. Added a max current sourcing/sinking spec for GPIO pins. Updated the GPS specifications to include support for passive antennas. Fixed notes referencing the internal pull-up and pull-down on SWDIO and SWDCLK, respectively. Added a label specification.	01/04/21

© NimbeLink Corp. 2021. All rights reserved.

Downloaded from Arrow.com.