RZ/N2L Group

RZ Arm-based High-end 32 & 64-bit MPUs

R01DS0397EJ0140
Rev.1.40
Mar 31, 2026

200/400 MHz, Arm® Cortex®-R52 on-chip FPU and NEON™, 1.5 MB of on-chip SRAM, Ethernet MAC, EtherCAT, USB 2.0 high-speed, CAN/CANFD, various communications interfaces such as an xSPI and ΔΣ interface, and security functions

# Features

## On-chip 32-bit Arm Cortex-R52 processor

- High-speed realtime control with operating frequency of 200/400 MHz
- On-chip Single 32-bit Arm Cortex-R52 (revision r1p3)
- Tightly coupled memory (TCM) with ECC
  - CPU0: 128 KB/128 KB
- Instruction cache/data cache with ECC
  - CPU0: 16 KB per cache
- High-speed interrupt
- The FPU supports addition, subtraction, multiplication, division, multiply-and-accumulate, and square-root operations at single-precision and double-precision.
- The NEON, Advanced SIMD, supports integer or single precision results.
- Harvard architecture with 8-stage pipeline
- Supports the memory protection unit (MPU)
- Arm CoreSight architecture, includes support for debugging through JTAG and SWD interfaces.

## Low power consumption

- Standby mode and module stop function

## On-chip SRAM

- 1.5 MB of the on-chip SRAM with ECC
- 150/200 MHz

## Data transfer

- DMAC: 8 channels × 2 units

## Event link controller

- Module operations can be started by event signals rather than by interrupt handlers.
- Linked operation of modules is available even while the CPU is in the standby state.

## Reset and power supply voltage control

- Four reset sources including a pin reset

## Clock functions

- External clock/oscillator input frequency: 25 MHz
- CPU clock frequency: 200/400 MHz or 150/300 MHz
- System clock frequency: 200 MHz or 150 MHz
- Low-speed on-chip oscillator (LOCO): 240 kHz

## Safety functions

- Register write protection, input clock oscillation stop detection and CRC
- Master Memory Protection Unit (MPU)

## Security functions (optional)

- Boot mode with security through encryption
- JTAG authentication
- Cryptologic accelerator
- TRNG

## Various communications interfaces

- Ethernet
  - EtherCAT slave Controller: 3 ports
  - Ethernet switch: 3 ports
  - Ethernet MAC: 1 port
- USB 2.0 high-speed host/functions: 1 channel
- CAN/CANFD (compliant with ISO11898-1): 2 channels
- SCI with 16-byte transmission and reception FIFOs: 6 channels
- I2C bus interface: 3 channel for transfer at up to 400 kbps
- SPI: 4 channels
- xSPI: 2 channels

## External host interfaces

- Serial host interface (SHOSTIF)
- Parallel host interface (PHOSTIF)

## External address space

- Buses for high-speed data transfer at up to 100 MHz
- Support for up to 4 CS areas
- 8- or 16-bit bus space is selectable per area

## Up to 35 extended-function timers

- 16-bit × 8 + 32-bit MTU3 (9 channels), 32-bit GPT (18 channels): Input capture, output compare, PWM waveform output
- 16-bit CMT (6 channels), 32-bit CMTW (2 channels)

## ΔΣ interface

- Up to 6 ΔΣ modulators are connectable externally.

## Trigonometric function unit

- Simultaneous calculation of sine and cosine
- Simultaneous calculation of arctangent and hypot_k

## 12-bit A/D converter

- 12 bits × 2 unit (4 channels for unit 0, 8 channels for unit 1)

## Temperature sensor for measuring temperature within the chip

## General-purpose I/O ports

- Input pull-up/pull-down
- The locations of input/output functions for peripheral modules are selectable from among multiple pins.

## Operating temperature range

- Tj = -40 to +125°C



Downloaded from Arrow.com.

# 1. Overview

## 1.1 Outline of Specifications

The MPU is a high-performance ASSP that has Arm Cortex®-R52 processor with Floating-Point Unit (FPU) and NEON™. It incorporates integrated peripheral functions necessary for system configuration.

**Table 1.1 CPU**

| Feature | Functional description |
|---|---|
| Arm® Cortex®-R52 | ● Single processor<br>● Operating frequency<br>– 200 MHz/400 MHz (in case of 200 MHz system clock)<br>– 150 MHz/300 MHz (in case of 150 MHz system clock)<br>● 32-bit CPU Cortex-R52 designed by Arm (core revision r1p3)<br>● Address space: 4 GB<br>● Instruction cache<br>– 16 KB (with ECC)<br>● Data cache<br>– 16 KB (with ECC)<br>● Tightly coupled memory (TCM)<br>– ATCM: 128 KB (with ECC) 0 wait<br>– BTCM: 128 KB (with ECC) 0 wait<br>– CTCM: 0 KB (with ECC)<br>● Instruction set: Arm v8-R architecture, so support includes Thumb® and Thumb-2<br>● Data arrangement<br>– Instructions: Little endian<br>– Data: Little endian<br>● 2-stage memory protection unit (MPU) |
| FPU | ● Supports addition, subtraction, multiplication, division, multiply-and-accumulate, and square-root operations at single- and double-precision.<br>● Registers<br>64-bit single-word registers: 64 bits × 32<br>(can be used as 16 double-word registers: 128 bits × 16) |
| NEON | The Advanced SIMD supporting integer or single precision results |

**Table 1.2 Memory**

| Feature | Functional description |
|---|---|
| On-chip system SRAM with ECC | ● Capacity: Up to 1.5 MB (512 KB × 3 units) (with ECC)<br>● Operating frequency: 150 MHz/200 MHz<br>● SEC-DED (single error correction/double error detection)<br>Error injection supported |
| One-time programmable memory | ● Overwrite protection<br>● Redundancy support<br>● Available information<br>– Unique ID<br>– Authentication settings<br>– Trimming data<br>– Boot mode setting<br>– User area |

**Table 1.3 System (1 of 2)**

| Feature | Functional description |
|---|---|
| Operating modes | The operating mode can be selected from the following eight boot modes:<br>● xSPI0 boot mode (CS0 × 1 boot Serial Flash)<br>● xSPI0 boot mode (CS0 × 8 boot Serial Flash)<br>● 16-bit bus boot mode (CS0 NOR Flash)<br>● SHOSTIF boot mode<br>● PHOSTIF boot mode<br>● xSPI1 boot mode (CS0 × 1 boot Serial Flash)<br>● SCI boot mode<br>● USB boot mode |



Downloaded from Arrow.com.

**Table 1.3 System (2 of 2)**

| Feature | Functional description |
|---|---|
| Clock generation circuit | ● The input clock can be selected from an external clock or external resonator.<br>● Detection of input clock oscillation stopping<br>● The following clocks are generated:<br>– CPU0 clock: System clock ×1 or ×2<br>– System clock: 150 or 200 MHz<br>– High-speed peripheral module clock: 150 or 200 MHz<br>– Middle-speed peripheral module clock: 75 or 100 MHz<br>– Low-speed peripheral module clock: 37.5 or 50 MHz<br>– ADC clock in the 12-bit A/D converter: 25 or 18.75 MHz<br>– External bus clock: 100 MHz (max.)<br>– Low-speed on-chip oscillator: 240 kHz (fixed) |
| Reset | RES# pin reset, software reset, error reset, CPU0 software reset |
| Low-power consumption function | ● Standby mode (Cortex-R52)<br>● Module stop function |
| Interrupt controller (ICU) | ● Peripheral function interrupts: 423 sources<br>● External interrupts: 16 sources (IRQ0 to IRQ15 pins)<br>● Software interrupts: 8 sources<br>● Non-maskable interrupts: 1 sources<br>● 32 levels specifiable for the order of priority |
| Bus state controller (BSC) | ● The external address space is divided into four areas (CS0, CS2, CS3, and CS5) for management.<br>● The following features are configurable for each area independently:<br>Bus size (8 or 16 bits): Available sizes depend on the area. Number of access wait cycles (different wait cycles can be specified for read and write access cycles in some areas). Idle wait cycle insertion (between same area access cycles or different area access cycles). Specifying the memory to be connected to each area enables direct connection to SRAM, SRAM with byte selection, SDRAM, and burst ROM (clocked synchronous or asynchronous). The address/data multiplexed I/O (MPX) interface is also available.<br>● Outputs a chip select signal (CS0# to CS5#) according to the target area (CS assert or negate timing can be selected by software).<br>● Connectable memory type for each area<br>CS0: SRAM, burst ROM<br>CS2: SRAM<br>CS2 + CS3: SRAM, SDRAM (CS2 only for SDRAM is not supported)<br>CS3: SRAM, SDRAM<br>CS5: SRAM, MPX-IO<br>● SDRAM refresh<br>Auto refresh or self-refresh mode selectable<br>● SDRAM burst access |

**Table 1.4 Direct memory access**

| Feature | Functional description |
|---|---|
| Direct memory access controller (DMAC) | ● 2 units (8 channels each unit)<br>● Transfer modes: Single transfer mode and block transfer mode<br>● Transfer size<br>- Unit 0: 1/2/4/8/16/32/64 bytes<br>- Unit 1: 1/2/4/8/16/32 bytes<br>● Activation sources: Software trigger, external DMA requests (DREQ), external interrupts, and interrupt requests from peripheral functions |

**Table 1.5 I/O Ports**

| Feature | Functional description |
|---|---|
| General-purpose I/O ports | ● 225-pin FBGA<br>– I/O pins: 134<br>– Input pins: 1<br>– Pull-up/pull-down resistors: 135<br>● 121-pin FBGA<br>– I/O pins: 71<br>– Input pins: 0<br>– Pull-up/pull-down resistors: 71<br>● The locations of input/output functions are selectable from among multiple pins. |



Downloaded from Arrow.com.

**Table 1.6 Event link**

| Feature | Functional description |
|---|---|
| Event link controller (ELC) | ● Up to 217 event signals can be interlinked with the operation of modules.<br>● In particular, the operation of timer modules can be started by input event signals.<br>● Event-linked operation of signals of ports 16 and port 18 is to be possible. |

**Table 1.7 Timers (1 of 2)**

| Feature | Functional description |
|---|---|
| Multi-function timer pulse unit 3 (MTU3) | ● 9 channels (16 bits × 8 channels, 32 bits × 1 channel)<br>● Maximum of 28 pulse-input/output and 3 pulse-input possible<br>● Select from among 10, 11, 12, or 14 counter-input clock signals for each channel (with maximum operating frequency of 200 MHz)<br>● Input capture function<br>● 39 output compare/input capture registers<br>● Counter clear operation (synchronous clearing by compare match/input capture)<br>● Simultaneous writing to multiple timer counters (TCNT)<br>● Simultaneous register input/output by synchronous counter operation<br>● Buffered operation<br>● Support for cascade-connected operation<br>● Automatic transfer of register data<br>● Pulse output mode<br>Toggle/PWM/complementary PWM/reset-synchronized PWM<br>● Complementary PWM output mode<br>- Outputs non-overlapping waveforms for controlling 3-phase inverters<br>- Automatic specification of dead times<br>- PWM duty cycle: Selectable as any value from 0% to 100%<br>- Delay can be applied to requests for A/D conversion.<br>- Non-generation of interrupt requests at peak or trough values of counters can be selected.<br>- Double buffer configuration<br>● Reset synchronous PWM mode<br>Six phases of positive and negative PWM waveforms can be output with desired duty cycles.<br>● Phase-counting mode: 16-bit mode (channels 1 and 2), 32-bit mode (channels 1 and 2 in cascade connection)<br>● Counter functionality for dead-time compensation<br>● Generation of triggers for A/D converter conversion<br>● A/D converter start triggers can be skipped<br>● Digital noise filter function for signals on the input capture and external counter clock pins<br>● Event linking by the ELC |
| General PWM timer (GPT) | ● 32 bits × 18 channels<br>● Counting up or down (saw-wave), counting up and down (triangle-wave) selectable for all channels<br>● Select from among four counter-input clock signals for each channel (with maximum operating frequency of 200 MHz)<br>● 2 input/output pins per channel<br>● 2 output compare/input capture registers per channel<br>● For the 2 output compare/input capture registers of each channel, 4 registers are provided as buffer registers and are capable of operating as comparison registers when buffering is not in use.<br>● In output compare operation, buffer switching can be at peaks or troughs, enabling the generation of laterally asymmetrically PWM waveforms.<br>● Registers for setting up frame intervals on each channel (with capability for generating interrupts on overflow or underflow)<br>● Synchronizable operation of the several counters<br>● Modes of synchronized operation (synchronized, or displaced by desired times for phase shifting)<br>● Generation of dead times in PWM operation<br>● Through combination of 3 counters, generation of automatic 3-phase PWM waveforms incorporating dead times<br>● Starting, clearing, stopping, switching, up/down counters, and input capture in response to external or internal triggers<br>● Starting, clearing, stopping, switching, up/down counters, and input capture in response to input level comparison<br>● Internal trigger sources: software and compare-match<br>● Generation of triggers for A/D converter conversion<br>● Digital noise filter function for signals on the input capture and external trigger pins<br>● Event linking by the ELC |



Downloaded from Arrow.com.

**Table 1.7 Timers (2 of 2)**

| Feature | Functional description |
|---|---|
| Compare match timer (CMT) | • (16 bits × 2 channels) × 3 units<br>• Select from among four counter-input clock signals for each channel (with maximum operating frequency of 50 MHz) |
| Compare match timer W (CMTW) | • (32 bits × 1 channel) × 2 units<br>• Compare-match, input-capture input, and output-comparison output are available.<br>• Select from among four counter-input clock signals for each channel (with maximum operating frequency of 50 MHz)<br>• Interrupt requests can be output in response to compare-match, input-capture, and output-comparison events. |
| Watchdog timer (WDT) | • 14 bits × 1 channel<br>• Select from among six counter-input clock signals for each channel (with maximum operating frequency of 50 MHz) |
| Port output enable 3 (POE3) | • Control of the high-impedance state of the MTU3 waveform output pins<br>• 5 pins for input from signal sources: POE0#, POE4#, POE8#, POE10#, POE11#<br>• Initiation on detection of short-circuited outputs (detection of simultaneous PWM output to the active level)<br>• Initiation by input clock oscillation-stoppage detection, PLL oscillation anomaly detection, DSMIF error detection, or software<br>• Additional programming of output control target pins is enabled |
| Port output enable for GPT (POEG) | • Controlling the output disable for GPT waveform output<br>• Initiation by input level detection of GTETRG pins<br>• Initiation by output disable request from GPT<br>• Initiation by detection of oscillation stop, DSMIF error, or by software |
| Real time clock (RTC) | • A 100 year calendar from 2000 to 2099<br>• BCD code display<br>• Clock source is division of main oscillator or PLL.<br>• Automatic adjustment function for leap years |

**Table 1.8 Communication interfaces (1 of 3)**

| Feature | Functional description |
|---|---|
| Ethernet MAC (GMAC) | • 1 port<br>• IEEE802.3<br>• IEEE1588-2008<br>• IEEE802.3-az-2010 for EEE<br>• 10BASE, 100BASE, and 1000BASE supported<br>• Full duplex and half duplex are supported<br>• Programmable frame length to support both standard and jumbo frames up to 16 KB<br>• 17 MAC address registers for the address filter block<br>• Variety of flexible addresses filtering modes are supported<br>• Advanced IEEE 1588-2002 & 2008 Ethernet frame time-stamping supported<br>• MII/RMII/RGMII interface is supported |



Downloaded from Arrow.com.

**Table 1.8 Communication interfaces (2 of 3)**

| Feature | Functional description |
|---|---|
| Ethernet switch (ETHSW) | • 3-port PHY interfaces<br>• IEEE802.3<br>• Support for 10/100/1000 Mbps data transfer<br>• Full and half duplex (1000 Mbps supports full-duplex only)<br>• Hardware switching, lookup, and filtering<br>• QoS with frame prioritization<br>• Priority control based on VLAN Priority (IEEE802.1q), which enables priority reassignment<br>• Classification and priority assignment based on IPv4 DiffServ Code Point Field, IPv6 Class of Service<br>• Queue with eight priority levels<br>• Multicasting and broadcasting<br>• VLAN frame<br>• IEEE 1588-2008 compatible<br>• Programmable addition, removal and manipulation of ingress and egress VLAN tags, supporting single and double-tagged VLAN frames on each port<br>• Cut-through and hub features<br>• Device level ring (DLR)<br>• Programmable egress rate limit per port<br>• Ingress Configurable Broadcast/multicast storm protection per port<br>• IEEE802.1X source address authentication supported<br>• IEEE802.1X guest VLAN supported<br>• PRP functionality (IEC 62439-3 edition 2.0- 2012)<br>• Configurable Time Multiplexed (TDMA) output queue scheduler supporting real-time network infrastructures using time slots for bandwidth reservation enabling deterministic delays<br>• Pattern matchers 12 channels<br>• Independent two timer module are available for timestamping and time for TDMA.<br>• Remote monitoring through SNMP<br>• Powerlink capable hub<br>• Ingress filtering and frame header manipulation (active stream identification, flow metering) with Enhanced Frame Parser<br>• 4 additional PTP timer pulse generators<br>• MAC to MAC connection<br>• MII/RMII/RGMII interface is supported |
| EtherCAT slave controller (ESC)*1 | • 1 channel (3 ports)<br>• EtherCAT Slave Controller IP core (made by Beckhoff Automation GmbH) implemented<br>• MII/RMII/RGMII interface is supported by external RGMII converter. |
| USB 2.0 HS host/function module | • 1 port<br>• Compliance with the USB 2.0 specification<br>• OTG support<br>• Transfer rate<br>High speed (480 Mbps), full speed (12 Mbps), low speed (1.5 Mbps, host only)<br>• Communications buffer<br>– Incorporates 1 KB of RAM for host mode<br>– Incorporates 8 KB of RAM for function mode<br>• DMAC (2 channels) incorporated |
| Serial communication interface (SCI) | • 6 channels<br>• 5 communication mode<br>– Asynchronous interfaces<br>– 8-bit clock synchronous interface<br>– Simple I2C (master-only)<br>– Simple SPI<br>– Smart card interface<br>• Clock source is select from among four internal clock signals<br>• Bit rate specifiable with the on-chip baud rate generator<br>• Full-duplex and half-duplex communication<br>• Data length: 7 to 9 bits (Asynchronous mode)<br>• Bit rate modulation<br>• Double speed mode<br>• Loopback function to enable self-diagnosis (Asynchronous, Clock synchronous mode) |
| $I^2C$ bus interface (IIC) | • 3 channels<br>• Communication formats: I2C bus format or SMBus format<br>• Master or slave mode selectable<br>• Supports the multi-master<br>• Maximum transfer rate: 400 kbps (Standard mode and Fast mode) |



Downloaded from Arrow.com.

**Table 1.8 Communication interfaces (3 of 3)**

| Feature | Functional description |
|---|---|
| CAN-FD module (CANFD) | ● 2 channels<br>● Comply with CAN-FD ISO 11898-1 (2015)<br>● Communication speed<br>– Classical CAN mode: 1 Mbps<br>– CAN FD mode:<br>Nominal bit rate: max. 1 Mbps<br>Data bit rate: max. 8 Mbps<br>● Total 192 message buffers (in case frame size is 76 bytes)<br>– Individual buffers: 64 for TX<br>– Shared buffers: 128 for TX and RX including FIFO<br>● Selectable ID type with 11-bit Standard and 18-bit Extended<br>● Selectable Frame type: Data Frame and Remote Frame<br>● Up to 256 receive rules |
| Serial peripheral interface (SPI) | ● 4 channels<br>● SPI transfer facility<br>– Using the MOSI (master out slave in), MISO (master in slave out), SSL (slave select), and RSPCK (SPI clock) signals enable serial transfer through SPI operation (four lines) or clock-synchronous operation (three lines)<br>– Capable of handling serial transfer as a master or slave<br>● Data formats<br>– Switching between MSB first and LSB first<br>– The number of bits in each transfer can be changed to any number of bits from 8 to 16, or 20, 24, or 32 bits.<br>– 128-bit buffers for transmission and reception<br>– Up to four frames can be transmitted or received in a single transfer operation (with each frame having up to 32 bits)<br>● Buffered structure<br>– Double buffers for both transmission and reception<br>● RSPCK can be stopped automatically with the reception buffer full for master reception |
| Expanded serial peripheral interface (xSPI) | ● 2 channels<br>● Comply with JESD251<br>● Multiple slave up to 2 slaves (channel 0 only)<br>● Protocol mode: 1/4/8pin with SDR/DDR<br>1S-1S-1S, 4S-4D-4D, 8D-8D-8D<br>● Support OctaFlash, OctaRAM, HyperFlash and HyperRAM<br>● Protocol mode: 2/4pin with SDR compatible with QSPI<br>1S-2S-2S, 2S-2S-2S<br>1S-4S-4S, 4S-4S-4S<br>● Configurable address length<br>● Configurable initial access latency cycle<br>● Support XiP mode<br>● Support up to 64 MB address space each CS<br>● Prefetch function for burst-read with low latency<br>● Outstanding buffer for burst-write with high throughput<br>● Manual command configurable up to 4 commands<br>● Output clock/input strobe port timing shift<br>● Automatic command after released reset: up to 4 commands |

Note 1. EtherCAT is a registered trademark of Beckhoff Automation GmbH, Germany.



Downloaded from Arrow.com.

**Table 1.9 Analog**

| Feature | Functional description |
|---|---|
| 12-bit A/D converter (ADC12) | ● 12 bits × 2 units (unit 0: 4 channels, unit 1: 8 channels)<br>● 12-bit resolution<br>● Conversion time<br>0.84 μs per channel<br>● Operating mode<br>Scan mode (single scan mode, continuous scan mode, or 3 group scan mode)<br>Group priority control<br>● Sample-and-hold function<br>Common sample-and-hold circuit included<br>In addition, channel-dedicated sample-and-hold function (3 channels: in unit 0 only) included<br>● Sampling variable<br>Sampling time can be set up for each channel<br>● Double trigger mode (A/D conversion data duplicated)<br>● Three ways to start A/D conversion<br>Software trigger, timer (MTU3, GPT) trigger, external trigger<br>● Event linking by the ELC |
| Temperature sensor unit (TSU) | ● 1 channel<br>● Relative precision: ±1°C (typ) |

**Table 1.10 Hardware accelerator for industrial interfaces**

| Feature | Functional description |
|---|---|
| ΔΣ interface (DSMIF) | ● 3 channels × 2 units<br>● Selectable 2 inputs (U/V) or 3 inputs (U/V/W)<br>● Up to 6 ΔΣ modulators are externally connectable<br>● Sinc filter can be selected as first, second or third order |
| Trigonometric function unit (TFU) | Calculation of sine, cosine, arctangent, hypot_k ( $\sqrt{x^2+y^2}/k$ )<br>● Simultaneous calculation of sine and cosine<br>● Simultaneous calculation of arctangent and hypot_k |

**Table 1.11 Safety (1 of 2)**

| Feature | Functional description |
|---|---|
| Memory protection unit (MPU) | ● Cortex-R52 MPU<br>Two stages MPUs (EL2 and EL1)<br>24 regions each MPU<br>● Master MPU<br>Memory protection for masters except Cortex-R52 (DMAC, USB, Ethernet MAC, CoreSight, SHOSTIF, PHOSTIF) |
| Register write protection function | Protects important registers from being overwritten for in case a program runs out of control. |
| CRC calculator (CRC) | ● 2 channels<br>● CRC code generation for arbitrary amounts of data in 8-, 16-, or 32-bit units<br>● Select any of four generating polynomials:<br>– $X^{32} + X^{26} + X^{23} + X^{22} + X^{16} + X^{12} + X^{11} + X^{10} + X^{8} + X^{7} + X^{5} + X^{4} + X^{2} + X + 1$ (32-Ethernet)<br>– $X^{32} + X^{28} + X^{27} + X^{26} + X^{25} + X^{23} + X^{22} + X^{20} + X^{19} + X^{18} + X^{14} + X^{13} + X^{11} + X^{10} + X^{9} + X^{8} + X^{6} + 1$ (CRC-32C)<br>– $X^{16} + X^{15} + X^{2} + 1$ (CRC-16)<br>– $X^{16} + X^{12} + X^{5} + 1$ (CRC-CCITT)<br>– $X^{8} + X^{2} + X + 1$ (CRC-8) |
| Clock monitor circuit (CLMA) | ● Monitors the abnormal output clock frequency from the PLL circuit or low-speed on-chip oscillator.<br>● Input clock oscillation stop detection: Available |
| Data operation circuit (DOC) | The function to compare, add, or subtract 16-bit data |



Downloaded from Arrow.com.

**Table 1.11 Safety (2 of 2)**

| Feature | Functional description |
|---|---|
| Isolated peripherals | ● Safety dedicated peripherals are available:<br>– GPT: 4 ch<br>– SCI: 1 ch<br>– IIC: 1 ch<br>– SPI: 1 ch<br>– CRC: 1 unit<br>– RTC: 1 unit<br>– GPIO: Sharable with normal GPIO<br>– On-chip system SRAM with ECC<br>● They are mapped independently from normal peripherals so that access protection can be done by EL2 MPU. |

**Table 1.12 Security**

| Feature | Functional description |
|---|---|
| Security*1 | ● Secure boot<br>● JTAG authentication*2<br>● SCI/USB boot disable<br>● Cryptographic accelerators<br>– Symmetric Cipher: AES 128/192/256 bits with CBC/ECB/CTR/GCM/XTS<br>– Asymmetric Cipher: ECC 256 bits, RSA 1024/2048/3072 bits, RSAES-OAEP<br>– Hash: SHA-1, SHA-2<br>– Message authentication: HMAC, CMAC, GMAC<br>– Signature algorithms: ECDSA with NIST P-256, RSASSA-PSS, RSASSA-PKCS1<br>● TRNG |

Note 1. For details, contact our sales representative.
Note 2. Authentication by plaintext is available in non-security support product.

**Table 1.13 Debug**

| Feature | Functional description |
|---|---|
| Debugging interface | ● CoreSight architecture designed by Arm<br>● Debugging function by the JTAG/SWD interface, and trace function by the trace port interface |

**Table 1.14 External host interface**

| Feature | Functional description |
|---|---|
| Serial host interface (SHOSTIF) | ● Serial communication is possible in slave mode.<br>● Supported interface<br>– Motorola Serial Peripheral Interface (4-wire SPI)<br>– Enhanced SPI Modes with Dual, Quad, or Octal SPI<br>● Serial clock polarity switching<br>● Serial clock phase switching<br>● Single Data Transfer<br>● Data size is up to 32 bits × 64 burst |
| Parallel host interface (PHOSTIF) | ● Synchronous/Asynchronous SRAM Interface Mode<br>● Synchronous Burst SRAM Type Transfer Mode<br>● Bus width: 8 or 16 bits<br>● Synchronous relations<br>– HCKIO synchronous<br>● Write buffer<br>● Read buffer<br>● Multiplexing of addresses and data (Synchronous Burst SRAM Type only) |
| Mailbox and semaphore (MBXSEM) | ● Eight semaphores<br>● Four 32-bit mailboxes for both external host CPU to Cortex-R52 and Cortex-R52 to external host CPU<br>● Interrupts can be generated and cleared from both external host CPU and Cortex-R52 |



Downloaded from Arrow.com.

**Table 1.15 Others**

| Feature | Functional description |
|---|---|
| Power supply voltage | VDD = 1.1 V (Core)<br>VCC18 = 1.8 V (PLL, USB, ADC, TSU)<br>VCC33 = 3.3 V (I/O, USB)<br>VCC1833 = 1.8 V (RGMII, xSPI) or 3.3 V (RMII/MII, xSPI[*1]) |
| Operating temperature | Tj = −40 to +125°C |
| Packages | 225 pin FBGA 13 × 13 mm, 0.8-mm pitch<br>121 pin FBGA 10 × 10 mm, 0.8-mm pitch |

Note 1. Maximum xSPI clock frequency is 75 MHz at 3.3 V.



Downloaded from Arrow.com.

## 1.2 Function Comparison

**Table 1.16 Comparison of Functions for Different Packages**

| Module/Function | | 225-pin FBGA | 121-pin FBGA |
|---|---|---|---|
| CPU | ARM Cortex-R52 | Single | |
| External bus | External bus width | 8, 16 bits | Not supported |
| Interrupt | External interrupt | NMI, IRQ0 to IRQ15 | NMI, IRQ0 to IRQ3, IRQ5 to IRQ8, IRQ11 to IRQ13 |
| DMA | DMA controller (DMAC) | 2 units (DMAC0: 8 channels, DMAC1: 8 channels) | |
| Timer | Multi-function timer pulse unit 3 (MTU3) | 9 channels | 9 channels*1 |
| | General PWM timer (GPT) | 18 channels | 18 channels*1 |
| | Compare match timer (CMT) | 6 channels | |
| | Compare match timer W (CMTW) | 2 channels | 2 channels*1 |
| | Watchdog timer | 1 channel | |
| | Port output enable 3 (POE3) | Available | Available*1 |
| | Port output enable for GPT (POEG) | Available | Available*1 |
| | Real time clock (RTC) | Available | |
| Communication function | Ethernet MAC (GMAC) | 1 port | |
| | Ethernet switch (ETHSW) | 3 ports (PHY interface) | 2 ports (PHY interface) |
| | EtherCAT slave controller (ESC) | 3 ports | 2 ports |
| | USB 2.0 HS host/function module (USB) | 1 port | Not supported |
| | Serial communication interface (SCI) | 6 channels | 5 channels*1 |
| | I2C bus interface (IIC) | 3 channels | 3 channels |
| | CANFD module (CANFD) | 2 channels | 2 channels*1 |
| | Serial peripheral interface (SPI) | 4 channels | 2 channels*1 |
| | Expanded serial peripheral interface (xSPI) | 2 channels (1.8 V or 3.3 V) | 1 channel*1 (3.3 V) |
| ΔΣ interface (DSMIF) | | 2 units (DSMIF0: 3 channels, DSMIF1: 3 channels) | 2 units (DSMIF0: 2 channels, DSMIF1: 2 channels) |
| Trigonometric function unit (TFU) | | Available | |
| 12-bit A/D converter (ADC12) | | 2 units (ADC120: 4 channels, ADC121: 8 channels) | Not supported |
| Temperature sensor unit (TSU) | | Available | |
| CRC calculator (CRC) | | 2 channels | |
| Clock monitor circuit (CLMA) | | Available | |
| Data operation circuit (DOC) | | Available | |
| Security*3 | | Optional | |
| One-time programmable memory (OTP) | | Available | |
| External host interface | Serial host interface (SHOSTIF) | 1 channel | 1 channel*2 |
| | Parallel host interface (PHOSTIF) | 1 channel | Not supported |
| | Mailbox and Semaphore (MBXSEM) | Available | |
| Event link controller (ELC) | | Available | |

Note 1. A part of external signals are not available.
Note 2. Up to quad connection
Note 3. For details, contact our sales representative.



Downloaded from Arrow.com.

## 1.3 Product Lineup

**Table 1.17 Product Lineup**

| Group | Part Number | Package | Security |
|---|---|---|---|
| RZ/N2L | R9A07G084M08GBG | 225 pin FBGA | Available |
| | R9A07G084M04GBG | 225 pin FBGA | Not available |
| | R9A07G084M08GBA | 121 pin FBGA | Available |
| | R9A07G084M04GBA | 121 pin FBGA | Not available |



Downloaded from Arrow.com.

## 1.4 Block Diagram

Figure 1.1 shows a block diagram of the 225-pin device.

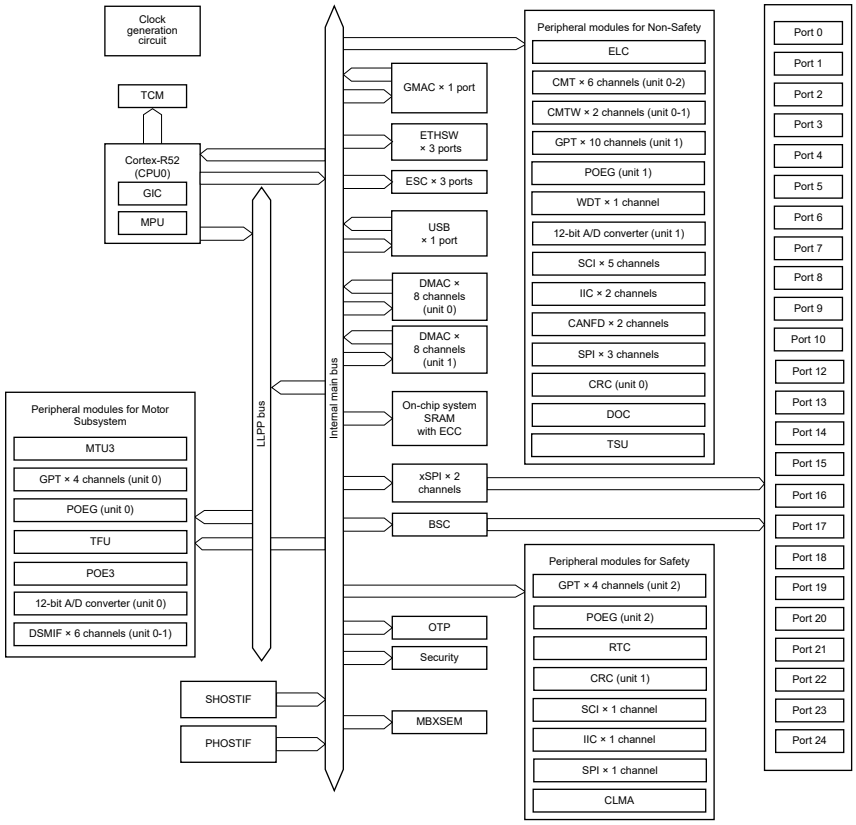


| | | | |
|---|---|---|---|
| GMAC | : Ethernet MAC | GPT | : General PWM timer |
| ETHSW | : Ethernet switch | CMT | : Compare match timer |
| ESC | : EtherCAT slave controller | CMTW | : Compare match timer W |
| DMAC | : DMA controller | POE3 | : Port output enable 3 |
| BSC | : Bus state controller | POEG | : Port output enable for GPT |
| xSPI | : Expanded serial peripheral interface | RTC | : Real time clock |
| WDT | : Watchdog timer | IIC | : $I^2C$ bus interface |
| SCI | : Serial communication interface | CANFD | : CANFD module |
| SPI | : Serial peripheral interface | DSMIF | : ΔΣ interface |
| USB | : USB 2.0 HS host/function module | TFU | : Trigonometric function unit |
| GIC | : Generic interrupt controller | CRC | : CRC (cyclic redundancy check) calculator |
| MPU | : Memory protection unit | CLMA | : Clock monitor circuit |
| ELC | : Event link controller | DOC | : Data operation circuit |
| MTU3 | : Multi-function timer pulse unit 3 | TSU | : Temperature sensor unit |
| SHOSTIF | : Serial host interface | PHOSTIF | : Parallel host interface |
| MBXSEM | : Mailbox and Semaphore | OTP | : One-time programmable memory |

**Figure 1.1 Block diagram of a 225-pin device**



Downloaded from Arrow.com.

## 1.5 Pin Functions

Table 1.18 lists the pin functions.

**Table 1.18 Pin functions (1 of 7)**

| Classification | Pin name | I/O | Description |
|---|---|---|---|
| Power supply | VDD | Input | Power supply pin. Connect this pin to the system power supply. |
| | VSS | Input | Ground pin. Connect this pin to the system power supply (0 V). |
| | VCC1833_0<br>VCC1833_1<br>VCC1833_2<br>VCC1833_3<br>VCC1833_4 | Input | Power supply pin for each I/O domains. (1.8 V or 3.3 V) This pin is available for BGA package product only. |
| | VCC33 | Input | Power supply pin for I/O pins. |
| | VCC18_PLL0, VCC18_PLL1 | Input | Power supply pins for the on-chip PLL oscillator |
| | AVCC18_TSU | Input | Power supply pin for the temperature sensor unit |
| Clock | XTAL | Output | Connected to a crystal resonator. When external clock signal is used, EXTAL pin should be driven low. XTAL pin should never be driven or loaded by anything other than crystal oscillator. The voltage level of EXTAL must not exceed core VDD (1.16 V). |
| | EXTAL | Input | |
| | EXTCLKIN | Input | Inputs the external clock. When a crystal resonator is connected, it should be driven low. |
| | CKIO | Output | Outputs the external bus clock for external devices. |
| | ETH0_REFCLK | Output | Outputs 25 MHz clock for EtherPHY 0 |
| | ETH1_REFCLK | Output | Outputs 25 MHz clock for EtherPHY 1 |
| | ETH2_REFCLK | Output | Outputs 25 MHz clock for EtherPHY 2 |
| | RMII0_REFCLK | Output | Outputs 50 MHz clock for RMII0 |
| | RMII1_REFCLK | Output | Outputs 50 MHz clock for RMII1 |
| | RMII2_REFCLK | Output | Outputs 50 MHz clock for RMII2 |
| Operating mode control | MDX | Input | This signal should be driven low. |
| | MD0 to MD2 | Input | Input the operating mode select signal. The signal level on these pins must not be changed during operation mode transition on release from the reset state. |
| | MDV0 to MDV4 | Input | Input the operating voltage select signal. The signal level on these pins must not be changed during operation mode transition on release from the reset state. |
| | MDD | Input | Input the enabling JTAG authentication by hash signal. The signal level on this pin must not be changed during operation mode transition on release from the reset state. |
| System control | RES# | Input | Inputs the reset signal. This MPU enters the reset state when this signal goes low. |
| | BSCANP | Input | Inputs the boundary scan enable signal. Boundary scan is enabled when this pin goes high. When boundary scan is not used, this pin should be driven low. |
| | RSTOUT# | Output | Outputs the reset signal externally |



Downloaded from Arrow.com.

**Table 1.18 Pin functions (2 of 7)**

| Classification | Pin name | I/O | Description |
|---|---|---|---|
| Debugging interface | TRST# | Input | Test reset pin for the on-chip emulator |
| | TMS | I/O | Test mode select pin for the on-chip emulator<br>Functions as the SWDIO pin in serial wire debug (SWD) mode |
| | TDI | Input | Test data input pin for the on-chip emulator |
| | TDO | Output | Test data output pin for the on-chip emulator |
| | TCK | Input | Test clock pin for the on-chip emulator<br>Functions as the SWCLK pin in serial wire debug (SWD) mode |
| | TRACECLK | Output | Outputs the clock for synchronization with trace data |
| | TRACECTL | Output | Outputs the enable signal for trace control |
| | TRACEDATA0 to TRACEDATA7 | Output | Output trace data |
| Bus state controller (BSC) | A25 to A0 | Output | Output the address |
| | D15 to D0 | I/O | Input and output the data |
| | CS0#, CS2#, CS3#, CS5# | Output | Output the chip select signal for the external memory or device. |
| | RD# | Output | Outputs the strobe signal which indicates a read is in progress. |
| | RD/WR# | Output | Outputs the strobe signal which indicates a read or write access |
| | BS# | Output | Outputs the status signal which indicates the start of the bus cycle |
| | AH# | Output | Outputs the address hold signal for the device that uses the multiplexed I/O interface |
| | WAIT# | Input | Inputs the external wait control signal which inserts a wait cycle into the bus cycle |
| | WE0# | Output | Outputs the write strobe signal to D7 to D0 |
| | WE1# | Output | Outputs the write strobe signal to D15 to D8 |
| | DQMLL | Output | Outputs the data mask enable signal to D7 to D0 when SDRAM is connected |
| | DQMLU | Output | Outputs the data mask enable signal to D15 to D8 when SDRAM is connected |
| | RAS# | Output | Outputs the row-address strobe signal to the SDRAM. This pin should be connected to the RAS# pin on the SDRAM. |
| | CAS# | Output | Outputs the column-address strobe signal to the SDRAM. This pin should be connected to the CAS# pin on the SDRAM. |
| | CKE | Output | Outputs the clock enable signal to the SDRAM. This pin should be connected to the CKE pin on the SDRAM. |
| Direct memory access controller (DMAC) | DREQ | Input | Inputs the DMA transfer request signal from the external device |
| | DACK | Output | Outputs the acknowledge signal which indicates acceptance of the DMA transfer request from the external device |
| | TEND | Output | Outputs the DMA transfer end signal |
| Interrupt | NMI | Input | Inputs the non-maskable interrupt request signal |
| | IRQ0 to IRQ15 | Input | Input the external interrupt request signal |



Downloaded from Arrow.com.

**Table 1.18 Pin functions (3 of 7)**

| Classification | Pin name | I/O | Description |
|---|---|---|---|
| Multi-function timer pulse unit 3 (MTU3) | MTIOC0A, MTIOC0B, MTIOC0C, MTIOC0D | I/O | TGRA0 to TGRD0 input capture input, output compare output, and PWM output pins |
| | MTIOC1A, MTIOC1B | I/O | TGRA1 and TGRB1 input capture input, output compare output, and PWM output pins |
| | MTIOC2A, MTIOC2B | I/O | TGRA2 and TGRB2 input capture input, output compare output, and PWM output pins |
| | MTIOC3A, MTIOC3B, MTIOC3C, MTIOC3D | I/O | TGRA3 to TGRD3 input capture input, output compare output, and PWM output pins |
| | MTIOC4A, MTIOC4B, MTIOC4C, MTIOC4D | I/O | TGRA4 to TGRD4 input capture input, output compare output, and PWM output pins |
| | MTIC5U, MTIC5V, MTIC5W | Input | TGRU5, TGRV5, and TGRW5 input capture input and dead time compensation input pins |
| | MTIOC6A, MTIOC6B, MTIOC6C, MTIOC6D | I/O | TGRA6 to TGRD6 input capture input/output compare output/PWM output pins |
| | MTIOC7A, MTIOC7B, MTIOC7C, MTIOC7D | I/O | TGRA7 to TGRD7 input capture input/output compare output/PWM output pins |
| | MTIOC8A, MTIOC8B, MTIOC8C, MTIOC8D | I/O | TGRA8 to TGRD8 input capture input/output compare output/PWM output pins |
| | MTCLKA, MTCLKB, MTCLKC, MTCLKD | Input | External clock input pins for MTU3 |
| Port output enable 3 (POE3) | POE0#, POE4#, POE8#, POE10#, POE11# | Input | Input the request signal to place the MTU3 in the high-impedance state |
| General PWM timer (GPT)/ Port output enable for GPT (POEG) | GTETRGA, GTETRGB, GTETRGC, GTETRGD | Input | External trigger input and output-disable request input pins |
| | GTETRGSA, GTETRGSB | Input | External trigger input and output-disable request input pins (SAFETY) |
| | GTIOC0A to GTIOC17A, GTIOC0B to GTIOC17B | I/O | Input capture input/output compare output/PWM output pins |
| | GTADSML0, GTADSML1, GTADSMP0, GTADSMP1 | Output | Output pins for monitoring A/D conversion start requests |
| Compare match timer W (CMTW) | CMTW0_TIC0, CMTW0_TIC1, CMTW1_TIC0, CMTW1_TIC1 | Input | CMTW input capture input pins |
| | CMTW0_TOC0, CMTW0_TOC1, CMTW1_TOC0, CMTW1_TOC1 | Output | CMTW output compare output pins |
| Real time clock (RTC) | RTCAT1HZ | Output | RTC 1 Hz output pin |



Downloaded from Arrow.com.

**Table 1.18 Pin functions (4 of 7)**

| Classification | Pin name | I/O | Description |
|---|---|---|---|
| Serial communication interface (SCI) | SCK0 to SCK5 | I/O | Clock I/O pins (clock synchronous mode/simple SPI mode/smart card mode) |
| | RXD0 to RXD5 | Input | Input the receive data (asynchronous mode/clock synchronous mode/smart card mode) |
| | TXD0 to TXD5 | Output | Output the transmit data (asynchronous mode/clock synchronous mode/smart card mode) |
| | CTS0# to CTS5# | Input | Input the start of transmission (asynchronous mode/ clock synchronous mode) active-low |
| | RTS0# to RTS5# | Output | Output the reception (asynchronous mode/clock synchronous mode) active-low |
| | SCL0 to SCL5 | I/O | Input/output the I2C clocks (simple I2C mode) |
| | SDA0 to SDA5 | I/O | Input/output the I2C data (simple I2C mode) |
| | MISO0 to MISO5 | I/O | Input/output the data for slave transmission (simple SPI mode) |
| | MOSI0 to MOSI5 | I/O | Input/output the data for master transmission (simple SPI mode) |
| | SS0# to SS5# | Input | Chip-select input pins (simple SPI mode) active-low |
| | DE0 to DE5 | Output | Driver enable output pins (asynchronous mode) |
| I2C bus interface (IIC) | IIC_SCL0 to IIC_SCL2 | I/O | Clock I/O pins |
| | IIC_SDA0 to IIC_SDA2 | I/O | Data I/O pins |
| Ethernet | ETH0_TXCLK to ETH2_TXCLK | I/O | TX clock input pins (MII mode)<br>TX clock output pins (RGMII mode) |
| | ETH0_TXD0 to ETH2_TXD0 | Output | TX data 0 pins (RGMII, RMII, and MII modes) |
| | ETH0_TXD1 to ETH2_TXD1 | Output | TX data 1 pins (RGMII, RMII, and MII modes) |
| | ETH0_TXD2 to ETH2_TXD2 | Output | TX data 2 pins (RGMII and MII modes) |
| | ETH0_TXD3 to ETH2_TXD3 | Output | TX data 3 pins (RGMII and MII modes) |
| | ETH0_TXEN to ETH2_TXEN | Output | TX data enable pins (RMII and MII modes)<br>TX data enable/TX data error (TX_CTL) pins (RGMII mode) |
| | ETH0_TXER to ETH2_TXER | Output | TX data error pins (MII mode) |
| | ETH0_RXCLK to ETH2_RXCLK | Input | RX clock pins (RGMII, RMII, and MII modes) |
| | ETH0_RXD0 to ETH2_RXD0 | Input | RX data 0 pins (RGMII, RMII, and MII modes) |
| | ETH0_RXD1 to ETH2_RXD1 | Input | RX data 1 pins (RGMII, RMII, and MII modes) |
| | ETH0_RXD2 to ETH2_RXD2 | Input | RX data 2 pins (RGMII and MII modes) |
| | ETH0_RXD3 to ETH2_RXD3 | Input | RX data 3 pins (RGMII and MII modes) |
| | ETH0_RXDV to ETH2_RXDV | Input | RX data valid pins (MII mode)<br>Carrier sense/RX data valid (CRS_DV) pins (RMII mode)<br>RX data valid/RX error (RX_CTL) pins (RGMII mode) |
| | ETH0_RXER to ETH2_RXER | Input | RX data error pins (RMII and MII modes) |
| | ETH0_CRS to ETH2_CRS | Input | Carrier sense pins (MII mode) |
| | ETH0_COL to ETH2_COL | Input | Collision detection pins (MII mode) |
| Ethernet MAC (GMAC) | GMAC_PTPTRG0 | Input | PTP timer trigger external input 0 |
| | GMAC_PTPTRG1 | Input | PTP timer trigger external input 1 |
| | GMAC_MDC | Output | Management data clock output pin |
| | GMAC_MDIO | I/O | Management data I/O pin |



Downloaded from Arrow.com.

**Table 1.18 Pin functions (5 of 7)**

| Classification | Pin name | I/O | Description |
|---|---|---|---|
| Ethernet switch (ETHSW) | ETHSW_LPI0 | Output | Port 0 MAC status indicates that it is currently receiving low-power-idle sequences from the PHY |
| | ETHSW_LPI1 | Output | Port 1 MAC status indicates that it is currently receiving low-power-idle sequences from the PHY |
| | ETHSW_LPI2 | Output | Port 2 MAC status indicates that it is currently receiving low-power-idle sequences from the PHY |
| | ETHSW_PTPOUT0 to ETHSW_PTPOUT3 | Output | Ethernet switch timer pulse output pins |
| | ETHSW_TDMAOUT0 to ETHSW_TDMAOUT3 | Output | Ethernet switch TDMA timer output pins |
| | ETHSW_PHYLINK0 to ETHSW_PHYLINK2 | Input | Ethernet switch PHY link status input pins |
| | ETHSW_MDC | Output | Management data clock output pin |
| | ETHSW_MDIO | I/O | Management data I/O pin |
| EtherCAT slave controller (ESC) | ESC_LEDRUN | Output | Outputs the EtherCAT RUN LED signal |
| | ESC_IRQ | Output | Outputs the EtherCAT IRQ signal |
| | ESC_LEDSTER | Output | Outputs the EtherCAT Dual-color state LED signal |
| | ESC_LEDERR | Output | Outputs the EtherCAT error LED signal |
| | ESC_LINKACT0 to ESC_LINKACT2 | Output | Output the EtherCAT link/activity LED signal |
| | ESC_SYNC0, ESC_SYNC1 | Output | Output the EtherCAT SYNC signal |
| | ESC_LATCH0, ESC_LATCH1 | Input | Input the EtherCAT LATCH signal |
| | ESC_RESETOUT# | Output | Output the EtherCAT reset signal |
| | ESC_I2CCLK | Output | Outputs the EtherCAT EEPROM I2C clock signal |
| | ESC_I2CDATA | I/O | Inputs and outputs the EtherCAT EEPROM I2C data signal |
| | ESC_PHYLINK0 to ESC_PHYLINK2 | Input | Inputs the EtherCAT PHY link status signal. |
| | ESC_MDC | Output | Management data clock output pin |
| | ESC_MDIO | I/O | Management data I/O pin |
| USB 2.0 host/function module | VCC33_USB | Input | Power supply input pin for USB |
| | VCC18_USB | Input | Power supply input pin for USB |
| | VSS_USB | Input | Ground input pins for USB |
| | AVCC18_USB | Input | Analog power supply input pin for USB |
| | USB_RREF | Input | Reference current input pin for USB. Connect this pin to the VSS_USB pin with 1.8 kΩ (±1%). |
| | USB_DP | I/O | USB bus D+ data I/O pin |
| | USB_DM | I/O | USB bus D- data I/O pin |
| | USB_VBUSEN | Output | Outputs the VBUS power enable signal for USB |
| | USB_OVRCUR | Input | Inputs the overcurrent signal for USB |
| | USB_VBUSIN | Input | USB cable connection/disconnection detection input pin |
| | USB_EXICEN | Output | OTG power supply IC control pin |
| | USB_OTGID | Input | OTG ID pin |



Downloaded from Arrow.com.

**Table 1.18 Pin functions (6 of 7)**

| Classification | Pin name | I/O | Description |
|---|---|---|---|
| CANFD module (CANFD) | CANRX0, CANRX1 | Input | Receive data input pins |
| | CANTX0, CANTX1 | Output | Transmit data output pins |
| | CANRXDP0, CANRXDP1 | Output | Receive data phase output pins |
| | CANTXDP0, CANTXDP1 | Output | Transmit data phase output pins |
| Serial peripheral interface (SPI) | SPI_RSPCK0 to SPI_RSPCK3 | I/O | Clock I/O pins |
| | SPI_MOSI0 to SPI_MOSI3 | I/O | Master transmit data I/O pins |
| | SPI_MISO0 to SPI_MISO3 | I/O | Slave transmit data I/O pins |
| | SPI_SSL00 to SPI_SSL30 | I/O | Slave select signal I/O pins |
| | SPI_SSL01 to SPI_SSL31,<br>SPI_SSL02 to SPI_SSL32,<br>SPI_SSL13 to SPI_SSL33 | Output | Slave select signal output pins |
| Expanded serial peripheral interface (xSPI) | XSPI0_CKP, XSPI1_CKP,<br>XSPI0_CKN | Output | Clock output pins |
| | XSPI0_CS0#, XSPI1_CS0#,<br>XSPI0_CS1# | Output | Chip select output pins |
| | XSPI0_DS, XSPI1_DS | I/O | Read data strobe/write data mask input/output pin |
| | XSPI0_IO0 to XSPI0_IO7,<br>XSPI1_IO0 to XSPI1_IO7 | I/O | Data0 to Data7 input/output pins |
| | XSPI0_RESET0#, XSPI0_RESET1# | Output | Master reset status output pins |
| | XSPI0_RSTO0#, XSPI0_RSTO1# | Input | Slave reset status input pins |
| | XSPI0_INT0#, XSPI0_INT1# | Input | Interrupt input pins |
| | XSPI0_ECS0#, XSPI0_ECS1# | Input | Error correction status input pins |
| | XSPI0_WP0#, XSPI0_WP1# | Output | Write protect output pins |
| ΔΣ interface (DSMIF) | MCLK0 to MCLK5 | I/O | Clock I/O pins |
| | MDAT0 to MDAT5 | Input | Data input pins |
| 12-bit A/D converter (ADC12) | AN000 to AN003,<br>AN100 to AN107 | Input | Analog input pins for the A/D converter |
| | ADTRG0#, ADTRG1# | Input | External trigger input pins for the start of A/D conversion |
| Serial host interface (SHOSTIF) | HSPI_CK | Input | Clock input pin |
| | HSPI_CS# | Input | Chip select input pin |
| | HSPI_IO0 to HSPI_IO7 | I/O | Data0 to Data7 input/output pins |
| | HSPI_INT# | Output | Interrupt output pin |



Downloaded from Arrow.com.

**Table 1.18 Pin functions (7 of 7)**

| Classification | Pin name | I/O | Description |
|---|---|---|---|
| Parallel host interface (PHOSTIF) | HCKIO | Input | Bus clock input pin |
| | HA0 to HA20 | Input | Address input pins |
| | HD0 to HD15 | I/O | Data I/O pins |
| | HCS0# | Input | Chip select input pin supporting burst transfer |
| | HCS1# | Input | Chip select input pin supporting BSC ADMUX mode |
| | HRD# | Input | Strobe input pin indicating a read access |
| | HWAIT# | Output | Output pin indicating that the bus cycle is in wait state |
| | HWRSTB# | Input | Strobe input pin indicating a write access |
| | HWR0# | Input | Write strobe/byte enable input pin to HD7 to HD0 |
| | HWR1# | Input | Write strobe/byte enable input pin to HD15 to HD8 |
| | HERROUT# | Output | Outputs the bus access error interrupt signal |
| | HBS# | Input | Bus cycle input pin |
| Mailbox and Semaphore (MBXSEM) | MBX_HINT# | Output | Mailbox (Cortex-R52 to Host CPU) interrupt output pin |
| Analog power supply | VCC18_ADC0, VCC18_ADC1 | Input | Analog power supply input pin for the 12-bit A/D converter. Connect this pin to the 1.8 V power supply if the 12-bit A/D converter is not to be used. |
| | VREFH0, VREFH1 | Input | Reference voltage input pin for the 12-bit A/D converter. Connect this pin to the 1.8 V power supply if the 12-bit A/D converter is not to be used. |
| I/O ports | P00_0 to P24_2 | I/O | General-purpose input/output pins |



Downloaded from Arrow.com.

## 1.6 FBGA 225 Pin Assignments

| | 1 | 2 | 3 | 4 | 5 | 6 | 7 | 8 | 9 | 10 | 11 | 12 | 13 | 14 | 15 | |
|---|---|---|---|---|---|---|---|---|---|---|---|---|---|---|---|---|
| A | VSS | P01_0 | P00_2 | P00_4 | P24_0 | P22_1 | P22_0 | P21_3 | P20_4 | VSS | AN106 | AN104 | AN103 | AN101 | VSS | A |
| B | P01_5 | P01_2 | P00_3 | P00_5 | P24_1 | P22_3 | P21_7 | P21_1 | P20_1 | AN105 | AN102 | AN100 | AN000 | AN002 | P19_0 | B |
| C | P01_7 | P01_3 | P00_6 | P00_0 | P24_2 | P22_2 | P21_5 | P21_2 | AN107 | VREFH1 | VREFH0 | AN001 | AN003 | AVCC18_TSU | P18_6 | C |
| D | P02_1 | P01_6 | P01_1 | P00_7 | P00_1 | P23_7 | P21_6 | P20_2 | P20_3 | VSS | VSS | VSS | P18_5 | P18_2 | P18_1 | D |
| E | P02_3 | TRST# | P02_0 | P01_4 | VCC1833_2 | VCC33 | P21_4 | VCC33 | VCC18_ADC1 | VSS | VCC18_ADC0 | P18_4 | P18_3 | P18_0 | P17_7 | E |
| F | P02_7 | P02_5 | P02_2 | P02_4 | P02_6 | VDD | VSS | VDD | VDD | VDD | VCC1833_4 | P17_0 | P17_4 | P17_3 | P17_5 | F |
| G | P03_5 | BSCANP | P03_0 | P03_6 | P03_7 | VDD | VSS | VSS | VSS | VDD | P16_6 | P16_3 | P16_0 | P16_7 | P17_6 | G |
| H | P04_0 | P04_1 | P04_5 | P04_4 | P04_6 | VDD | VSS | VSS | VSS | VDD | P16_1 | P15_6 | P15_4 | P16_2 | P16_5 | H |
| J | P04_7 | P05_1 | P05_3 | P05_2 | P05_0 | VDD | VSS | VSS | VSS | VDD | VCC1833_3 | P14_5 | P14_4 | P15_5 | P15_7 | J |
| K | P05_4 | P05_5 | P05_6 | P06_3 | VCC1833_1 | VDD | VDD | VDD | VSS | VDD | P15_3 | P14_2 | P14_6 | P15_1 | P15_2 | K |
| L | VSS | P06_0 | P06_1 | P06_6 | VCC33 | VCC1833_0 | P09_7 | P10_2 | P10_3 | P13_2 | P15_0 | P13_4 | P14_0 | P14_1 | VSS | L |
| M | P05_7 | P06_2 | P06_7 | P07_3 | P08_6 | P09_4 | P09_6 | P10_1 | P10_4 | VCC33 | P13_7 | P13_5 | P13_6 | P14_3 | P14_7 | M |
| N | P06_4 | P06_5 | P07_1 | P08_4 | P08_7 | P09_2 | P09_5 | P10_0 | VCC18_PLL1 | VSS | P12_4 | P13_3 | VSS_USB | VSS | VSS_USB | N |
| P | P07_0 | P07_2 | P08_5 | P09_0 | MDX | RES# | VDD | VSS | VCC18_PLL0 | AVCC18_USB | VCC18_USB | VSS_USB | USB_DM | VSS_USB | USB_RREF | P |
| R | VSS | P07_4 | P09_1 | P09_3 | VSS | EXT CLKIN | EXTAL | XTAL | VSS | AVCC18_USB | VCC33_USB | VSS_USB | USB_DP | VSS_USB | VSS | R |
| | 1 | 2 | 3 | 4 | 5 | 6 | 7 | 8 | 9 | 10 | 11 | 12 | 13 | 14 | 15 | |

**Figure 1.2 Pin arrangement (225-pin FBGA) (top view)**

**Table 1.19 List of pins and pin functions (225-pin FBGA) (1 of 8)**

| Pin number | I/O power domain | Power supply clock system control | I/O port | Bus, DMAC | Timer (MTU3, POEG, GPT / POE3, CMTW, RTC) | Communication (xSPI, GMAC, ETHSW, ESC, SCI, SPI, IIC, CANFD, USB) | Others (DSMIF, Mailbox) | Interrupt | ADC12 | Host interface (SHOSTIF, PHOSTIF) |
|---|---|---|---|---|---|---|---|---|---|---|
| A1 | — | VSS | — | — | — | — | — | — | — | — |
| A2 | VCC1833_2 | — | P01_0 | CAS# | MTIOC4C / GTIOC3A | GMAC_MDIO / ETHSW_MDIO / ESC_MDIO / CTS2# | MCLK1 | — | — | — |
| A3 | VCC1833_2 | — | P00_2 | RD# | MTIC5V | ETH2_TXEN / TXD2 / SDA2 / MOSI2 / USB_OVRCUR | — | — | — | — |
| A4 | VCC1833_2 | — | P00_4 | WAIT# | MTIOC3A / GTIOC0A | ETH2_RXER | MCLK0 | IRQ13 | — | HWAIT# |
| A5 | VCC1833_2 | — | P24_0 | D12 / CKE / DREQ | MTIOC0B / GTETRGB | ETH2_RXD1 / RXD1 / SCL1 / MISO1 | MDAT4 | — | — | HD12 |
| A6 | — | TRACECTL | P22_1 | D8 | GTETRGB / POE4# | ESC_LINKACT2 / SS4# / CTS4# / RTS4# | — | — | — | HD8 |
| A7 | — | TRACEDATA7 | P22_0 | D7 | MTIOC7D / GTIOC17B | DE5 | MDAT3 | IRQ15 | — | HD7 |
| A8 | — | TRACEDATA2 | P21_3 | D2 | MTIOC6C / GTIOC15A | TXD5 / SDA5 / MOSI5 / SPI_SSL33 | MCLK1 | — | — | HD2 |
| A9 | — | MDV3 | P20_4 | — | — | ETHSW_TDMAOUT3 / ETHSW_PTPOUT0 / ESC_LINKACT1 | — | — | — | — |
| A10 | — | VSS | — | — | — | — | — | — | — | — |
| A11 | — | — | — | — | — | — | — | — | AN106 | — |
| A12 | — | — | — | — | — | — | — | — | AN104 | — |
| A13 | — | — | — | — | — | — | — | — | AN103 | — |



Downloaded from Arrow.com.

**Table 1.19 List of pins and pin functions (225-pin FBGA) (2 of 8)**

| Pin number | I/O power domain | Power supply clock system control | I/O port | Bus, DMAC | Timer (MTU3, POEG, GPT / POE3, CMTW, RTC) | Communication (xSPI, GMAC, ETHSW, ESC, SCI, SPI, IIC, CANFD, USB) | Others (DSMIF, Mailbox) | Interrupt | ADC12 | Host interface (SHOSTIF, PHOSTIF) |
|---|---|---|---|---|---|---|---|---|---|---|
| A14 | — | — | — | — | — | — | — | — | AN101 | — |
| A15 | — | VSS | — | — | — | — | — | — | — | — |
| B1 | VCC1833_2 | — | P01_5 | WE0# / DQMLL | — | ETH2_TXD0 | — | — | — | — |
| B2 | VCC1833_2 | — | P01_2 | CS2# | MTIOC4B / GTIOC2B | ETH2_TXD3 | — | IRQ2 | — | — |
| B3 | VCC1833_2 | — | P00_3 | RD/WR# | MTIC5W | ETH2_REFCLK / RMII2_REFCLK / SS2# / CTS2# / RTS2# | — | IRQ1 | — | — |
| B4 | VCC1833_2 | — | P00_5 | CS0# | MTIOC3C / GTIOC0B | ETHSW_PHYLINK2 / ETHSW_PHYLINK0 / ESC_PHYLINK2 / ESC_PHYLINK0 | MDAT0 | — | — | — |
| B5 | VCC1833_2 | — | P24_1 | D13 / CAS# | MTIOC0C / GTETRGC / POE8# | ETH2_RXCLK | MCLK5 | — | — | HD13 |
| B6 | — | — | P22_3 | D10 | MTIOC8D / GTETRGSB | RXD5 / SCL5 / MISO5 | — | — | — | HD10 |
| B7 | — | TRACEDATA6 | P21_7 | D6 / DREQ | MTIOC7C / GTIOC17A | DE0 | MCLK3 | IRQ10 | — | HD6 |
| B8 | — | TRACEDATA0 | P21_1 | D0 | MTIOC6A / GTIOC14A / CMTW0_TIC0 | ESC_SYNC0 / ESC_SYNC1 / SCK5 / SPI_SSL20 / IIC_SCL1 | MCLK0 | — | — | HSPI_INT# / HD0 |
| B9 | — | MDV0 | P20_1 | — | — | ETHSW_TDMAOUT0 / ETHSW_PTPOUT3 / ESC_LINKACT0 | — | — | — | — |
| B10 | — | — | — | — | — | — | — | — | AN105 | — |
| B11 | — | — | — | — | — | — | — | — | AN102 | — |
| B12 | — | — | — | — | — | — | — | — | AN100 | — |
| B13 | — | — | — | — | — | — | — | — | AN000 | — |
| B14 | — | — | — | — | — | — | — | — | AN002 | — |
| B15 | VCC1833_4 | MDV4 | P19_0 | — | — | USB_VBUSEN | — | — | — | — |
| C1 | — | TRACEDATA1 | P01_7 | A19 | MTIOC1B / GTIOC9B | ETHSW_LPI1 / SCK1 / SPI_RSPCK3 / CANRX0 | — | — | ADTRG0# | HA19 |
| C2 | VCC1833_2 | — | P01_3 | AH# | MTIOC4D / GTIOC3B | ETH2_TXD2 | — | — | — | — |
| C3 | VCC1833_2 | — | P00_6 | CS5# | MTIOC3B / GTIOC1A | ETH2_TXCLK | — | — | — | — |
| C4 | VCC1833_2 | — | P00_0 | D15 | — | ETH2_RXD3 / SCK2 / DE2 | — | — | — | HD15 |
| C5 | VCC1833_2 | — | P24_2 | D14 / RAS# | MTIOC0D / GTETRGD | ETH2_RXD2 / TXD1 / SDA1 / MOSI1 | MDAT5 | — | — | HD14 |
| C6 | — | TRACECLK | P22_2 | D9 | MTIOC8C / GTETRGSA | SPI_SSL12 | MCLK1 | IRQ4 | — | HD9 |
| C7 | — | TRACEDATA4 | P21_5 | D4 | MTIOC7A / GTIOC16A / CMTW1_TOC1 | CTS5# / SPI_MISO0 | MCLK2 | IRQ6 | ADTRG1# | HD4 |
| C8 | — | TRACEDATA1 | P21_2 | D1 | MTIOC6B / GTIOC14B / CMTW0_TIC1 | ESC_SYNC0 / ESC_SYNC1 / RXD5 / SCL5 / MISO5 / SPI_MISO2 / IIC_SDA1 | MDAT0 | — | — | HD1 |
| C9 | — | — | — | — | — | — | — | — | AN107 | — |
| C10 | — | VREFH1 | — | — | — | — | — | — | — | — |
| C11 | — | VREFH0 | — | — | — | — | — | — | — | — |
| C12 | — | — | — | — | — | — | — | — | AN001 | — |
| C13 | — | — | — | — | — | — | — | — | AN003 | — |
| C14 | — | AVCC18_TSU | — | — | — | — | — | — | — | — |
| C15 | VCC1833_4 | TRACECLK | P18_6 | — | MTIC5W | XSPI1_IO7 / ETH1_COL / SCK4 / DE4 / SPI_MISO2 / IIC_SCL2 | — | IRQ11 | ADTRG0# | — |
| D1 | — | — | P02_1 | A17 | — | ETHSW_PTPOUT1 / ESC_SYNC1 / ESC_SYNC0 / DE1 | — | — | — | HA17 |



Downloaded from Arrow.com.

**Table 1.19 List of pins and pin functions (225-pin FBGA) (3 of 8)**

| Pin number | I/O power domain | Power supply clock system control | I/O port | Bus, DMAC | Timer (MTU3, POEG, GPT / POE3, CMTW, RTC) | Communication (xSPI, GMAC, ETHSW, ESC, SCI, SPI, IIC, CANFD, USB) | Others (DSMIF, Mailbox) | Interrupt | ADC12 | Host interface (SHOSTIF, PHOSTIF) |
|---|---|---|---|---|---|---|---|---|---|---|
| D2 | — | TRACEDATA0 | P01_6 | A20 | MTIOC1A / GTIOC9A | GMAC_PTPTRG1 / ESC_LATCH1 / ESC_LATCH0 / CTS1# / CANTXDP1 | — | — | — | HA20 |
| D3 | VCC1833_2 | — | P01_1 | CKE | MTIOC3D / GTIOC1B | GMAC_MDC / ETHSW_MDC / ESC_MDC / DE2 | MDAT1 | — | — | — |
| D4 | VCC1833_2 | — | P00_7 | RAS# | MTIOC4A / GTIOC2A | — | — | IRQ13 | — | — |
| D5 | VCC1833_2 | — | P00_1 | A13 | MTIC5U | ETH2_RXDV / RXD2 / SCL2 / MISO2 | — | IRQ0 | — | — |
| D6 | VCC1833_2 | — | P23_7 | D11 / BS# | MTIOC0A / GTETRGA | ETH2_RXD0 / SCK1 | MCLK4 | — | — | HD11 |
| D7 | — | TRACEDATA5 | P21_6 | D5 / TEND | MTIOC7B / GTIOC16B | CTS0# | MDAT2 | IRQ9 | — | HD5 |
| D8 | — | MDV1 | P20_2 | — | — | ETHSW_TDMAOUT1 / ETHSW_PTPOUT2 / ESC_LEDRUN / ESC_LEDSTER / DE3 | — | — | — | — |
| D9 | — | MDV2 | P20_3 | — | — | ETHSW_TDMAOUT2 / ETHSW_PTPOUT1 / ESC_LEDERR | — | — | — | — |
| D10 | — | VSS | — | — | — | — | — | — | — | — |
| D11 | — | VSS | — | — | — | — | — | — | — | — |
| D12 | — | VSS | — | — | — | — | — | — | — | — |
| D13 | VCC1833_4 | TRACECTL | P18_5 | RAS# | MTIC5V | XSPI1_IO6 / ETH2_COL / RXD4 / SCL4 / MISO4 / SPI_MOSI2 / CANRX0 | — | — | — | — |
| D14 | VCC1833_4 | — | P18_2 | BS# | MTIOC4B / MTIOC4D / GTIOC2B / GTIOC3B | XSPI1_CS0# / ETH1_COL / SCK0 / IIC_SDA2 | — | — | — | — |
| D15 | VCC1833_4 | — | P18_1 | WE1# / DQMLU | MTIOC3D / GTIOC1B | SS3# / CTS3# / RTS3# | — | IRQ10 | ADTRG1# | HSPI_IO7 / HWR1# |
| E1 | — | — | P02_3 | A15 / AH# | MTIOC2B / GTIOC10B / POE11# | ETHSW_TDMAOUT1 / SS1# / CTS1# / RTS1# / SPI_SSL30 / CANRX1 | — | IRQ15 | — | HA15 |
| E2 | — | TRST# | — | — | — | — | — | — | — | — |
| E3 | — | TRACEDATA2 | P02_0 | A18 | GTADSML0 | ETHSW_LPI2 / RXD1 / SCL1 / MISO1 / SPI_MISO3 / CANTX1 / USB_OTGID | — | IRQ4 | — | HA18 |
| E4 | VCC1833_2 | — | P01_4 | WE1# / DQMLU | POE0# | ETH2_TXD1 | — | IRQ3 | — | — |
| E5 | VCC1833_2 | VCC1833_2 | — | — | — | — | — | — | — | — |
| E6 | — | VCC33 | — | — | — | — | — | — | — | — |
| E7 | — | TRACEDATA3 | P21_4 | D3 | MTIOC6D / GTIOC15B | ETHSW_PTPOUT1 / ESC_SYNC0 / ESC_SYNC1 / SS5# / CTS5# / RTS5# / SPI_SSL02 | MDAT1 / MBX_HINT# | — | — | HD3 |
| E8 | — | VCC33 | — | — | — | — | — | — | — | — |
| E9 | — | VCC18_ADC1 | — | — | — | — | — | — | — | — |
| E10 | — | VSS | — | — | — | — | — | — | — | — |
| E11 | — | VCC18_ADC0 | — | — | — | — | — | — | — | — |
| E12 | VCC1833_4 | — | P18_4 | CAS# | MTIC5U | XSPI1_IO5 / ETH1_CRS / TXD4 / SDA4 / MOSI4 / SPI_RSPCK2 / CANTX0 | — | IRQ1 | — | — |
| E13 | VCC1833_4 | — | P18_3 | CKE | MTIOC4D / MTIOC4B / GTIOC3B / GTIOC2B / CMTW1_TIC1 | XSPI1_IO4 / ETH2_CRS / CANRXDP1 | — | IRQ0 | — | — |
| E14 | VCC1833_4 | — | P18_0 | WE0# / DQMLL | MTIOC4C / MTIOC4A / GTIOC3A / GTIOC2A | TXD3 / SDA3 / MOSI3 | — | — | — | HSPI_IO6 / HWR0# |



Downloaded from Arrow.com.

**Table 1.19 List of pins and pin functions (225-pin FBGA) (4 of 8)**

| Pin number | I/O power domain | Power supply clock system control | I/O port | Bus, DMAC | Timer (MTU3, POEG, GPT / POE3, CMTW, RTC) | Communication (xSPI, GMAC, ETHSW, ESC, SCI, SPI, IIC, CANFD, USB) | Others (DSMIF, Mailbox) | Interrupt | ADC12 | Host interface (SHOSTIF, PHOSTIF) |
|---|---|---|---|---|---|---|---|---|---|---|
| E15 | VCC1833_4 | — | P17_7 | RD# / DACK | MTIOC4A / MTIOC4C / GTIOC2A / GTIOC3A | XSPI1_CKP / RXD3 / SCL3 / MISO3 | — | — | — | HRD# |
| F1 | — | TCK | P02_7 | — | — | TXD5 / SDA5 / MOSI5 | — | — | — | — |
| F2 | — | TDI | P02_5 | WE1# / DQMLU | — | ETHSW_TDMAOUT3 / SCK5 / SPI_SSL31 | — | — | — | — |
| F3 | — | — | P02_2 | A16 | MTIOC2A / GTIOC10A / POE10# / RTCAT1HZ | ETHSW_TDMAOUT0 / TXD1 / SDA1 / MOSI1 / SPI_MOSI3 / CANTX0 | — | IRQ14 | — | HA16 |
| F4 | — | TDO | P02_4 | WE0# / DQMLL | — | DE1 / SPI_SSL33 | — | — | — | — |
| F5 | — | TMS | P02_6 | — | — | RXD5 / SCL5 / MISO5 | — | — | — | — |
| F6 | — | VDD | — | — | — | — | — | — | — | — |
| F7 | — | VSS | — | — | — | — | — | — | — | — |
| F8 | — | VDD | — | — | — | — | — | — | — | — |
| F9 | — | VDD | — | — | — | — | — | — | — | — |
| F10 | — | VDD | — | — | — | — | — | — | — | — |
| F11 | VCC1833_4 | VCC1833_4 | — | — | — | — | — | — | — | — |
| F12 | VCC1833_4 | MDD | P17_0 | — | — | XSPI1_IO1 / ESC_IRQ / SS0# / CTS0# / RTS0# | — | — | — | — |
| F13 | VCC1833_4 | TRACECLK | P17_4 | DACK | MTIOC3C / GTETRGB / GTIOC0A | XSPI1_IO3 / CTS3# / SPI_SSL32 | — | — | — | — |
| F14 | VCC1833_4 | TRACECTL | P17_3 | DREQ | GTETRGA / POE0# | XSPI1_IO2 / SPI_SSL31 | — | — | ADTRG1# | — |
| F15 | VCC1833_4 | RSTOUT# | P17_5 | TEND | MTIOC3A / GTETRGC / GTIOC0B | USB_OVRCUR | — | — | — | — |
| G1 | — | — | P03_5 | A12 | MTIOC3A / GTIOC4A | ETH2_CRS / RXD2 / SCL2 / MISO2 | MCLK2 | IRQ5 | — | HA12 |
| G2 | — | BSCANP | — | — | — | — | — | — | — | — |
| G3 | — | TRACEDATA3 | P03_0 | A14 / CS5# | GTADSML1 | SCK2 / SPI_SSL32 / CANTXDP1 | — | IRQ14 | — | HA14 |
| G4 | — | TRACEDATA4 | P03_6 | A11 | MTIOC3B / GTIOC4B | ETH2_COL / TXD2 / SDA2 / MOSI2 / SPI_SSL13 | MDAT2 | IRQ8 | — | HA11 |
| G5 | — | TRACEDATA5 | P03_7 | A10 | MTIOC3C / GTIOC5A | ETH2_TXER / SCK3 | — | IRQ9 | — | HA10 |
| G6 | — | VDD | — | — | — | — | — | — | — | — |
| G7 | — | VSS | — | — | — | — | — | — | — | — |
| G8 | — | VSS | — | — | — | — | — | — | — | — |
| G9 | — | VSS | — | — | — | — | — | — | — | — |
| G10 | — | VDD | — | — | — | — | — | — | — | — |
| G11 | VCC1833_4 | — | P16_6 | CS0# | MTIC5V | RXD0 / SCL0 / MISO0 | — | IRQ8 | — | HSPI_IO5 / HCS0# |
| G12 | VCC1833_3 | — | P16_3 | CS3# | GTADSMP1 | XSPI0_RSTO0# / ETH1_TXER / ETH1_CRS / SCK0 / SPI_SSL30 | — | IRQ7 | — | HSPI_IO3 |
| G13 | VCC1833_3 | — | P16_0 | — | — | XSPI0_CS1# / ETH0_TXER / ETH2_REFCLK / TXD0 / SDA0 / MOSI0 / SPI_MOSI3 | MCLK3 | — | — | HSPI_CS# |
| G14 | VCC1833_4 | — | P16_7 | A13 | MTIC5W | XSPI1_IO0 / SCK0 | — | — | — | HA13 |
| G15 | VCC1833_4 | — | P17_6 | RD/WR# | MTIOC3B / GTIOC1A | XSPI1_DS / SCK3 | — | — | — | HWRSTB# |
| H1 | — | TRACEDATA6 | P04_0 | A9 | MTIOC3D / GTIOC5B | RXD3 / SCL3 / MISO3 | — | — | — | HA9 |
| H2 | — | — | P04_1 | CKIO | — | TXD3 / SDA3 / MOSI3 / SPI_MOSI0 / IIC_SDA2 | — | — | — | HCKIO |
| H3 | — | MD0 | P04_5 | A7 | — | ETHSW_PTPOUT0 / ESC_SYNC0 / ESC_SYNC1 / DE3 | — | — | — | HA7 |



Downloaded from Arrow.com.

**Table 1.19 List of pins and pin functions (225-pin FBGA) (5 of 8)**

| Pin number | I/O power domain | Power supply clock system control | I/O port | Bus, DMAC | Timer (MTU3, POEG, GPT / POE3, CMTW, RTC) | Communication (xSPI, GMAC, ETHSW, ESC, SCI, SPI, IIC, CANFD, USB) | Others (DSMIF, Mailbox) | Interrupt | ADC12 | Host interface (SHOSTIF, PHOSTIF) |
|---|---|---|---|---|---|---|---|---|---|---|
| H4 | — | TRACEDATA7 | P04_4 | A8 | GTADSMP0 / POE10# | CTS3# / SPI_RSPCK1 | — | IRQ10 | — | HA8 |
| H5 | — | MD1 | P04_6 | A6 / DACK | RTCAT1HZ | ETH1_TXER | — | — | — | HA6 |
| H6 | — | VDD | — | — | — | — | — | — | — | — |
| H7 | — | VSS | — | — | — | — | — | — | — | — |
| H8 | — | VSS | — | — | — | — | — | — | — | — |
| H9 | — | VSS | — | — | — | — | — | — | — | — |
| H10 | — | VDD | — | — | — | — | — | — | — | — |
| H11 | VCC1833_3 | — | P16_1 | CS2# | CMTW0_TOC1 | XSPI0_RESET0# / RXD0 / SCL0 / MISO0 / SPI_MISO3 | MDAT3 | — | ADTRG0# | HCS1# |
| H12 | VCC1833_3 | — | P15_6 | D14 | — | XSPI0_IO7 / SPI_SSL12 | MDAT2 | — | — | — |
| H13 | VCC1833_3 | — | P15_4 | D12 | MTIOC8D | XSPI0_IO5 | MDAT1 | — | — | — |
| H14 | VCC1833_3 | — | P16_2 | — | — | XSPI0_RESET1# / CTS0# / SPI_RSPCK3 / USB_EXICEN | — | NMI | — | HSPI_IO2 / HERROUT# |
| H15 | VCC1833_4 | — | P16_5 | A15 | MTIC5U | TXD0 / SDA0 / MOSI0 | — | — | — | HSPI_IO4 |
| J1 | — | MD2 | P04_7 | A5 | — | ETH0_TXER / ETH2_TXER / SPI_SSL21 | — | — | — | HA5 |
| J2 | — | — | P05_1 | A3 | MTIOC4B / GTIOC6B / CMTW0_TIC1 | ETH1_COL / CTS5# / CANRXDP0 / USB_EXICEN | MDAT3 | IRQ13 | — | HA3 |
| J3 | — | — | P05_3 | A1 | MTIOC4D / GTETRGSB / GTIOC7B / POE11# / CMTW0_TIC0 | ETH0_COL / SCK4 / IIC_SDA1 / CANTX0 / USB_EXICEN | — | IRQ15 | — | HA1 |
| J4 | — | — | P05_2 | A2 / DREQ | MTIOC4C / GTETRGSA / GTIOC7A / CMTW0_TOC0 | ETH0_CRS / DE5 / IIC_SCL1 / CANRX0 / USB_VBUSEN | — | IRQ14 | — | HA2 |
| J5 | — | — | P05_0 | A4 | MTIOC4A / GTIOC6A / CMTW0_TOC0 | ETH1_CRS / SS5# / CTS5# / RTS5# / CANTXDP0 / USB_VBUSEN | MCLK3 | IRQ12 | — | HA4 |
| J6 | — | VDD | — | — | — | — | — | — | — | — |
| J7 | — | VSS | — | — | — | — | — | — | — | — |
| J8 | — | VSS | — | — | — | — | — | — | — | — |
| J9 | — | VSS | — | — | — | — | — | — | — | — |
| J10 | — | VDD | — | — | — | — | — | — | — | — |
| J11 | VCC1833_3 | VCC1833_3 | — | — | — | — | — | — | — | — |
| J12 | VCC1833_3 | — | P14_5 | CS3# | POE8# | XSPI0_CKN | — | — | — | HSPI_INT# |
| J13 | VCC1833_3 | — | P14_4 | BS# | MTIOC0B | XSPI0_DS / ESC_IRQ | — | — | — | HBS# |
| J14 | VCC1833_3 | — | P15_5 | D13 | — | XSPI0_IO6 | MCLK2 | — | — | — |
| J15 | VCC1833_3 | — | P15_7 | TEND | — | XSPI0_CS0# / CTS5# / SPI_SSL13 | — | — | — | — |
| K1 | VCC1833_1 | — | P05_4 | A0 / DACK | GTIOC14A | ETHSW_LPI0 / RXD4 / SCL4 / MISO4 / SPI_SSL00 / CANTXDP0 / USB_OVRCUR | — | IRQ12 | — | HA0 |
| K2 | VCC1833_1 | — | P05_5 | — | GTIOC14B / CMTW0_TOC1 | ETHSW_PHYLINK1 / ESC_PHYLINK1 / SPI_RSPCK2 | — | — | — | — |
| K3 | VCC1833_1 | — | P05_6 | — | GTIOC15A / CMTW1_TIC0 | ETH1_RXER / SPI_SSL22 | — | IRQ12 | — | — |
| K4 | VCC1833_1 | — | P06_3 | D3 | GTIOC17B / CMTW1_TIC1 | ETH1_TXD0 / DE4 / SPI_MISO1 / CANTXDP1 | — | — | — | — |
| K5 | VCC1833_1 | VCC1833_1 | — | — | — | — | — | — | — | — |
| K6 | — | VDD | — | — | — | — | — | — | — | — |



Downloaded from Arrow.com.

**Table 1.19 List of pins and pin functions (225-pin FBGA) (6 of 8)**

| Pin number | I/O power domain | Power supply clock system control | I/O port | Bus, DMAC | Timer (MTU3, POEG, GPT / POE3, CMTW, RTC) | Communication (xSPI, GMAC, ETHSW, ESC, SCI, SPI, IIC, CANFD, USB) | Others (DSMIF, Mailbox) | Interrupt | ADC12 | Host interface (SHOSTIF, PHOSTIF) |
|---|---|---|---|---|---|---|---|---|---|---|
| K7 | — | VDD | — | — | — | — | — | — | — | — |
| K8 | — | VDD | — | — | — | — | — | — | — | — |
| K9 | — | VSS | — | — | — | — | — | — | — | — |
| K10 | — | VDD | — | — | — | — | — | — | — | — |
| K11 | VCC1833_3 | — | P15_3 | D11 | MTIOC8C | XSPI0_IO4 | MCLK1 | — | — | — |
| K12 | VCC1833_3 | — | P14_2 | — | MTIOC8B / GTIOC8B | XSPI0_ECS0# / ETH0_CRS / ETH2_CRS | — | IRQ6 | — | HSPI_CK |
| K13 | VCC1833_3 | — | P14_6 | A21 | — | XSPI0_CKP | — | — | — | — |
| K14 | VCC1833_3 | — | P15_1 | A24 / CAS# | MTIOC0C | XSPI0_IO2 / TXD5 / SDA5 / MOSI5 / SPI_SSL10 | — | — | — | — |
| K15 | VCC1833_3 | — | P15_2 | A25 / RAS# | MTIOC0D | XSPI0_IO3 / SS5# / CTS5# / RTS5# / SPI_SSL11 | — | — | — | — |
| L1 | — | VSS | — | — | — | — | — | — | — | — |
| L2 | VCC1833_1 | — | P06_0 | D0 | GTIOC16A / CMTW1_TOC0 | ETH1_TXD3 / SS4# / CTS4# / RTS4# / SPI_SSL23 / CANRX1 | — | — | — | — |
| L3 | VCC1833_1 | — | P06_1 | D1 | GTIOC16B | ETH1_REFCLK / RMII1_REFCLK / CTS4# / SPI_SSL22 / CANTX1 | — | — | — | — |
| L4 | VCC1833_1 | — | P06_6 | D6 | GTIOC12A | ETH1_RXD0 / SPI_SSL10 | — | — | — | — |
| L5 | — | VCC33 | — | — | — | — | — | — | — | — |
| L6 | VCC1833_0 | VCC1833_0 | — | — | — | — | — | — | — | — |
| L7 | VCC1833_0 | — | P09_7 | — | — | ETH0_TXCLK | — | — | — | — |
| L8 | VCC1833_0 | — | P10_2 | — | — | ETH0_RXD1 | — | — | — | — |
| L9 | VCC1833_0 | — | P10_3 | — | RTCAT1HZ | ETH0_RXD2 | — | — | — | — |
| L10 | — | TRACEDATA6 | P13_2 | D9 / A13 | MTIOC0A / GTIOC10A / POE8# | ETHSW_PTPOUT2 / ESC_I2CCLK / SS1# / CTS1# / RTS1# / SPI_MISO0 / IIC_SCL0 | MCLK4 | IRQ5 | — | — |
| L11 | VCC1833_3 | — | P15_0 | A23 / CKE | — | XSPI0_IO1 / RXD5 / SCL5 / MISO5 / SPI_MOSI1 | — | — | — | — |
| L12 | — | — | P13_4 | A0 | MTIOC0D / GTIOC8B | ESC_RESETOUT# | — | — | — | — |
| L13 | VCC1833_3 | — | P14_0 | — | MTCLKD | XSPI0_INT0# / ETHSW_PTPOUT1 / ESC_SYNC1 / ESC_SYNC0 | — | — | — | — |
| L14 | VCC1833_3 | — | P14_1 | — | MTIOC8A / GTIOC8A | XSPI0_INT1# / ETH1_COL / GMAC_PTPTRG1 / ESC_LATCH0 / ESC_LATCH1 | — | — | — | HSPI_IO0 |
| L15 | — | VSS | — | — | — | — | — | — | — | — |
| M1 | VCC1833_1 | — | P05_7 | — | GTIOC15B / CMTW1_TOC1 | ETH1_TXD2 / TXD4 / SDA4 / MOSI4 / SPI_SSL23 | — | — | — | — |
| M2 | VCC1833_1 | — | P06_2 | D2 | GTIOC17A | ETH1_TXD1 / CANRXDP1 | — | — | — | — |
| M3 | VCC1833_1 | — | P06_7 | D7 | GTIOC12B | ETH1_RXD1 / SPI_SSL11 | — | — | — | — |
| M4 | VCC1833_1 | — | P07_3 | — | — | ETH1_RXCLK | — | — | — | — |
| M5 | VCC1833_0 | — | P08_6 | — | MTIOC6C | ETH0_RXCLK | — | — | — | — |
| M6 | VCC1833_0 | — | P09_4 | — | — | ETH0_TXD2 | — | — | — | — |
| M7 | VCC1833_0 | — | P09_6 | — | — | ETH0_TXD0 | — | — | — | — |
| M8 | VCC1833_0 | — | P10_1 | — | — | ETH0_RXD0 | — | — | — | — |
| M9 | VCC1833_0 | — | P10_4 | — | — | ETHSW_PHYLINK0 / ESC_PHYLINK0 | — | IRQ11 | — | — |
| M10 | — | VCC33 | — | — | — | — | — | — | — | — |
| M11 | VCC1833_3 | — | P13_7 | — | MTCLKC | XSPI0_ECS1# / GMAC_PTPTRG1 / ESC_LATCH1 / ESC_LATCH0 | MBX_HINT# | — | — | — |



Downloaded from Arrow.com.

**Table 1.19 List of pins and pin functions (225-pin FBGA) (7 of 8)**

| Pin number | I/O power domain | Power supply clock system control | I/O port | Bus, DMAC | Timer (MTU3, POEG, GPT / POE3, CMTW, RTC) | Communication (xSPI, GMAC, ETHSW, ESC, SCI, SPI, IIC, CANFD, USB) | Others (DSMIF, Mailbox) | Interrupt | ADC12 | Host interface (SHOSTIF, PHOSTIF) |
|---|---|---|---|---|---|---|---|---|---|---|
| M12 | VCC1833_3 | — | P13_5 | — | MTCLKA | XSPI0_WP1# / GMAC_PTPTRG0 / ESC_LATCH0 / ESC_LATCH1 / SPI_RSPCK1 / IIC_SCL2 | — | — | — | — |
| M13 | VCC1833_3 | — | P13_6 | — | MTCLKB | XSPI0_WP0# / ETHSW_PTPOUT0 / ESC_SYNC0 / ESC_SYNC1 | — | — | — | — |
| M14 | VCC1833_3 | — | P14_3 | — | MTIOC0A | XSPI0_RSTO1# / ETH0_COL / ETH2_COL | — | — | — | HSPI_IO1 |
| M15 | VCC1833_3 | — | P14_7 | A22 / BS# | — | XSPI0_IO0 / SCK5 / SPI_MISO1 | — | — | — | — |
| N1 | VCC1833_1 | — | P06_4 | D4 | GTIOC11A | ETH1_TXCLK / SPI_MOSI1 | — | — | — | — |
| N2 | VCC1833_1 | — | P06_5 | D5 | GTIOC11B | ETH1_TXEN | — | — | — | — |
| N3 | VCC1833_1 | — | P07_1 | — | GTIOC13B | ETH1_RXD3 | — | — | — | — |
| N4 | VCC1833_0 | — | P08_4 | — | MTIOC6A | ETH0_RXD3 | — | — | — | — |
| N5 | VCC1833_0 | — | P08_7 | — | MTIOC6D | GMAC_MDC / ETHSW_MDC / ESC_MDC | — | — | — | — |
| N6 | VCC1833_0 | — | P09_2 | — | MTIOC7C | ETH0_RXER | — | IRQ0 | — | — |
| N7 | VCC1833_0 | — | P09_5 | — | — | ETH0_TXD1 | — | — | — | — |
| N8 | VCC1833_0 | — | P10_0 | — | — | ETH0_TXEN | — | — | — | — |
| N9 | — | VCC18_PLL1 | — | — | — | — | — | — | — | — |
| N10 | — | VSS | — | — | — | — | — | — | — | — |
| N11 | — | TRACEDATA0 | P12_4 | D15 | MTIOC8B / GTIOC8B | ETH1_CRS / SPI_SSL01 | MBX_HINT# | — | — | — |
| N12 | — | TRACEDATA7 | P13_3 | D8 / RD# | MTIOC0C / MTIOC0B / GTIOC10B / CMTW1_TOC0 | ETHSW_PTPOUT3 / ESC_I2CDATA / CTS1# / SPI_RSPCK0 / IIC_SDA0 | MDAT4 | — | — | — |
| N13 | — | VSS_USB | — | — | — | — | — | — | — | — |
| N14 | — | VSS | — | — | — | — | — | — | — | — |
| N15 | — | VSS_USB | — | — | — | — | — | — | — | — |
| P1 | VCC1833_1 | — | P07_0 | — | GTIOC13A | ETH1_RXD2 | — | — | — | — |
| P2 | VCC1833_1 | — | P07_2 | — | — | ETH1_RXDV | — | — | — | — |
| P3 | VCC1833_0 | — | P08_5 | — | MTIOC6B | ETH0_RXDV | — | — | — | — |
| P4 | VCC1833_0 | — | P09_0 | — | MTIOC7A | GMAC_MDIO / ETHSW_MDIO / ESC_MDIO | — | — | — | — |
| P5 | — | MDX | — | — | — | — | — | — | — | — |
| P6 | — | RES# | — | — | — | — | — | — | — | — |
| P7 | — | VDD | — | — | — | — | — | — | — | — |
| P8 | — | VSS | — | — | — | — | — | — | — | — |
| P9 | — | VCC18_PLL0 | — | — | — | — | — | — | — | — |
| P10 | — | AVCC18_USB | — | — | — | — | — | — | — | — |
| P11 | — | VCC18_USB | — | — | — | — | — | — | — | — |
| P12 | — | VSS_USB | — | — | — | — | — | — | — | — |
| P13 | — | — | — | — | — | USB_DM | — | — | — | — |
| P14 | — | VSS_USB | — | — | — | — | — | — | — | — |
| P15 | — | — | — | — | — | USB_RREF | — | — | — | — |
| R1 | — | VSS | — | — | — | — | — | — | — | — |
| R2 | — | — | P07_4 | — | — | USB_VBUSIN | — | IRQ1 | ADTRG0# | — |
| R3 | VCC1833_0 | — | P09_1 | — | MTIOC7B | ETH0_REFCLK / RMII0_REFCLK | — | — | — | — |
| R4 | VCC1833_0 | — | P09_3 | — | MTIOC7D | ETH0_TXD3 | — | — | — | — |



Downloaded from Arrow.com.

**Table 1.19 List of pins and pin functions (225-pin FBGA) (8 of 8)**

| Pin number | I/O power domain | Power supply clock system control | I/O port | Bus, DMAC | Timer (MTU3, POEG, GPT / POE3, CMTW, RTC) | Communication (xSPI, GMAC, ETHSW, ESC, SCI, SPI, IIC, CANFD, USB) | Others (DSMIF, Mailbox) | Interrupt | ADC12 | Host interface (SHOSTIF, PHOSTIF) |
|---|---|---|---|---|---|---|---|---|---|---|
| R5 | — | VSS | — | — | — | — | — | — | — | — |
| R6 | — | EXTCLKIN | — | — | — | — | — | — | — | — |
| R7 | — | EXTAL | — | — | — | — | — | — | — | — |
| R8 | — | XTAL | — | — | — | — | — | — | — | — |
| R9 | — | VSS | — | — | — | — | — | — | — | — |
| R10 | — | AVCC18_USB | — | — | — | — | — | — | — | — |
| R11 | — | VCC33_USB | — | — | — | — | — | — | — | — |
| R12 | — | VSS_USB | — | — | — | — | — | — | — | — |
| R13 | — | — | — | — | — | USB_DP | — | — | — | — |
| R14 | — | VSS_USB | — | — | — | — | — | — | — | — |
| R15 | — | VSS | — | — | — | — | — | — | — | — |



Downloaded from Arrow.com.

## 1.7 FBGA 121 Pin Assignments

| | 1 | 2 | 3 | 4 | 5 | 6 | 7 | 8 | 9 | 10 | 11 | |
|---|---|---|---|---|---|---|---|---|---|---|---|---|
| A | VSS | P01_2 | P00_5 | P00_4 | P24_2 | P24_1 | P24_0 | P21_1 | P21_2 | P20_4 | VSS | A |
| B | P01_5 | P01_4 | P00_6 | P00_2 | P00_0 | P23_7 | P21_3 | P20_2 | P20_1 | P18_6 | P18_4 | B |
| C | P02_5 | P01_3 | TRST# | VCC 1833_2 | P00_1 | VCC33 | P21_4 | P20_3 | P18_5 | P18_3 | P17_5 | C |
| D | P02_7 | P02_4 | P02_6 | VDD | VSS | VDD | VDD | AVCC18 _TSU | P18_2 | P17_0 | P16_5 | D |
| E | P04_6 | P04_5 | BSCANP | VCC33 | VSS | VSS | VSS | VSS | VCC 1833_4 | P16_3 | P16_2 | E |
| F | VSS | P04_7 | P05_5 | VDD | VDD | VSS | VSS | VDD | P16_6 | P16_0 | VSS | F |
| G | P05_6 | P05_7 | VCC 1833_1 | VSS | VDD | VDD | VDD | VSS | VCC 1833_3 | P15_2 | P15_7 | G |
| H | P06_1 | P06_0 | P06_6 | P06_3 | VSS | VDD | VCC33 | VCC33 | P15_0 | P14_7 | P15_1 | H |
| J | P06_4 | P06_2 | P07_1 | VCC33 | RES# | VSS | VCC18_ PLL0 | VSS | P14_2 | P14_3 | P14_6 | J |
| K | P06_5 | P06_7 | P07_3 | P08_7 | MDX | VCC 1833_0 | EXT CLKIN | VCC18 _PLL1 | P13_3 | P13_5 | P14_1 | K |
| L | VSS | P07_0 | P07_2 | P09_0 | VSS | EXTAL | XTAL | VSS | P13_2 | P13_4 | VSS | L |
| | 1 | 2 | 3 | 4 | 5 | 6 | 7 | 8 | 9 | 10 | 11 | |

**Figure 1.3 Pin arrangement (121-pin FBGA) (top view)**

**Table 1.20 List of pins and pin functions (121-pin FBGA) (1 of 4)**

| Pin number | I/O power domain | Power supply clock system control | I/O port | DMAC | Timer (MTU3, POEG, GPT / POE3, CMTW, RTC) | Communication (xSPI, GMAC, ETHSW, ESC, SCI, SPI, IIC, CANFD) | Others (DSMIF, Mailbox) | Interrupt | Host interface (SHOSTIF) |
|---|---|---|---|---|---|---|---|---|---|
| A1 | — | VSS | — | — | — | — | — | — | — |
| A2 | VCC1833_2 | — | P01_2 | — | MTIOC4B / GTIOC2B | ETH2_TXD3 | — | IRQ2 | — |
| A3 | VCC1833_2 | — | P00_5 | — | MTIOC3C / GTIOC0B | ETHSW_PHYLINK2 / ETHSW_PHYLINK0 / ESC_PHYLINK0 | MDAT0 | — | — |
| A4 | VCC1833_2 | — | P00_4 | — | MTIOC3A / GTIOC0A | ETH2_RXER | MCLK0 | IRQ13 | — |
| A5 | VCC1833_2 | — | P24_2 | — | MTIOC0D / GTETRGD | ETH2_RXD2 / TXD1 / SDA1 / MOSI1 | MDAT5 | — | — |
| A6 | VCC1833_2 | — | P24_1 | — | MTIOC0C / GTETRGC / POE8# | ETH2_RXCLK | MCLK5 | — | — |
| A7 | VCC1833_2 | — | P24_0 | DREQ | MTIOC0B / GTETRGB | ETH2_RXD1 / RXD1 / SCL1 / MISO1 | MDAT4 | — | — |
| A8 | — | TRACEDATA0 | P21_1 | — | MTIOC6A / GTIOC14A / CMTW0_TIC0 | ESC_SYNC0 / ESC_SYNC1 / SCK5 / SPI_SSL20 / IIC_SCL1 | MCLK0 | — | HSPI_INT# |
| A9 | — | TRACEDATA1 | P21_2 | — | MTIOC6B / GTIOC14B / CMTW0_TIC1 | ESC_SYNC0 / ESC_SYNC1 / RXD5 / SCL5 / MISO5 / SPI_MISO2 / IIC_SDA1 | MDAT0 | — | — |
| A10 | — | MDV3 | P20_4 | — | — | ETHSW_TDMAOUT3 / ETHSW_PTPOUT0 / ESC_LINKACT1 | — | — | — |
| A11 | — | VSS | — | — | — | — | — | — | — |
| B1 | VCC1833_2 | — | P01_5 | — | — | ETH2_TXD0 | — | — | — |
| B2 | VCC1833_2 | — | P01_4 | — | POE0# | ETH2_TXD1 | — | IRQ3 | — |
| B3 | VCC1833_2 | — | P00_6 | — | MTIOC3B / GTIOC1A | ETH2_TXCLK | — | — | — |
| B4 | VCC1833_2 | — | P00_2 | — | MTIC5V | ETH2_TXEN / TXD2 / SDA2 / MOSI2 | — | — | — |
| B5 | VCC1833_2 | — | P00_0 | — | — | ETH2_RXD3 / SCK2 / DE2 | — | — | — |
| B6 | VCC1833_2 | — | P23_7 | — | MTIOC0A / GTETRGA | ETH2_RXD0 / SCK1 | MCLK4 | — | — |
| B7 | — | TRACEDATA2 | P21_3 | — | MTIOC6C / GTIOC15A | TXD5 / SDA5 / MOSI5 | MCLK1 | — | — |



Downloaded from Arrow.com.

**Table 1.20 List of pins and pin functions (121-pin FBGA) (2 of 4)**

| Pin number | I/O power domain | Power supply clock system control | I/O port | DMAC | Timer (MTU3, POEG, GPT / POE3, CMTW, RTC) | Communication (xSPI, GMAC, ETHSW, ESC, SCI, SPI, IIC, CANFD) | Others (DSMIF, Mailbox) | Interrupt | Host interface (SHOSTIF) |
|---|---|---|---|---|---|---|---|---|---|
| B8 | — | MDV1 | P20_2 | — | — | ETHSW_TDMAOUT1 / ETHSW_PTPOUT2 / ESC_LEDRUN / ESC_LEDSTER | — | — | — |
| B9 | — | MDV0 | P20_1 | — | — | ETHSW_TDMAOUT0 / ETHSW_PTPOUT3 / ESC_LINKACT0 | — | — | — |
| B10 | VCC1833_4 | TRACECLK | P18_6 | — | MTIC5W | ETH1_COL / SCK4 / DE4 / SPI_MISO2 / IIC_SCL2 | — | IRQ11 | — |
| B11 | VCC1833_4 | — | P18_4 | — | MTIC5U | ETH1_CRS / TXD4 / SDA4 / MOSI4 / SPI_RSPCK2 / CANTX0 | — | IRQ1 | — |
| C1 | — | TDI | P02_5 | — | — | ETHSW_TDMAOUT3 / SCK5 | — | — | — |
| C2 | VCC1833_2 | — | P01_3 | — | MTIOC4D / GTIOC3B | ETH2_TXD2 | — | — | — |
| C3 | — | TRST# | — | — | — | — | — | — | — |
| C4 | VCC1833_2 | VCC1833_2 | — | — | — | — | — | — | — |
| C5 | VCC1833_2 | — | P00_1 | — | MTIC5U | ETH2_RXDV / RXD2 / SCL2 / MISO2 | — | IRQ0 | — |
| C6 | — | VCC33 | — | — | — | — | — | — | — |
| C7 | — | TRACEDATA3 | P21_4 | — | MTIOC6D / GTIOC15B | ETHSW_PTPOUT1 / ESC_SYNC0 / ESC_SYNC1 / SS5# / CTS5# / RTS5# | MDAT1 / MBX_HINT# | — | — |
| C8 | — | MDV2 | P20_3 | — | — | ETHSW_TDMAOUT2 / ETHSW_PTPOUT1 / ESC_LEDERR | — | — | — |
| C9 | VCC1833_4 | TRACECTL | P18_5 | — | MTIC5V | ETH2_COL / RXD4 / SCL4 / MISO4 / SPI_MOSI2 / CANRX0 | — | — | — |
| C10 | VCC1833_4 | — | P18_3 | — | MTIOC4D / MTIOC4B / GTIOC3B / GTIOC2B / CMTW1_TIC1 | ETH2_CRS / CANRXDP1 | — | IRQ0 | — |
| C11 | VCC1833_4 | RSTOUT# | P17_5 | TEND# | MTIOC3A / GTETRGC / GTIOC0B | — | — | — | — |
| D1 | — | TCK | P02_7 | — | — | TXD5 / SDA5 / MOSI5 | — | — | — |
| D2 | — | TDO | P02_4 | — | — | DE1 | — | — | — |
| D3 | — | TMS | P02_6 | — | — | RXD5 / SCL5 / MISO5 | — | — | — |
| D4 | — | VDD | — | — | — | — | — | — | — |
| D5 | — | VSS | — | — | — | — | — | — | — |
| D6 | — | VDD | — | — | — | — | — | — | — |
| D7 | — | VDD | — | — | — | — | — | — | — |
| D8 | — | AVCC18_TSU | — | — | — | — | — | — | — |
| D9 | VCC1833_4 | — | P18_2 | — | MTIOC4B / MTIOC4D / GTIOC2B / GTIOC3B | ETH1_COL / SCK0 / IIC_SDA2 | — | — | — |
| D10 | VCC1833_4 | MDD | P17_0 | — | — | ESC_IRQ / SS0# / CTS0# / RTS0# | — | — | — |
| D11 | VCC1833_4 | — | P16_5 | — | MTIC5U | TXD0 / SDA0 / MOSI0 | — | — | — |
| E1 | — | MD1 | P04_6 | DACK# | RTCAT1HZ | ETH1_TXER | — | — | — |
| E2 | — | MD0 | P04_5 | — | — | ETHSW_PTPOUT0 / ESC_SYNC0 / ESC_SYNC1 | — | — | — |
| E3 | — | BSCANP | — | — | — | — | — | — | — |
| E4 | — | VCC33 | — | — | — | — | — | — | — |
| E5 | — | VSS | — | — | — | — | — | — | — |
| E6 | — | VSS | — | — | — | — | — | — | — |
| E7 | — | VSS | — | — | — | — | — | — | — |
| E8 | — | VSS | — | — | — | — | — | — | — |
| E9 | VCC1833_4 | VCC1833_4 | — | — | — | — | — | — | — |
| E10 | VCC1833_3 | — | P16_3 | — | GTADSMP1 | XSPI0_RSTO0# / ETH1_TXER / ETH1_CRS / SCK0 | — | IRQ7 | HSPI_IO3 |
| E11 | VCC1833_3 | — | P16_2 | — | — | XSPI0_RESET1# / CTS0# | — | NMI | HSPI_IO2 |



Downloaded from Arrow.com.

**Table 1.20 List of pins and pin functions (121-pin FBGA) (3 of 4)**

| Pin number | I/O power domain | Power supply clock system control | I/O port | DMAC | Timer (MTU3, POEG, GPT / POE3, CMTW, RTC) | Communication (xSPI, GMAC, ETHSW, ESC, SCI, SPI, IIC, CANFD) | Others (DSMIF, Mailbox) | Interrupt | Host interface (SHOSTIF) |
|---|---|---|---|---|---|---|---|---|---|
| F1 | — | VSS | — | — | — | — | — | — | — |
| F2 | — | MD2 | P04_7 | — | — | ETH2_TXER / SPI_SSL21 | — | — | — |
| F3 | VCC1833_1 | — | P05_5 | — | GTIOC14B / CMTW0_TOC1 | ETHSW_PHYLINK1 / ESC_PHYLINK1 / SPI_RSPCK2 | — | — | — |
| F4 | — | VDD | — | — | — | — | — | — | — |
| F5 | — | VDD | — | — | — | — | — | — | — |
| F6 | — | VSS | — | — | — | — | — | — | — |
| F7 | — | VSS | — | — | — | — | — | — | — |
| F8 | — | VDD | — | — | — | — | — | — | — |
| F9 | VCC1833_4 | — | P16_6 | — | MTIC5V | RXD0 / SCL0 / MISO0 | — | IRQ8 | — |
| F10 | VCC1833_3 | — | P16_0 | — | — | XSPI0_CS1# / ETH2_REFCLK / TXD0 / SDA0 / MOSI0 | — | — | HSPI_CS# |
| F11 | — | VSS | — | — | — | — | — | — | — |
| G1 | VCC1833_1 | — | P05_6 | — | GTIOC15A / CMTW1_TIC0 | ETH1_RXER / SPI_SSL22 | — | IRQ12 | — |
| G2 | VCC1833_1 | — | P05_7 | — | GTIOC15B / CMTW1_TOC1 | ETH1_TXD2 / TXD4 / SDA4 / MOSI4 / SPI_SSL23 | — | — | — |
| G3 | VCC1833_1 | VCC1833_1 | — | — | — | — | — | — | — |
| G4 | — | VSS | — | — | — | — | — | — | — |
| G5 | — | VDD | — | — | — | — | — | — | — |
| G6 | — | VDD | — | — | — | — | — | — | — |
| G7 | — | VDD | — | — | — | — | — | — | — |
| G8 | — | VSS | — | — | — | — | — | — | — |
| G9 | VCC1833_3 | VCC1833_3 | — | — | — | — | — | — | — |
| G10 | VCC1833_3 | — | P15_2 | — | MTIOC0D | XSPI0_IO3 / SS5# / CTS5# / RTS5# / SPI_SSL11 | — | — | — |
| G11 | VCC1833_3 | — | P15_7 | TEND# | — | XSPI0_CS0# / CTS5# / SPI_SSL13 | — | — | — |
| H1 | VCC1833_1 | — | P06_1 | — | GTIOC16B | ETH1_REFCLK / RMII1_REFCLK / CTS4# / SPI_SSL22 / CANTX1 | — | — | — |
| H2 | VCC1833_1 | — | P06_0 | — | GTIOC16A / CMTW1_TOC0 | ETH1_TXD3 / SS4# / CTS4# / RTS4# / SPI_SSL23 / CANRX1 | — | — | — |
| H3 | VCC1833_1 | — | P06_6 | — | GTIOC12A | ETH1_RXD0 / SPI_SSL10 | — | — | — |
| H4 | VCC1833_1 | — | P06_3 | — | GTIOC17B / CMTW1_TIC1 | ETH1_TXD0 / DE4 / SPI_MISO1 / CANTXDP1 | — | — | — |
| H5 | — | VSS | — | — | — | — | — | — | — |
| H6 | — | VDD | — | — | — | — | — | — | — |
| H7 | — | VCC33 | — | — | — | — | — | — | — |
| H8 | — | VCC33 | — | — | — | — | — | — | — |
| H9 | VCC1833_3 | — | P15_0 | — | — | XSPI0_IO1 / RXD5 / SCL5 / MISO5 / SPI_MOSI1 | — | — | — |
| H10 | VCC1833_3 | — | P14_7 | — | — | XSPI0_IO0 / SCK5 / SPI_MISO1 | — | — | — |
| H11 | VCC1833_3 | — | P15_1 | — | MTIOC0C | XSPI0_IO2 / TXD5 / SDA5 / MOSI5 / SPI_SSL10 | — | — | — |
| J1 | VCC1833_1 | — | P06_4 | — | GTIOC11A | ETH1_TXCLK / SPI_MOSI1 | — | — | — |
| J2 | VCC1833_1 | — | P06_2 | — | GTIOC17A | ETH1_TXD1 / CANRXDP1 | — | — | — |
| J3 | VCC1833_1 | — | P07_1 | — | GTIOC13B | ETH1_RXD3 | — | — | — |
| J4 | — | VCC33 | — | — | — | — | — | — | — |
| J5 | — | RES# | — | — | — | — | — | — | — |
| J6 | — | VSS | — | — | — | — | — | — | — |
| J7 | — | VCC18_PLL0 | — | — | — | — | — | — | — |
| J8 | — | VSS | — | — | — | — | — | — | — |



Downloaded from Arrow.com.

**Table 1.20 List of pins and pin functions (121-pin FBGA) (4 of 4)**

| Pin number | I/O power domain | Power supply clock system control | I/O port | DMAC | Timer (MTU3, POEG, GPT / POE3, CMTW, RTC) | Communication (xSPI, GMAC, ETHSW, ESC, SCI, SPI, IIC, CANFD) | Others (DSMIF, Mailbox) | Interrupt | Host interface (SHOSTIF) |
|---|---|---|---|---|---|---|---|---|---|
| J9 | VCC1833_3 | — | P14_2 | — | MTIOC8B / GTIOC8B | XSPI0_ECS0 # / ETH2_CRS | — | IRQ6 | HSPI_CK |
| J10 | VCC1833_3 | — | P14_3 | — | MTIOC0A | XSPI0_RSTO1# / ETH2_COL | — | — | HSPI_IO1 |
| J11 | VCC1833_3 | — | P14_6 | — | — | XSPI0_CKP | — | — | — |
| K1 | VCC1833_1 | — | P06_5 | — | GTIOC11B | ETH1_TXEN | — | — | — |
| K2 | VCC1833_1 | — | P06_7 | — | GTIOC12B | ETH1_RXD1 / SPI_SSL11 | — | — | — |
| K3 | VCC1833_1 | — | P07_3 | — | — | ETH1_RXCLK | — | — | — |
| K4 | VCC1833_0 | — | P08_7 | — | MTIOC6D | GMAC_MDC / ETHSW_MDC / ESC_MDC | — | — | — |
| K5 | — | MDX | — | — | — | — | — | — | — |
| K6 | VCC1833_0 | VCC1833_0 | — | — | — | — | — | — | — |
| K7 | — | EXTCLKIN | — | — | — | — | — | — | — |
| K8 | — | VCC18_PLL1 | — | — | — | — | — | — | — |
| K9 | — | — | P13_3 | — | MTIOC0C / MTIOC0B / GTIOC10B / CMTW1_TOC0 | ETHSW_PTPOUT3 / ESC_I2CDATA / CTS1# / IIC_SDA0 | MDAT4 | — | — |
| K10 | VCC1833_3 | — | P13_5 | — | MTCLKA | XSPI0_WP1# / GMAC_PTPTRG0 / ESC_LATCH0 / ESC_LATCH1 / SPI_RSPCK1 / IIC_SCL2 | — | — | — |
| K11 | VCC1833_3 | — | P14_1 | — | MTIOC8A / GTIOC8A | XSPI0_INT1# / ETH1_COL / GMAC_PTPTRG1 / ESC_LATCH0 / ESC_LATCH1 | — | — | HSPI_IO0 |
| L1 | — | VSS | — | — | — | — | — | — | — |
| L2 | VCC1833_1 | — | P07_0 | — | GTIOC13A | ETH1_RXD2 | — | — | — |
| L3 | VCC1833_1 | — | P07_2 | — | — | ETH1_RXDV | — | — | — |
| L4 | VCC1833_0 | — | P09_0 | — | MTIOC7A | GMAC_MDIO / ETHSW_MDIO / ESC_MDIO | — | — | — |
| L5 | — | VSS | — | — | — | — | — | — | — |
| L6 | — | EXTAL | — | — | — | — | — | — | — |
| L7 | — | XTAL | — | — | — | — | — | — | — |
| L8 | — | VSS | — | — | — | — | — | — | — |
| L9 | — | — | P13_2 | — | MTIOC0A / GTIOC10A / POE8# | ETHSW_PTPOUT2 / ESC_I2CCLK / SS1# / CTS1# / RTS1# / IIC_SCL0 | MCLK4 | IRQ5 | — |
| L10 | — | — | P13_4 | — | MTIOC0D / GTIOC8B | ESC_RESETOUT# | — | — | — |
| L11 | — | VSS | — | — | — | — | — | — | — |



Downloaded from Arrow.com.

# 2. Electrical Characteristics

Electrical characteristics of this LSI is defined with the following conditions unless otherwise described.

Conditions:

VDD = 1.05 to 1.15 V

VCC18 = VCC1833_n (1.8-V mode) = VCC18_PLL0 = VCC18_PLL1 = VCC18_USB = AVCC18_USB = VCC18_ADC0 = VCC18_ADC1 = AVCC18_TSU = VREFH0 = VREFH1= 1.70 to 1.95 V

VCC33 = VCC1833_n (3.3-V mode) = VCC33_USB = 3.135 to 3.465 V

VSS = VSS_USB = 0 V

Tj = −40 to 125ºC

## 2.1 Absolute Maximum Ratings

**Table 2.1 Absolute maximum ratings**

| Parameter | Symbol | Value | Unit |
|---|---|---|---|
| Power supply voltage (3.3-V mode) | VCC33,<br>VCC1833_0,<br>VCC1833_1,<br>VCC1833_2,<br>VCC1833_3,<br>VCC1833_4 | −0.3 to +3.8 | V |
| Power supply voltage (1.8-V mode) | (VCC18)<br>VCC1833_0<br>VCC1833_1,<br>VCC1833_2,<br>VCC1833_3,<br>VCC1833_4 | −0.3 to +2.5 | V |
| Power supply voltage | VDD | −0.3 to +1.5 | V |
| Input voltage | Vin (3.3-V logic) | −0.3 to VCC33 + 0.3 | V |
| Input voltage | Vin (1.8-V logic) | −0.3 to VCC18 + 0.3 | V |
| Analog power supply voltage | VCC18_PLL0,<br>VCC18_PLL1,<br>VCC18_USB,<br>AVCC18_USB,<br>VCC18_ADC0,<br>VCC18_ADC1,<br>AVCC18_TSU | −0.3 to smaller value of VCC18[*1] + 0.3 or 2.5 | V |
| | VCC33_USB | −0.3 to smaller value of VCC33 + 0.3 or 3.8 | V |
| Voltage difference between power supply pins | VCC33-VCC18 | -2.5 to + 2.1 | V |
| Analog input voltage | VAN | −0.3 to smaller value of VCC18_ADC0/1 + 0.3 or 2.5 | V |
| Reference voltage | VREFH0, VREFH1 | −0.3 to smaller value of VCC18_ADC0/1 + 0.3 or 2.5 | V |
| Crystal oscillator pins input voltage | XTAL, EXTAL | −0.3 to +1.5 | V |
| Operating temperature (Junction temperature) | $T_j$ | −40 to +125 | °C |
| Storage temperature | $T_{stg}$ | −55 to +125 | °C |

Note 1. For convention, "VCC18" virtually represents any 1.8-V power supplies of the chip such as VCC1833_n in 1.8-V mode.

**Caution: Permanent damage to the LSI might result if absolute maximum ratings are exceeded.**



Downloaded from Arrow.com.

## 2.2 Power Supply

**Table 2.2 Power supply**

| Parameter | Symbol | Value | Min. | Typ. | Max. | Unit |
|---|---|---|---|---|---|---|
| Power supply voltages | VCC33 | | 3.135 | — | 3.465 | V |
| | VDD | | 1.05 | 1.1 | 1.15 | V |
| | VSS | | — | 0 | — | V |
| Power supply voltages supporting multi voltage mode | VCC1833_0, VCC1833_1, VCC1833_2, VCC1833_3, VCC1833_4 | 3.3-V mode | 3.135 | 3.3 | 3.465 | V |
| | | 1.8-V mode (VCC18) | 1.70 | 1.8 | 1.95 | V |
| Analog power supply voltages | VCC18_PLL0 | | — | VCC18 | — | V |
| | VCC18_PLL1 | | — | VCC18 | — | V |
| | VCC33_USB*1 | | — | VCC33 | — | V |
| | VCC18_USB*2 | | — | VCC18 | — | V |
| | AVCC18_USB*2 | | — | VCC18 | — | V |
| | VCC18_ADC0*2 | | — | VCC18 | — | V |
| | VCC18_ADC1*2 | | — | VCC18 | — | V |
| | AVCC18_TSU*2 | | — | VCC18 | — | V |
| | VREFH0 | | VSS | — | VCC18_ADC0 | V |
| | VREFH1 | | VSS | — | VCC18_ADC1 | V |
| | VSS_USB | | — | 0 | — | V |

Note: The condition of A/D conversion characteristics is VREFHn = VCC18_ADCn (n = 0, 1). And power-up/down sequence should follow VCC18_ADCn.
Note 1. Connect this USB power supply pin to VCC33 when the USB is not used. Do not leave this pin open.
Note 2. Connect Analog power supply pins to VCC18 when these analog functions are not used. Do not leave these pins open.

## 2.3 Power On/Off Sequence

Power on/off sequence and timing are shown in the figure and table below.

For power-up, 1.1-V and 1.8-V power (i.e. VDD, VCC18, and AVCC) must be supplied first, then 3.3-V power (i.e. VCC33) must be supplied. The power-up sequence must be completed within 100 ms. Reset signal (i.e. RES#) must be held to Low level during the power-up.

For Power-down, 3.3-V power (i.e. VCC33) must go down first and then 1.1-V and 1.8-V power (i.e. VDD, VCC18, and AVCC). The power-down sequence must be completed within 100 ms.

Rise and fall time of each power supply for the power-up and the power-down must be larger than 10 µs.

Power supply voltages and reset signal must be applied with monotonic increase.

Do not apply a negative voltage to power supply voltages.

Do not apply a voltage to any pins except P07_4 (USB_VBUSIN) until the power supply has powered up.

Stable clock must be supplied to EXTAL/XTAL or EXTCLKIN pin when reset signal (RES#) is driven high.



Downloaded from Arrow.com.

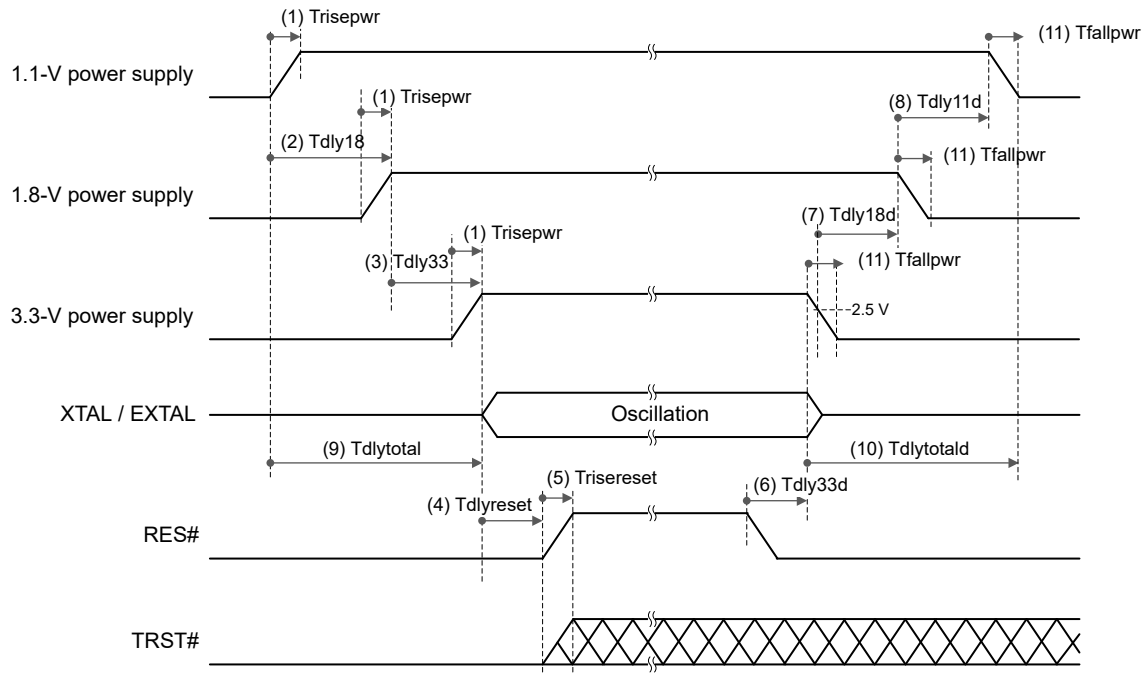


Note:
- When 1.8-V is supplied to VCC1833_n, should follow the 1.8-V power supply sequence. When 3.3-V is supplied to VCC1833_n, should follow the 3.3-V power supply sequence.
- All 3.3-V power supplies must start up the same time.

**Figure 2.1 Power on/off sequence**

**Table 2.3 Power on/off sequence timing**

| No. | Symbol | Description | Value | | |
|---|---|---|---|---|---|
| | | | Min. | Typ. | Max. |
| (1) | Trisepwr | Rising time of the power supply voltage | 10 μs | — | 30 ms |
| (2) | Tdly18 | Delay time from start of rising of the 1.1-V power supply voltage to completion of rising of the 1.8-V power supply voltage | 0 | — | 100 ms |
| (3) | Tdly33 | Delay time from completion of rising of the 1.8-V power supply voltage to completion of rising of the 3.3-V power supply voltage | 0 | — | 100 ms |
| (4) | Tdlyreset | Delay time from completion of rising of the 3.3-V power supply voltage to start of rising of RES# when XTAL/EXTAL is used. | 10 ms | — | — |
| | | Delay time from completion of rising of the 3.3-V power supply voltage to start of rising of RES# when EXTCLKIN is used. | 1 ms | — | — |
| (5) | Trisereset | Rising time of RES# | — | — | 150 μs |
| (6) | Tdly33d | Delay time from start of falling of RES# to start of falling of the 3.3-V power supply voltage | 10 μs | — | — |
| (7) | Tdly18d | Delay time from the time when the 3.3-V power supply voltage drops below 2.5 V to start of falling of the 1.8-V power supply voltage | 0 | — | 100 ms |
| (8) | Tdly11d | Delay time from start of falling of the 1.8-V power supply voltage to start of falling of the 1.1-V power supply voltage | 0 | — | 100 ms |
| (9) | Tdlytotal | Startup time of all power supply voltage | — | — | 100 ms |
| (10) | Tdlytotald | Shut down time of all power supply voltage | — | — | 100 ms |
| (11) | Tfallpwr | Falling time of the power supply voltage | 10 μs | — | 30 ms |



Downloaded from Arrow.com.

## 2.4 DC Characteristics

**Table 2.4 DC Characteristics (3.3-V mode)**

| Item | Symbol | Conditions | Min. | Typ. | Max. | Unit |
|---|---|---|---|---|---|---|
| Input High-level voltage | $V_{IH33}$ | 3.3-V mode, Schmitt Trigger Control Disabled, Except P07_4 pin | 2.0 | — | VCC33 + 0.3 | V |
| Input Low-level voltage | $V_{IL33}$ | | −0.3 | — | 0.8 | V |
| Positive trigger voltage | $V_{T33+}$ | 3.3-V mode, Schmitt Trigger Control Enabled, Except P07_4 pin | 0.9 | — | 2.1 | V |
| Negative trigger voltage | $V_{T33-}$ | | 0.7 | — | 1.9 | V |
| Hysteresis voltage | $\Delta V_{T33}$ | | 0.2 | — | — | V |
| Input High-level voltage 2 | $V_{IH33_2}$ | 3.3-V mode, Schmitt Trigger Control Disabled, P07_4 pin ONLY | VCC33 × 0.7 | — | VCC33 + 0.3 | V |
| Input Low-level voltage 2 | $V_{IL33_2}$ | | -0.3 | — | VCC33 × 0.3 | V |
| Positive trigger voltage 2 | $V_{T33+_2}$ | 3.3-V mode, Schmitt Trigger Control Enabled, P07_4 pin ONLY | — | — | VCC33 × 0.72 | V |
| Negative trigger voltage 2 | $V_{T33-_2}$ | | VCC33 × 0.3 | — | — | V |
| Hysteresis voltage 2 | $\Delta V_{T33_2}$ | | VCC33 × 0.1 | — | — | V |
| Output High-level voltage | $V_{OH33}$ | Low, IOH = −2 mA | VCC33 − 0.4 | — | — | V |
| | $V_{OH33}$ | Middle, IOH = −4 mA | VCC33 − 0.4 | — | — | V |
| | $V_{OH33}$ | High, IOH = −8 mA | VCC33 − 0.4 | — | — | V |
| | $V_{OH33}$ | Ultra High, IOH = −12 mA | VCC33 − 0.4 | — | — | V |
| Output Low-level voltage | $V_{OL33}$ | Low, IOL = 2 mA | — | — | 0.4 | V |
| | $V_{OL33}$ | Middle, IOL = 4 mA | — | — | 0.4 | V |
| | $V_{OL33}$ | High, IOL = 8 mA | — | — | 0.4 | V |
| | $V_{OL33}$ | Ultra High, IOL = 12 mA | — | — | 0.4 | V |
| Input leakage current | $\|I_{in}\|$ | Vin = 0 V, Vin = VCC33 | — | — | 10 | μA |
| Three-State leakage current (off state) | $\|I_{TSI}\|$ | Vin = 0 V, Vin = VCC33 | — | — | 10 | μA |
| Input Pull-up resistors resistance | Rpu | Vin = 0 V | 15 | — | 300 | kΩ |
| Input Pull-up resistors current | Ipu | Vin = 0 V | -220 | — | -11 | μA |
| Input Pull-down resistors resistance | Rpd | Vin = VCC33 | 15 | — | 300 | kΩ |
| Input Pull-down resistors current | Ipd | Vin = VCC33 | 11 | — | 220 | μA |
| Input Capacitance | Cin | All input/output and input pins | — | — | 10 | pF |

**Table 2.5 DC Characteristics (1.8-V mode) (1 of 2)**

| Item | Symbol | Conditions | Min. | Typ. | Max. | Unit |
|---|---|---|---|---|---|---|
| Input High-level voltage | $V_{IH18}$ | 1.8-V mode, Schmitt Trigger Control Disabled | VCC18 × 0.65 | — | VCC18 + 0.3 | V |
| Input Low-level voltage | $V_{IL18}$ | | −0.3 | — | VCC18 × 0.35 | V |
| Positive trigger voltage | $V_{T18+}$ | 1.8-V mode, Schmitt Trigger Control Enabled | VCC18 × 0.4 | — | VCC18 × 0.7 | V |
| Negative trigger voltage | $V_{T18-}$ | | VCC18 × 0.3 | — | VCC18 × 0.6 | V |
| Hysteresis voltage | $\Delta V_{T18}$ | | VCC18 × 0.1 | — | — | V |
| Output High-level voltage | $V_{OH18}$ | Low, IOH = −2 mA | VCC18 − 0.45 | — | — | V |
| | $V_{OH18}$ | Middle, IOH = −4 mA | VCC18 − 0.45 | — | — | V |
| | $V_{OH18}$ | High, IOH = −8 mA | VCC18 − 0.45 | — | — | V |
| | $V_{OH18}$ | Ultra High, IOH = −12 mA | VCC18 − 0.45 | — | — | V |



Downloaded from Arrow.com.

**Table 2.5 DC Characteristics (1.8-V mode) (2 of 2)**

| Item | Symbol | Conditions | Min. | Typ. | Max. | Unit |
|---|---|---|---|---|---|---|
| Output Low-level voltage | $V_{OL18}$ | Low, IOL = 2 mA | — | — | 0.45 | V |
| | $V_{OL18}$ | Middle, IOL = 4 mA | — | — | 0.45 | V |
| | $V_{OL18}$ | High, IOL = 8 mA | — | — | 0.45 | V |
| | $V_{OL18}$ | Ultra High, IOL = 12 mA | — | — | 0.45 | V |
| Input leakage current | \|Iin\| | Vin = 0 V, Vin = VCC18 | — | — | 10 | μA |
| Three-State leakage current (off state) | $\|I_{TSI}\|$ | Vin = 0 V, Vin = VCC18 | — | — | 10 | μA |
| Input Pull-up resistors resistance | Rpu | Vin = 0 V | 15 | — | 300 | kΩ |
| Input Pull-up resistors current | Ipu | Vin = 0 V | -120 | — | -6 | μA |
| Input Pull-down resistors resistance | Rpd | Vin = VCC18 | 15 | — | 300 | kΩ |
| Input Pull-down resistors current | Ipd | Vin = VCC18 | 6 | — | 120 | μA |
| Input Capacitance | Cin | All input/output and input pins | — | — | 10 | pF |

**Table 2.6 USB2.0 USB_RREF Pin**

| Item | Symbol | Conditions | Min. | Typ. | Max. | Unit |
|---|---|---|---|---|---|---|
| Reference resistor*1 | $R_{REF}$ | — | | 1.8 (±1%) | | kΩ |

Note 1. The reference resistor connected to the USB_RREF pin is for external connection to this LSI.

**Table 2.7 USB2.0 Pull-Up/Pull-Down Resistors**

| Item | Symbol | Conditions | Min. | Typ. | Max. | Unit |
|---|---|---|---|---|---|---|
| USB_DP pull-up resistor (when the function controller is selected) | $R_{PU}$ | Idle | 0.900 | — | 1.575 | kΩ |
| | | Transmission/reception | 1.425 | — | 3.090 | kΩ |
| USB_DP/USB_DM pull-down resistors (when the host controller is selected) | $R_{PD}$ | — | 14.25 | — | 24.80 | kΩ |

**Table 2.8 USB2.0 Host/Function-Related Pins (Low/Full Speed)**

| Item | Symbol | Conditions | Min. | Typ. | Max. | Unit |
|---|---|---|---|---|---|---|
| Input high level voltage | $V_{FSIH}$ | — | 2.0 | — | — | V |
| Input low level voltage | $V_{FSIL}$ | — | — | — | 0.8 | V |
| Differential input sensitivity | $V_{FSDI}$ | \|(USB_DP) − (USB_DM)\| | 0.2 | — | — | V |
| Differential common mode range | $V_{FSCM}$ | — | 0.8 | — | 2.5 | V |
| Output low level voltage | $V_{FSOL}$ | IFSOL = 2 mA | 0.0 | — | 0.3 | V |
| Output high level voltage | $V_{FSOH}$ | IFSOH = −200 μA | 2.8 | — | 3.6 | V |
| Output signal crossover voltage | $V_{FSCRS}$ | — | 1.3 | — | 2.0 | V |

**Table 2.9 USB2.0 Host/Function-Related Pins (High Speed) (1 of 2)**

| Item | Symbol | Conditions | Min. | Typ. | Max. | Unit |
|---|---|---|---|---|---|---|
| Squelch detection threshold voltage (differential voltage) | $V_{HSSQ}$ | — | 100 | — | 150 | mV |
| Disconnection detection threshold voltage (differential voltage) | $V_{HSDSC}$ | — | 525 | — | 625 | mV |
| Common mode voltage range | $V_{HSCM}$ | — | −50 | — | 500 | mV |
| Idle state | $V_{HSOI}$ | — | −10.0 | — | 10.0 | mV |
| Output high level voltage | $V_{HSOH}$ | — | 360 | — | 440 | mV |



Downloaded from Arrow.com.

**Table 2.9 USB2.0 Host/Function-Related Pins (High Speed) (2 of 2)**

| Item | Symbol | Conditions | Min. | Typ. | Max. | Unit |
|---|---|---|---|---|---|---|
| Output low level voltage | $V_{HSOL}$ | — | −10.0 | — | 10.0 | mV |
| Chirp J output voltage (differential) | $V_{CHIRPJ}$ | — | 700 | — | 1100 | mV |
| Chirp K output voltage (differential) | $V_{CHIRPK}$ | — | −900 | — | −500 | mV |

**Table 2.10 Supply Current**

| Item | Symbol | Conditions | Min. | Typ. | Max. | Unit |
|---|---|---|---|---|---|---|
| Normal operation | $I_{vdd}$ | ICLK = 200 MHz,<br>CPU0CLK = 400 MHz, Tj ≤ 110°C | — | — | 310 | mA |
| | $I_{VCC33}$ | *1 | — | 25 | — | mA |
| | $I_{VCC1833_0}$ | *1 | — | 9 | — | mA |
| | $I_{VCC1833_1}$ | *1 | — | 9 | — | mA |
| | $I_{VCC1833_2}$ | *1 | — | 9 | — | mA |
| | $I_{VCC1833_3}$ | *1 | — | 9 | — | mA |
| | $I_{VCC1833_4}$ | *1 | — | 9 | — | mA |
| | $I_{VCC18_PLL0}$ | — | — | — | 6 | mA |
| | $I_{VCC18_PLL1}$ | — | — | — | 6 | mA |
| | $I_{VCC18_USB}$ | — | — | — | 39 | mA |
| | $I_{VCC18_ADC0}$ | — | — | — | 3 | mA |
| | $I_{VCC18_ADC1}$ | — | — | — | 3 | mA |
| | $I_{VCC18_TSU}$ | | — | — | 2 | mA |
| | $I_{VCC33_USB}$ | — | — | — | 6 | mA |
| Low power consumption mode*2 | $I_{vdd}$ | All modules inactive | — | 6 | — | mA |
| | $I_{VCC33}$ | — | — | 6 | — | mA |
| | $I_{VCC1833_0}$ | — | — | 2 | — | mA |
| | $I_{VCC1833_1}$ | — | — | 2 | — | mA |
| | $I_{VCC1833_2}$ | — | — | 2 | — | mA |
| | $I_{VCC1833_3}$ | — | — | 2 | — | mA |
| | $I_{VCC1833_4}$ | — | — | 2 | — | mA |
| | $I_{VCC18_PLL0}$ | — | — | 3.5 | — | mA |
| | $I_{VCC18_PLL1}$ | — | — | 0.1 | — | mA |
| | $I_{VCC18_USB}$ | — | — | 0.5 | — | mA |
| | $I_{VCC18_ADC0}$ | — | — | 0.2 | — | mA |
| | $I_{VCC18_ADC1}$ | — | — | 0.2 | — | mA |
| | $I_{VCC18_TSU}$ | — | — | 0.1 | — | mA |
| | $I_{VCC33_USB}$ | — | — | 0.3 | — | mA |

Note: These values are reference values. The actual operating current greatly depends on the system (such as unsharpened waveforms due to I/O load and toggle frequency). Be sure to measure these current values in the system.

Note 1. IO supply current ($I_{VCC33}$, $I_{VCC1833_n\ (n = 0\ to\ 4)}$) should be 80 mA or less. (ΣIOH in Table 2.11)

Note 2. All applicable modules are stopped or standby mode with the lowest clock frequency setting, no pull-up/down or operation for all I/O ports, and room temperature.



Downloaded from Arrow.com.

**Table 2.11 Permissible Output Currents**

| Item | Symbol | Conditions | Min. | Typ. | Max. | Unit |
|---|---|---|---|---|---|---|
| Permissible output low current (max. value per pin) | IOL | All output pins | — | — | 12 | mA |
| Permissible output low current (total) | ΣIOL | Sum of all output pins | — | — | 80 | mA |
| Permissible output high current (max. value per pin) | IOH | All output pins | — | — | -12 | mA |
| Permissible output high current (total) | ΣIOH | Sum of all output pins | — | — | -80 | mA |

Note: All output current values shall be within the values in this table to ensure the reliability of this LSI.

**Table 2.12 Thermal Resistance value (Reference)**

| Item | Symbol | Package | Max. | Unit |
|---|---|---|---|---|
| Thermal Resistance | Θja | 225 pin FBGA 13 × 13 mm, 0.8-mm pitch | 30.1 | °C/W |
| | | 121 pin FBGA 10 × 10 mm, 0.8-mm pitch | 30.5 | °C/W |
| | Ψjt | 225 pin FBGA 13 × 13 mm, 0.8-mm pitch | 0.42 | °C/W |
| | | 121 pin FBGA 10 × 10 mm, 0.8-mm pitch | 0.42 | °C/W |

Note: Package thermal resistance values above are based on EIA/JESD51-9 (2s2p) condition and reference only.

## 2.5 AC Characteristics

**Table 2.13 Operating frequency**

| Parameter | | Symbol | Min. | Max. | Unit |
|---|---|---|---|---|---|
| Operating frequency | CPU clock (CPU0CLK) | f | 150<br>200 | 300<br>400 | MHz |
| | System clock (ICLK) | | 150 | 200 | |
| | Peripheral module clock H (PCLKH) | | 150 | 200 | |
| | Peripheral module clock M (PCLKM) | | 75 | 100 | |
| | Peripheral module clock L (PCLKL) | | 37.5 | 50 | |
| | Peripheral module clock for ADC (PCLKADC) | | 18.75 | 25 | |
| | Peripheral module clock for SCIn (PCLKSCIn, n = 0 to 5) | | 75 | 100 | |
| | Peripheral module clock for SPIn (PCLKSPIn, n = 0 to 3) | | 75 | 100 | |
| | External bus clock output (CKIO) | | 18.75 | 100 | |
| | Ethernet PHY reference clock (ETHn_REFCLK, n = 0 to 2) | | 25 | | |
| | Ethernet PHY reference clock (RMIIn_REFCLK, n = 0 to 2) | | 50 | | |

AC Characteristics are defined in condition of the IO setting (DRCTLm register setting) show in Table 2.14.

**Table 2.14 IO setting (DRCTLm register setting) condition (1 of 2)**

| Module | Signal | | IO type | Voltage | DRCTLm register | | |
|---|---|---|---|---|---|---|---|
| | | | | | DRVn | SRn | SMTn |
| Bus | CKIO | SDRAM and High drive | — | 3.3 V | High | Fast | — |
| | | Other than the above | — | 3.3 V | Middle | Fast | — |
| | Other than the above | | Type A | 3.3 V | Middle | Slow | Disable |
| | | | Type B | 3.3 V | Low | Slow | Disable |
| DMAC, MTU3, IIC, CANFD, DSMIF | All signals | | Type A | 3.3 V | Middle | Slow | Disable |
| | | | Type B | 3.3 V | Low | Slow | Disable |



Downloaded from Arrow.com.

**Table 2.14 IO setting (DRCTLm register setting) condition (2 of 2)**

| Module | Signal | IO type | Voltage | DRCTLm register | | |
|---|---|---|---|---|---|---|
| | | | | DRVn | SRn | SMTn |
| GPT (n = 0 to 17) (m = 0, 1) | GTIOCnA, GTIOCnB | Type A | 3.3 V | Middle | Slow | Disable |
| | | Type B | 3.3 V | Low | Slow | Disable |
| | GTADSMLm, GTADSMPm | — | 3.3 V | Low | Slow | Disable |
| SCI, SPI | All signals | — | 3.3 V | High | Fast | Disable |
| xSPI (n = 0, 1; m = 0, 1) | XSPIn_CKP, XSPIn_CKN, XSPIn_IO[7:0], XSPIn_CSm#, XSPIn_DS | — | 1.8 V | High | Fast | Disable |
| | | — | 3.3 V | High | Fast | Enable |
| | Other than the above | — | — | Low | Slow | Disable |
| Ethernet Interface (n = 0 to 2) | ETHn_TXCLK, ETHn_TXD[3:0] | — | 1.8 V/3.3 V | High | Fast | Disable |
| | ETHn_TXER | — | 3.3 V | Middle | Fast | — |
| | ETHn_RXCLK, ETHn_RXD[3:0] | — | 1.8 V/3.3 V | — | — | Disable |
| | ETHn_RXER, ETHn_COL, ETHn_CRS | — | 3.3 V | — | — | Disable |
| | ETHn_REFCLK, RMIIn_REFCLK | — | 3.3 V | High | Fast | — |
| | Other than the above | — | — | Low | Slow | Disable |
| SHOSTIF | HSPI_CK, HSPI_CS#, HSPI_IO[7:0] | — | 1.8 V/3.3 V | High | Fast | Disable |
| | HSPI_INT# | — | 1.8 V/3.3 V | Low | Slow | Disable |
| PHOSTIF | All signals | Type A | 3.3 V | Middle | Slow | Disable |
| | | Type B | 3.3 V | Low | Slow | Disable |
| Debug Interface | TRACECLK, TRACECTL, TRACEDATA [7:0], TDO, TMS | — | 3.3 V | High | Fast | Disable |
| | Other than the above | — | — | Low | Slow | Disable |
| Other than the above | | — | — | Low | Slow | Disable |

## 2.5.1 Clock Timing

### 2.5.1.1 CKIO Pin Output Timing

**Table 2.15 CKIO pin output timing**

| Parameter | Symbol | Conditions | Min. | Typ. | Max. | Unit |
|---|---|---|---|---|---|---|
| CKIO pin output cycle time | $t_{CKcyc}$ | Figure 2.2 | 10 | — | 53.4 | ns |
| CKIO pin output high level pulse width | $t_{CKH}$ | | $t_{CKcyc}$ / 2 − $t_{CKr}$ | — | — | ns |
| CKIO pin output low level pulse width | $t_{CKL}$ | | $t_{CKcyc}$ / 2 − $t_{CKf}$ | — | — | ns |
| CKIO pin output rising time 1 | $t_{CKr}$ | CKIO: High drive output Setting | — | — | 3.8 | ns |
| CKIO pin output falling time 1 | $t_{CKf}$ | | — | — | 3.8 | ns |
| CKIO pin output rising time 2 | $t_{CKr}$ | CKIO: Normal output setting | — | — | 9 | ns |
| CKIO pin output falling time 2 | $t_{CKf}$ | | — | — | 9 | ns |



Downloaded from Arrow.com.

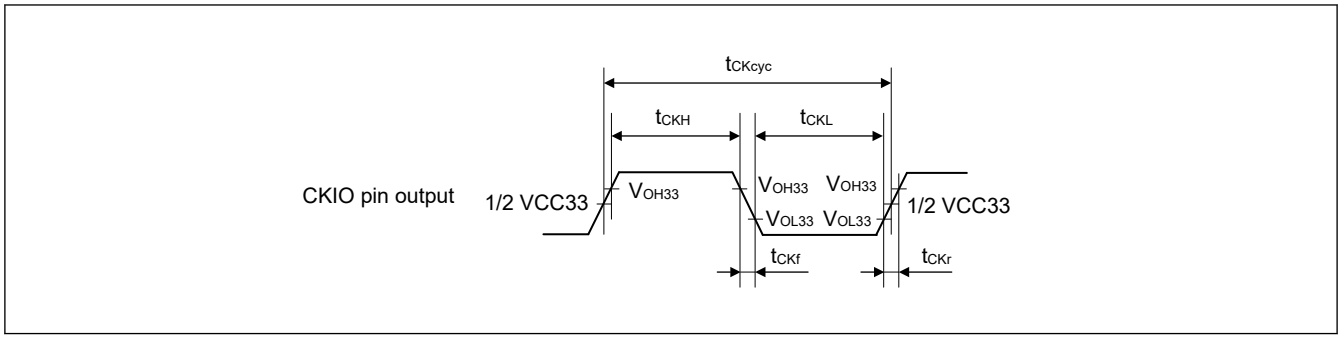


**Figure 2.2 CKIO pin output timing**

### 2.5.1.2 Ethernet PHY Reference Clock Output Timing

Conditions:

C = 30 pF (ETHn_REFCLK)

C = 20 pF (RMIIn_REFCLK)

**Table 2.16 Ethernet PHY reference clock output timing**

| Parameter | Symbol | Conditions | Min. | Typ. | Max. | Unit |
|---|---|---|---|---|---|---|
| ETHn_REFCLK cycle time | $t_{CK}$ | — | 40 | — | — | ns |
| ETHn_REFCLK frequency | — | — | 25.00 ± 50 ppm | | | MHz |
| | | EtherCAT in use | 25.00 ± 25 ppm | | | MHz |
| ETHn_REFCLK duty | — | — | 45 | — | 55 | % |
| ETHn_REFCLK rising/falling time | $t_{CKr}$ / $t_{CKf}$ | — | 0.5 | — | 4.0 | ns |
| RMIIn_REFCLK cycle time | $t_{CK}$ | — | 20 | — | — | ns |
| RMIIn_REFCLK frequency | — | — | 50.00 ± 50 ppm | | | MHz |
| RMIIn_REFCLK duty | — | — | 45 | — | 55 | % |
| RMIIn_REFCLK rising/falling time | $t_{CKr}$ / $t_{CKf}$ | — | 0.5 | — | 3.5 | ns |

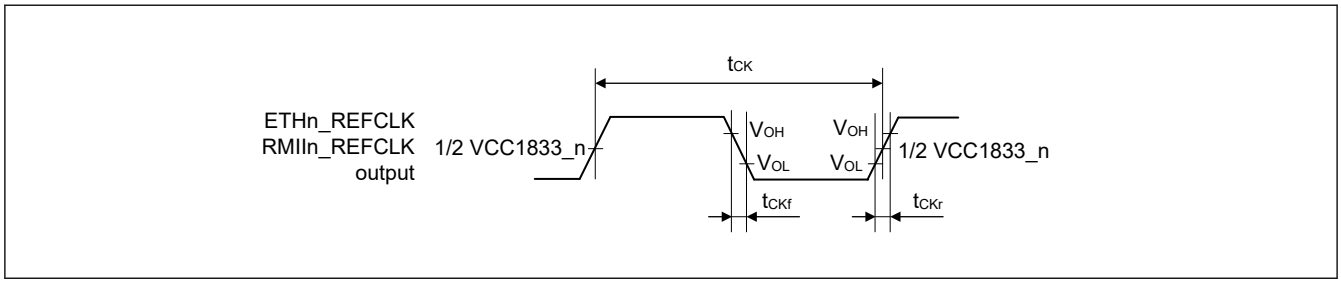


**Figure 2.3 Ethernet PHY reference clock output timing**

### 2.5.1.3 EXTCLKIN External Clock Input

**Table 2.17 EXTCLKIN clock timing**

| Parameter | Symbol | Conditions | Min. | Typ. | Max. | Unit |
|---|---|---|---|---|---|---|
| EXTCLKIN external clock frequency | $f_{EXTCLKIN}$ | — | 25.00 ± 50 ppm | | | MHz |
| | | EtherCAT in use | 25.00 ± 25 ppm | | | MHz |
| EXTCLKIN duty | $r_{EXTCLKIN}$ | — | ±5% | | | — |
| EXTCLKIN rising time | $t_{rEXTCLKIN}$ | — | 0 | — | 5 | ns |
| EXTCLKIN falling time | $t_{fEXTCLKIN}$ | — | 0 | — | 5 | ns |

Note: When using crystal resonator (i.e. EXTAL/XTAL clock is used), EXTCLKIN should be driven low.



Downloaded from Arrow.com.

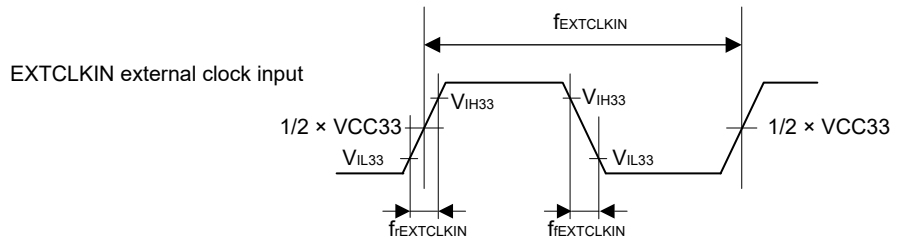


**Figure 2.4 EXTCLKIN external clock input timing**

### 2.5.1.4 EXTAL/XTAL Clock Timing

**Table 2.18 EXTAL/XTAL clock timing**

| Parameter | Symbol | Conditions | Min. | Typ. | Max. | Unit |
|---|---|---|---|---|---|---|
| EXTAL/XTAL clock frequency*1 | $f_{XTAL}$ | — | | 25.00 ± 50 ppm | | MHz |
| | | EtherCAT in use | | 25.00 ± 25 ppm | | MHz |

Note: When using an external oscillator, be sure to leave XTAL open-circuit and make sure that EXTAL is driven low.
Note 1. When using the EXTAL/XTAL clock (i.e. crystal resonator), ask the oscillator manufacturer to evaluate oscillation of the oscillator. For the oscillation stabilization time, see the evaluation result provided by the oscillator manufacturer.

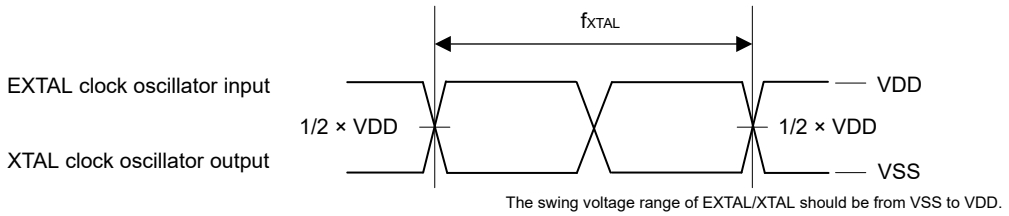


**Figure 2.5 EXTAL clock oscillator input and XTAL clock oscillator output timing**

### 2.5.1.5 LOCO Clock Timing

**Table 2.19 LOCO clock timing**

| Parameter | Symbol | Conditions | Min. | Typ. | Max. | Unit |
|---|---|---|---|---|---|---|
| LOCO clock cycle time | $t_{Lcyc}$ | — | 4.62 | 4.17 | 3.79 | μs |
| LOCO clock oscillation frequency | $t_{LOCO}$ | — | 216 | 240 | 264 | kHz |
| LOCO clock oscillation stabilization wait time | $t_{LOCOWT}$ | — | — | — | 40 | μs |

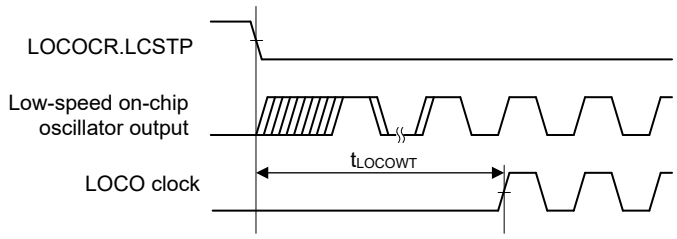


**Figure 2.6 LOCO clock oscillation start timing**



Downloaded from Arrow.com.

### 2.5.2 Reset, Interrupt, and Mode Timing

**Table 2.20 Reset, interrupt, and mode timing**

| Parameter | | Symbol | Conditions | Min. | Typ. | Max. | Unit |
|---|---|---|---|---|---|---|---|
| RES# pulse width | At power on | $t_{dlyreset}$ | Figure 2.7 | 10 | — | — | ms |
| | Other than above | $t_{dlyreset2}$ | | 1 | — | — | ms |
| RES# rising time | | $t_{risereset}$ | | — | — | 150 | μs |
| TRST# pulse width | At power on | $t_{dlyreset}$ | | 10 | — | — | ms |
| | Other than above | $t_{dlyreset2}$ | | 1 | — | — | ms |
| TRST# rising time | | $t_{risereset}$ | | — | — | 150 | μs |
| NMI pulse width | Level detection | $t_{NMIW}$ | Figure 2.8 | $t_{Icyc} \times 2$ *1 | — | — | ns |
| | Edge detection | | | $t_{PMcyc} \times 3.5$ *2 *3 | — | — | ns |
| IRQ pulse width | Level detection | $t_{IRQW}$ | Figure 2.9 | $t_{Icyc} \times 2$ *1 | — | — | ns |
| | Edge detection | | | $t_{PMcyc} \times 3.5$ *2 *3 | — | — | ns |
| Mode hold time (to RES#) | At power on | $t_{MDH}$ | Figure 2.10 | 250 | — | — | ns |

Note 1. $t_{Icyc}$: ICLK cycle
Note 2. $t_{PMcyc}$: PCLKM cycle
Note 3. This value is when noise filter sampling frequency divided rate is 1. In other cases, it is [clock division rate] × $t_{PMcyc}$ × 3.5.

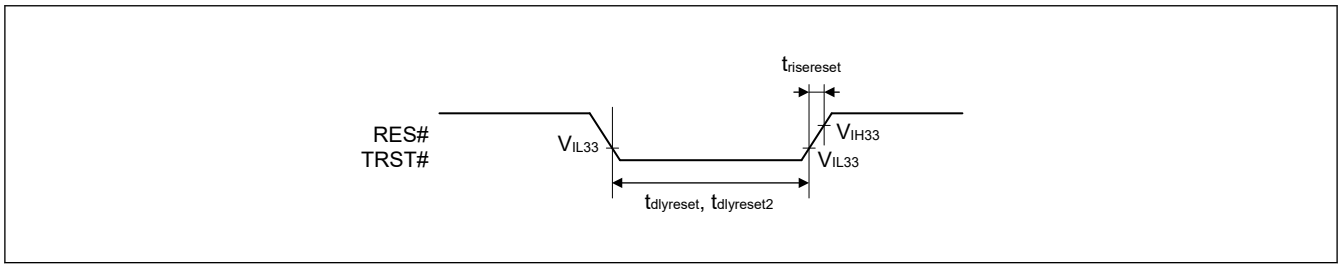


**Figure 2.7 Reset input timing**

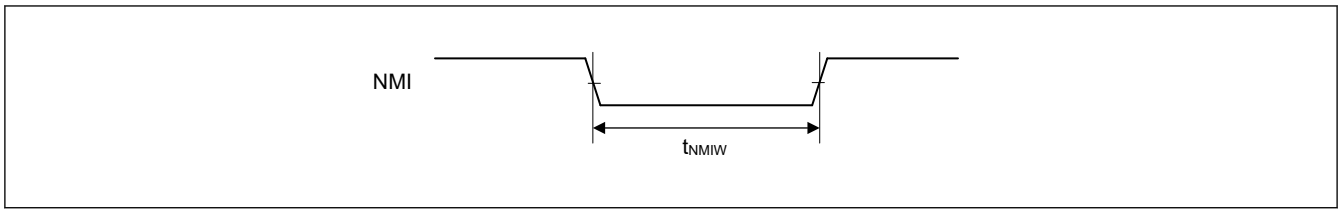


**Figure 2.8 NMI interrupt input timing**

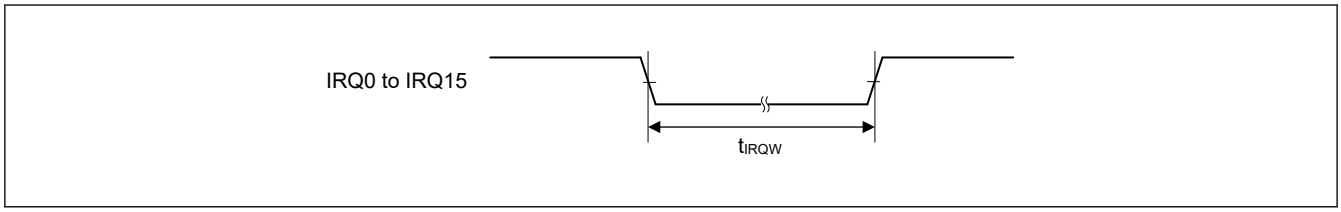


**Figure 2.9 IRQ interrupt input timing**



Downloaded from Arrow.com.

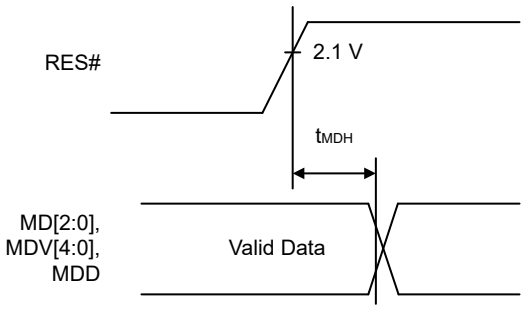


**Figure 2.10 Mode input timing**

## 2.5.3 Bus Timing

**Table 2.21 Bus timing (1 of 2)**

Conditions: $V_{OH}$ = VCC33 × 0.5, $V_{OL}$ = VCC33 × 0.5, C = 15 pF (CKIO), 30 pF (others), $T_j$min = −40°C

| Parameter | | Symbol | CKIO = 1/$t_{CKcyc}$ *1 (Max 66 MHz) Min. | Max. | Unit | Reference Figure |
|---|---|---|---|---|---|---|
| Address delay time 1 | SDRAM*2 | $t_{AD1}$ | 2 | 11 | ns | Figure 2.11 to Figure 2.35 |
| | Other than the above | | 0 | 10 | ns | |
| Address delay time 2 | | $t_{AD2}$ | 1/2$t_{CKcyc}$ | 1/2$t_{CKcyc}$ + 10 | ns | Figure 2.18 |
| Address setup time | | $t_{AS}$ | 0 | — | ns | Figure 2.11 to Figure 2.14, Figure 2.18 |
| Chip enable setup time | | $t_{CS}$ | 0 | — | ns | Figure 2.11 to Figure 2.14, Figure 2.18 |
| Address hold time | | $t_{AH}$ | 0 | — | ns | Figure 2.11 to Figure 2.14 |
| BS delay time | | $t_{BSD}$ | — | 11 | ns | Figure 2.11 to Figure 2.32 |
| CSn# delay time 1 | SDRAM*2 | $t_{CSD1}$ | 2 | 11 | ns | Figure 2.11 to Figure 2.35 |
| | Other than the above | | 0 | 10 | ns | |
| Read/write delay time 1 | SDRAM*2 | $t_{RWD1}$ | 2 | 11 | ns | Figure 2.11 to Figure 2.35 |
| | Other than the above | | 0 | 10 | ns | |
| Read strobe delay time | | $t_{RSD}$ | 1/2$t_{CKcyc}$ | 1/2$t_{CKcyc}$ + 10 | ns | Figure 2.11 to Figure 2.18 |
| Read data setup time 1*3 | High-drive output | $t_{RDS1}$ | 1/2$t_{CKcyc}$ + 4 | — | ns | Figure 2.11 to Figure 2.17 |
| | Normal output | | 1/2$t_{CKcyc}$ + 7 | — | ns | |
| Read data setup time 2*3 | High-drive output | $t_{RDS2}$ | 6.6 | — | ns | Figure 2.19 to Figure 2.22, Figure 2.27 to Figure 2.29 |
| Read data setup time 3*3 | High-drive output | $t_{RDS3}$ | 1/2$t_{CKcyc}$ + 4 | — | ns | Figure 2.18 |
| | Normal output | | 1/2$t_{CKcyc}$ + 7 | — | ns | |
| Read data hold time 1 | | $t_{RDH1}$ | 0 | — | ns | Figure 2.11 to Figure 2.17 |
| Read data hold time 2 | | $t_{RDH2}$ | 2.5 | — | ns | Figure 2.19 to Figure 2.22, Figure 2.27 to Figure 2.29 |
| Read data hold time 3 | | $t_{RDH3}$ | 0 | — | ns | Figure 2.18 |
| Write enable delay time 1 | | $t_{WED1}$ | 1/2$t_{CKcyc}$ | 1/2$t_{CKcyc}$ + 10 | ns | Figure 2.11 to Figure 2.16 |
| Write enable delay time 2 | | $t_{WED2}$ | — | 11 | ns | Figure 2.17 |
| Write data delay time 1 | | $t_{WDD1}$ | — | 11 | ns | Figure 2.11 to Figure 2.17 |



Downloaded from Arrow.com.

**Table 2.21 Bus timing (2 of 2)**

Conditions: $V_{OH}$ = VCC33 × 0.5, $V_{OL}$ = VCC33 × 0.5, C = 15 pF (CKIO), 30 pF (others), $T_j$min = −40°C

| Parameter | | Symbol | CKIO = 1/$t_{CKcyc}$ *1 (Max 66 MHz) Min. | Max. | Unit | Reference Figure |
|---|---|---|---|---|---|---|
| Write data delay time 2 | | $t_{WDD2}$ | — | 11 | ns | Figure 2.23 to Figure 2.26, Figure 2.30 to Figure 2.32 |
| Write data hold time 1 | | $t_{WDH1}$ | 1 | — | ns | Figure 2.11 to Figure 2.17 |
| Write data hold time 2 | | $t_{WDH2}$ | 2 | — | ns | Figure 2.23 to Figure 2.26, Figure 2.30 to Figure 2.32 |
| Write data hold time 4 | | $t_{WDH4}$ | 0 | — | ns | Figure 2.11 to Figure 2.15 |
| WAIT# setup time*3 | High-drive output | $t_{WTS}$ | 1/2$t_{CKcyc}$ + 4.5 | — | ns | Figure 2.12 to Figure 2.18 |
| | Normal output | | 1/2$t_{CKcyc}$ + 8 | — | ns | |
| WAIT# hold time | | $t_{WTH}$ | 1/2$t_{CKcyc}$ + 3.5 | — | ns | Figure 2.12 to Figure 2.18 |
| RAS# delay time 1 | | $t_{RASD1}$ | 2 | 11 | ns | Figure 2.19 to Figure 2.35 |
| CAS# delay time 1 | | $t_{CASD1}$ | 2 | 11 | ns | Figure 2.19 to Figure 2.35 |
| DQM delay time 1 | | $t_{DQMD1}$ | 2 | 11 | ns | Figure 2.19 to Figure 2.32 |
| CKE delay time 1 | | $t_{CKED1}$ | 2 | 11 | ns | Figure 2.34 |
| AH# delay time | | $t_{AHD}$ | 1/2$t_{CKcyc}$ | 1/2$t_{CKcyc}$ + 10 | ns | Figure 2.15 |
| Multiplex address delay time | | $t_{MAD}$ | — | 10 | ns | Figure 2.15 |
| Multiplex address hold time | | $t_{MAH}$ | 1 | — | ns | Figure 2.15 |
| Address setup time to AH# | | $t_{AVVH}$ | 1/2$t_{CKcyc}$ − 2 | — | ns | Figure 2.15 |
| DACK/TEND delay time | | $t_{DACD}$ | See section 2.5.4. DMAC Timing | | ns | Figure 2.11 to Figure 2.32 |

Note: Notation of 1/2$t_{CKcyc}$ in the delay time, setup time, and hold time shows 1/2 cycles from the clock rising edge, that is, the reference of clock falling.

Note 1. Take the number of cycles of waiting that suits the system configuration into consideration with regard to the fmax value for CKIO (the external bus clock). When CKIO is running at 50 MHz or a higher frequency, select high drive output.

Note 2. These are values when SDRAM (CSnBCR.TYPE[2:0] = 100b) is selected in the CSn space bus control register (CSnBCR) and high-drive output is selected for CKIO.

Note 3. These are values when high-drive output and normal output are respectively selected for CKIO.

**Table 2.22 Bus timing (1 of 2)**

Conditions: $V_{OH}$ = VCC33 × 0.5, $V_{OL}$ = VCC33 × 0.5, C = 12 pF (CKIO), 12 pF (others), $T_j$min = −20°C

| Parameter | | Symbol | CKIO = 1/$t_{CKcyc}$ *1 (Max 100 MHz) Min. | Max. | Unit | Reference Figure |
|---|---|---|---|---|---|---|
| Address delay time 1 | SDRAM*2 | $t_{AD1}$ | 1.3 | 8 | ns | Figure 2.11 to Figure 2.35 |
| | Other than the above | | 0 | 8 | ns | |
| Address delay time 2 | | $t_{AD2}$ | 1/2$t_{CKcyc}$ - 0.5 | 1/2$t_{CKcyc}$ + 8 | ns | Figure 2.18 |
| Address setup time | | $t_{AS}$ | 0 | — | ns | Figure 2.11 to Figure 2.14, Figure 2.18 |
| Chip enable setup time | | $t_{CS}$ | 0 | — | ns | Figure 2.11 to Figure 2.14, Figure 2.18 |
| Address hold time | | $t_{AH}$ | 0 | — | ns | Figure 2.11 to Figure 2.14 |
| BS delay time | | $t_{BSD}$ | — | 8 | ns | Figure 2.11 to Figure 2.32 |
| CSn# delay time 1 | SDRAM*2 | $t_{CSD1}$ | 1.3 | 8 | ns | Figure 2.11 to Figure 2.35 |
| | Other than the above | | 0 | 8 | ns | |



Downloaded from Arrow.com.

**Table 2.22 Bus timing (2 of 2)**

Conditions: $V_{OH}$ = VCC33 × 0.5, $V_{OL}$ = VCC33 × 0.5, C = 12 pF (CKIO), 12 pF (others), $T_j$min = −20°C

| Parameter | | Symbol | CKIO = 1/$t_{CKcyc}$ *1 (Max 100 MHz) Min. | Max. | Unit | Reference Figure |
|---|---|---|---|---|---|---|
| Read/write delay time 1 | SDRAM*2 | $t_{RWD1}$ | 1.3 | 8 | ns | Figure 2.11 to Figure 2.35 |
| | Other than the above | | 0 | 8 | ns | |
| Read strobe delay time | | $t_{RSD}$ | 1/2$t_{CKcyc}$ | 1/2$t_{CKcyc}$ + 8 | ns | Figure 2.11 to Figure 2.18 |
| Read data setup time 1*3 | High-drive output | $t_{RDS1}$ | 1/2$t_{CKcyc}$ + 4.5 | — | ns | Figure 2.11 to Figure 2.17 |
| | Normal output | | 1/2$t_{CKcyc}$ + 7 | — | ns | |
| Read data setup time 2*3 | High-drive output | $t_{RDS2}$ | 3.5 | — | ns | Figure 2.19 to Figure 2.22, Figure 2.27 to Figure 2.29 |
| Read data setup time 3*3 | High-drive output | $t_{RDS3}$ | 1/2$t_{CKcyc}$ + 4.5 | — | ns | Figure 2.18 |
| | Normal output | | 1/2$t_{CKcyc}$ + 7 | — | ns | |
| Read data hold time 1 | | $t_{RDH1}$ | 0 | — | ns | Figure 2.11 to Figure 2.17 |
| Read data hold time 2 | | $t_{RDH2}$ | 2.5 | — | ns | Figure 2.19 to Figure 2.22, Figure 2.27 to Figure 2.29 |
| Read data hold time 3 | | $t_{RDH3}$ | 0 | — | ns | Figure 2.18 |
| Write enable delay time 1 | | $t_{WED1}$ | 1/2$t_{CKcyc}$ | 1/2$t_{CKcyc}$ + 8 | ns | Figure 2.11 to Figure 2.16 |
| Write enable delay time 2 | | $t_{WED2}$ | — | 9 | ns | Figure 2.17 |
| Write data delay time 1 | | $t_{WDD1}$ | — | 8 | ns | Figure 2.11 to Figure 2.17 |
| Write data delay time 2 | | $t_{WDD2}$ | — | 8 | ns | Figure 2.23 to Figure 2.26, Figure 2.30 to Figure 2.32 |
| Write data hold time 1 | | $t_{WDH1}$ | 1 | — | ns | Figure 2.11 to Figure 2.17 |
| Write data hold time 2 | | $t_{WDH2}$ | 1.3 | — | ns | Figure 2.23 to Figure 2.26, Figure 2.30 to Figure 2.32 |
| Write data hold time 4 | | $t_{WDH4}$ | 0 | — | ns | Figure 2.11 to Figure 2.15 |
| WAIT# setup time*3 | High-drive output | $t_{WTS}$ | 1/2$t_{CKcyc}$ + 4.5 | — | ns | Figure 2.12 to Figure 2.18 |
| | Normal output | | 1/2$t_{CKcyc}$ + 8 | — | ns | |
| WAIT# hold time | | $t_{WTH}$ | 1/2$t_{CKcyc}$ + 3.5 | — | ns | Figure 2.12 to Figure 2.18 |
| RAS# delay time 1 | | $t_{RASD1}$ | 1.3 | 8 | ns | Figure 2.19 to Figure 2.35 |
| CAS# delay time 1 | | $t_{CASD1}$ | 1.3 | 8 | ns | Figure 2.19 to Figure 2.35 |
| DQM delay time 1 | | $t_{DQMD1}$ | 1.3 | 8 | ns | Figure 2.19 to Figure 2.32 |
| CKE delay time 1 | | $t_{CKED1}$ | 1.3 | 8 | ns | Figure 2.34 |
| AH# delay time | | $t_{AHD}$ | 1/2$t_{CKcyc}$ | 1/2$t_{CKcyc}$ + 8 | ns | Figure 2.15 |
| Multiplex address delay time | | $t_{MAD}$ | — | 8 | ns | Figure 2.15 |
| Multiplex address hold time | | $t_{MAH}$ | 1 | — | ns | Figure 2.15 |
| Address setup time to AH# | | $t_{AVVH}$ | 1/2$t_{CKcyc}$ − 2 | — | ns | Figure 2.15 |
| DACK/TEND delay time | | $t_{DACD}$ | See section 2.5.4. DMAC Timing | | ns | Figure 2.11 to Figure 2.32 |

Note: Notation of 1/2$t_{CKcyc}$ in the delay time, setup time, and hold time shows 1/2 cycles from the clock rising edge, that is, the reference of clock falling.

Note 1. Take the number of cycles of waiting that suits the system configuration into consideration with regard to the fmax value for CKIO (the external bus clock). When CKIO is running at 50 MHz or a higher frequency, select high drive output.

Note 2. These are values when SDRAM (CSnBCR.TYPE[2:0] = 100b) is selected in the CSn space bus control register (CSnBCR) and high-drive output is selected for CKIO.

Note 3. These are values when high-drive output and normal output are respectively selected for CKIO.



Downloaded from Arrow.com.

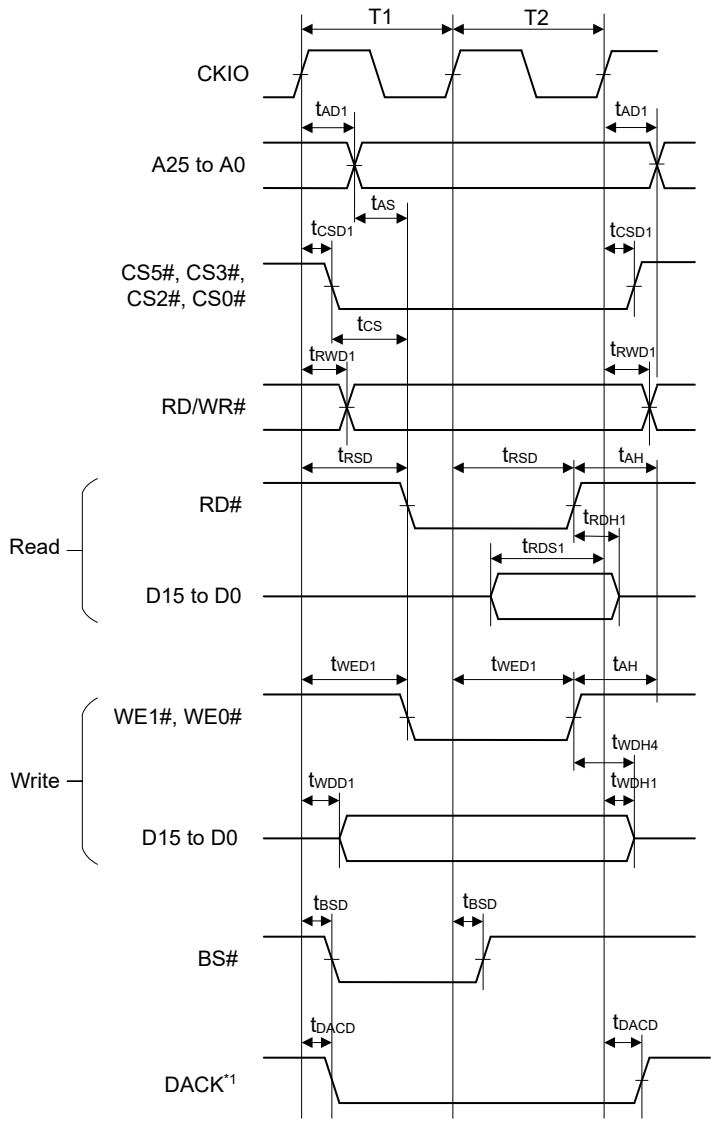


Note 1. DACK is waveform when active-low is specified.

**Figure 2.11 SRAM interface basic bus cycle (no wait)**



Downloaded from Arrow.com.

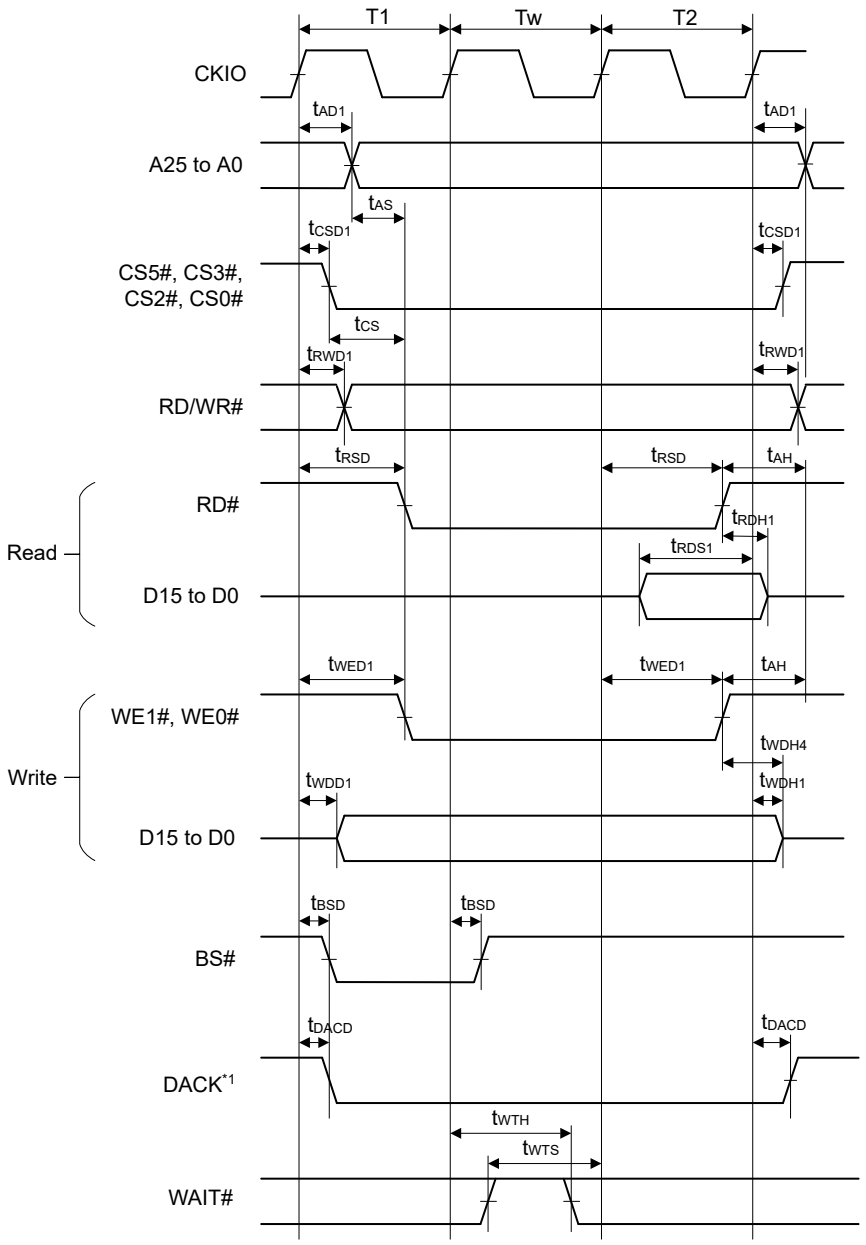


Note 1. DACK is waveform when active-low is specified.

**Figure 2.12 SRAM interface basic bus cycle (software wait 1)**



Downloaded from Arrow.com.

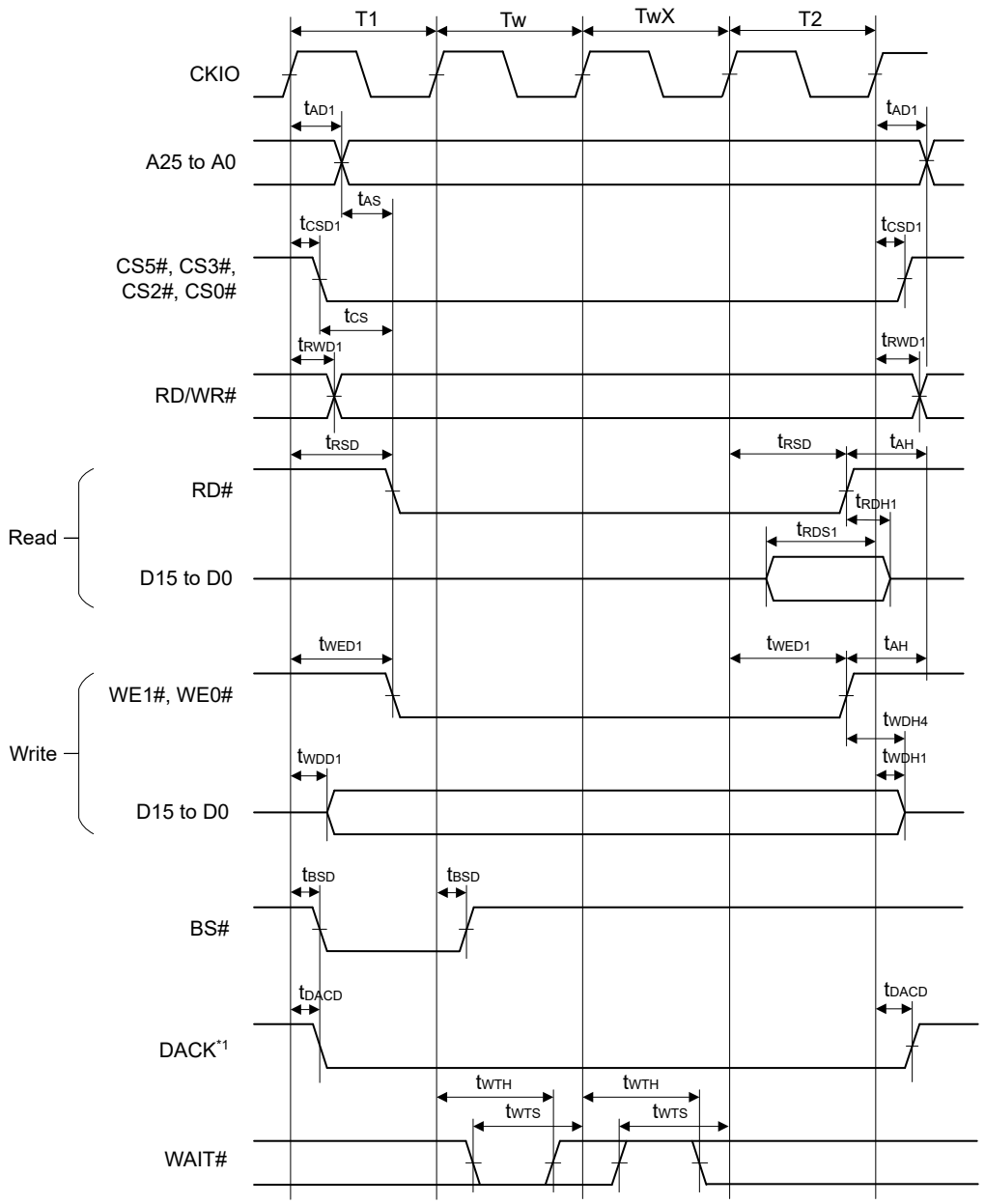


Note 1. DACK is waveform when active-low is specified.

**Figure 2.13 SRAM interface basic bus cycle (software wait 1, external wait 1 inserted)**



Downloaded from Arrow.com.

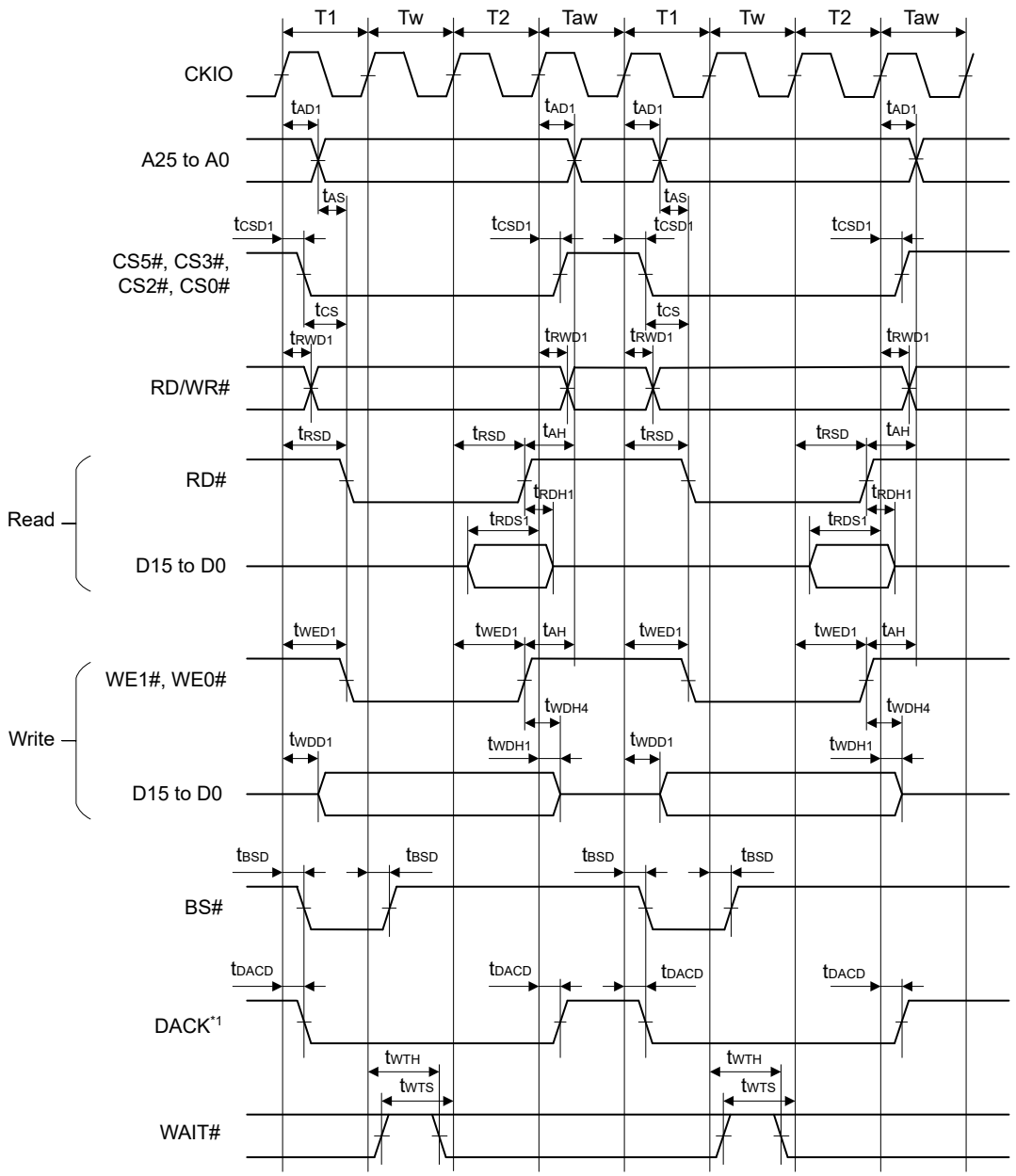


Note 1. DACK is waveform when active-low is specified.

**Figure 2.14 SRAM interface basic bus cycle (software wait 1, external wait enabled (WM = 0), no idle cycle)**



Downloaded from Arrow.com.

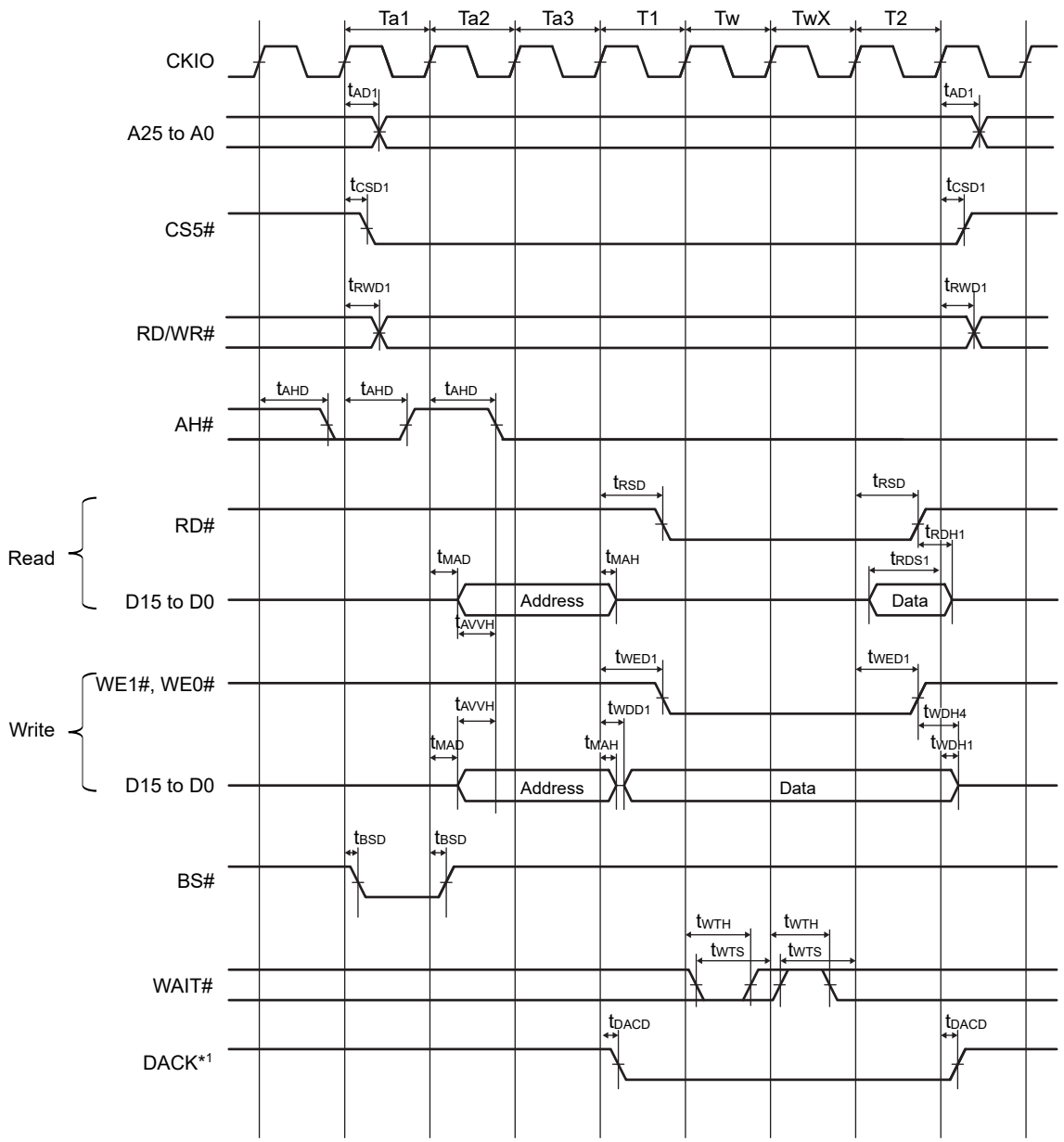


Note 1. DACK is waveform when active-low is specified.

**Figure 2.15 MPX-I/O interface bus cycle (address cycle 3, software wait 1, external wait 1 inserted)**



Downloaded from Arrow.com.

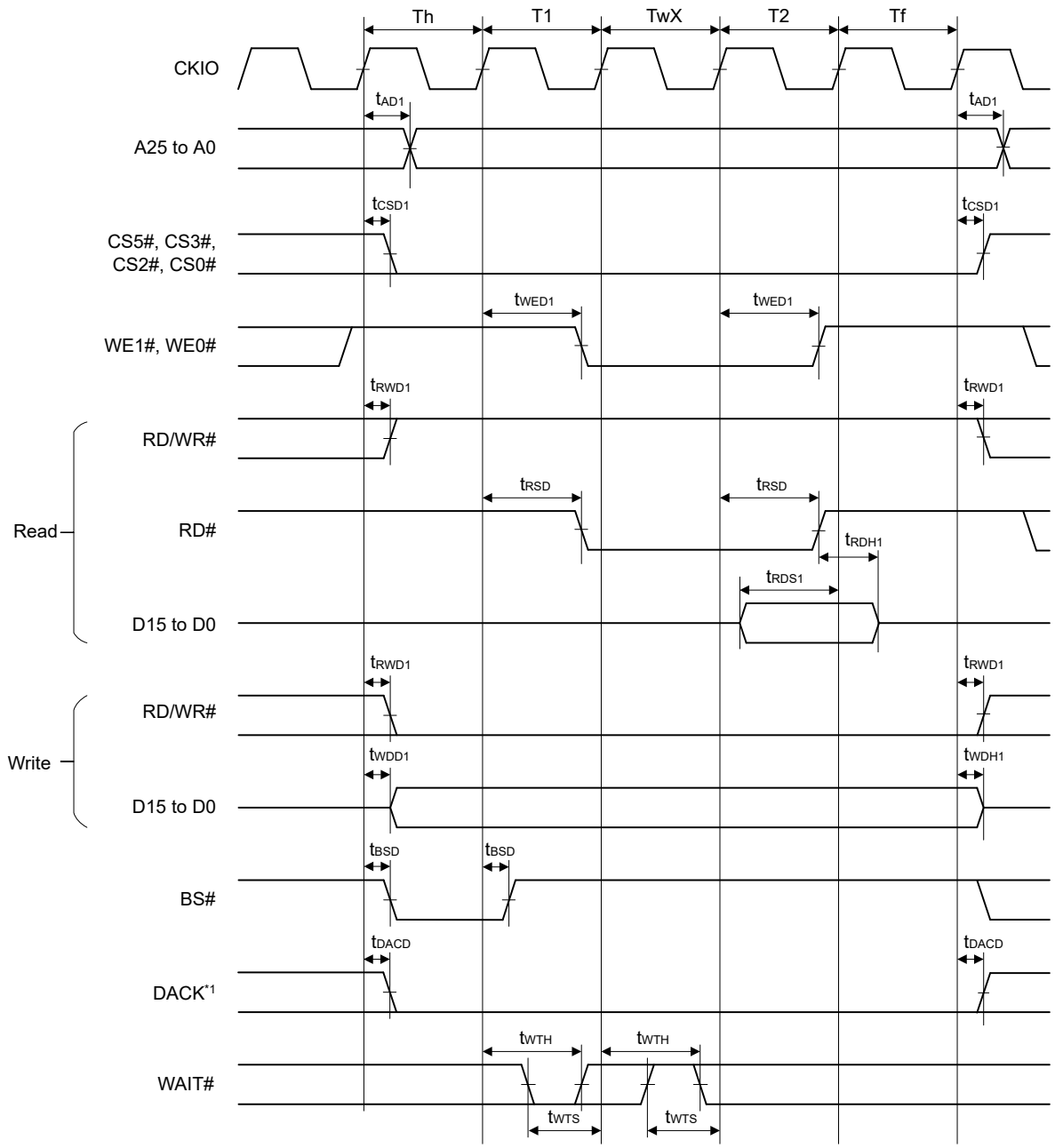


Note 1. DACK is waveform when active-low is specified.

**Figure 2.16 SRAM bus cycle with byte selection (SW = 1 cycle, HW = 1 cycle, asynchronous external wait 1 inserted, BAS = 0 (write cycle UB/LB control))**



Downloaded from Arrow.com.

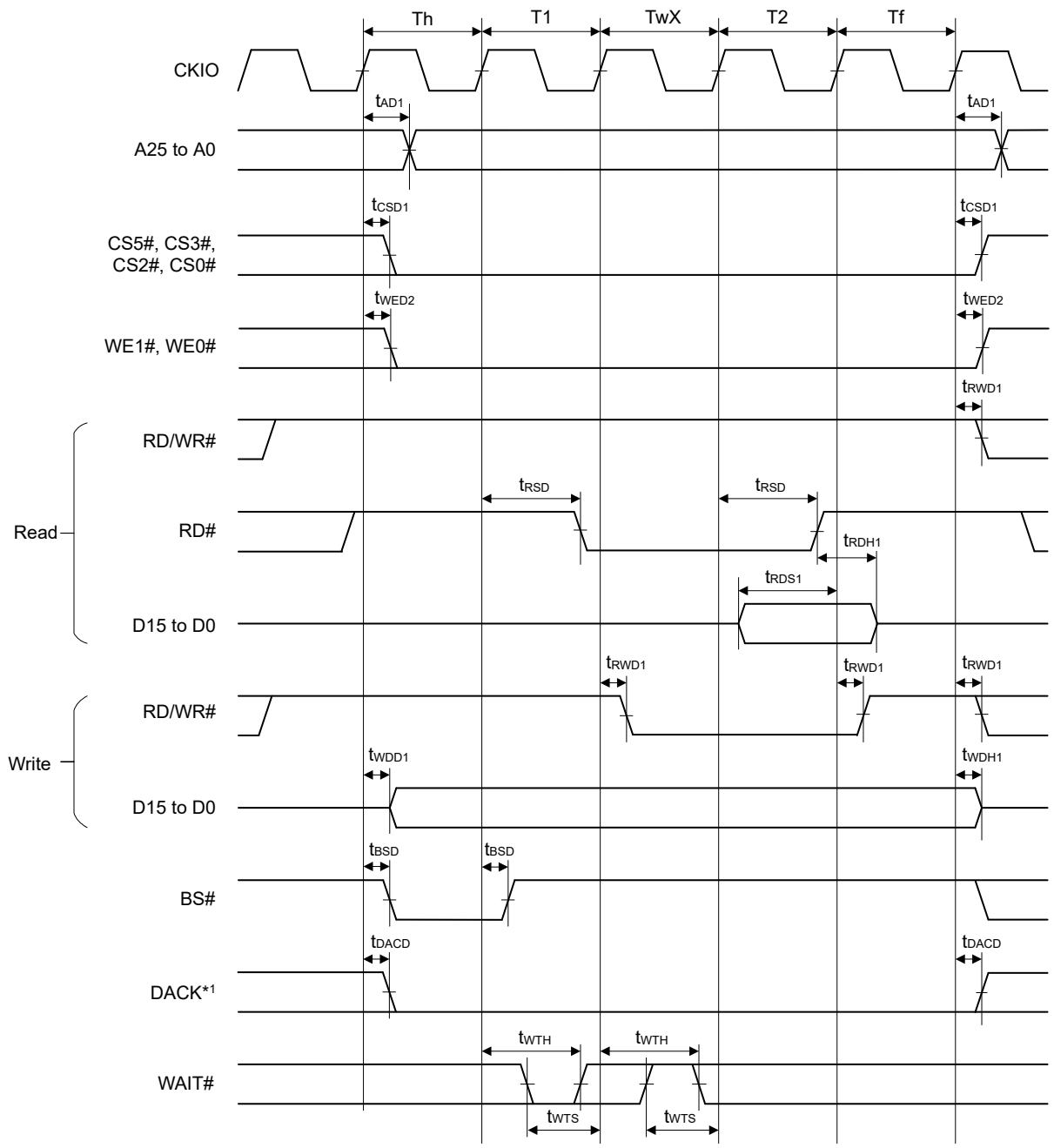


Note 1. DACK is waveform when active-low is specified.

**Figure 2.17 SRAM bus cycle with byte selection (SW = 1 cycle, HW = 1 cycle, asynchronous external wait 1 inserted, BAS = 1 (write cycle WE control))**



Downloaded from Arrow.com.

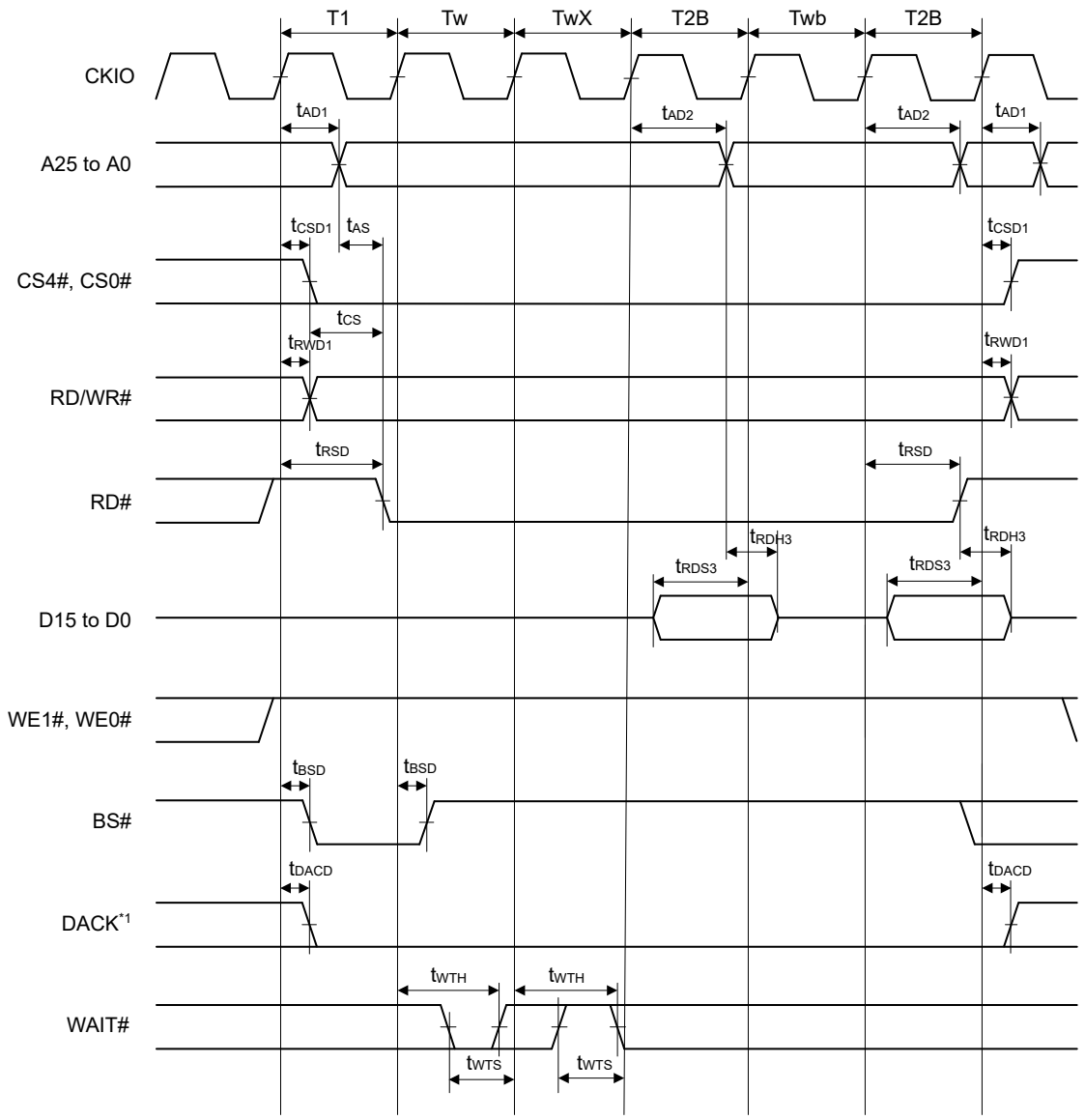


Note 1. DACK is waveform when active-low is specified.

**Figure 2.18 Burst ROM read cycle (software wait 1, asynchronous external wait 1 inserted, burst wait 1, 2)**



Downloaded from Arrow.com.

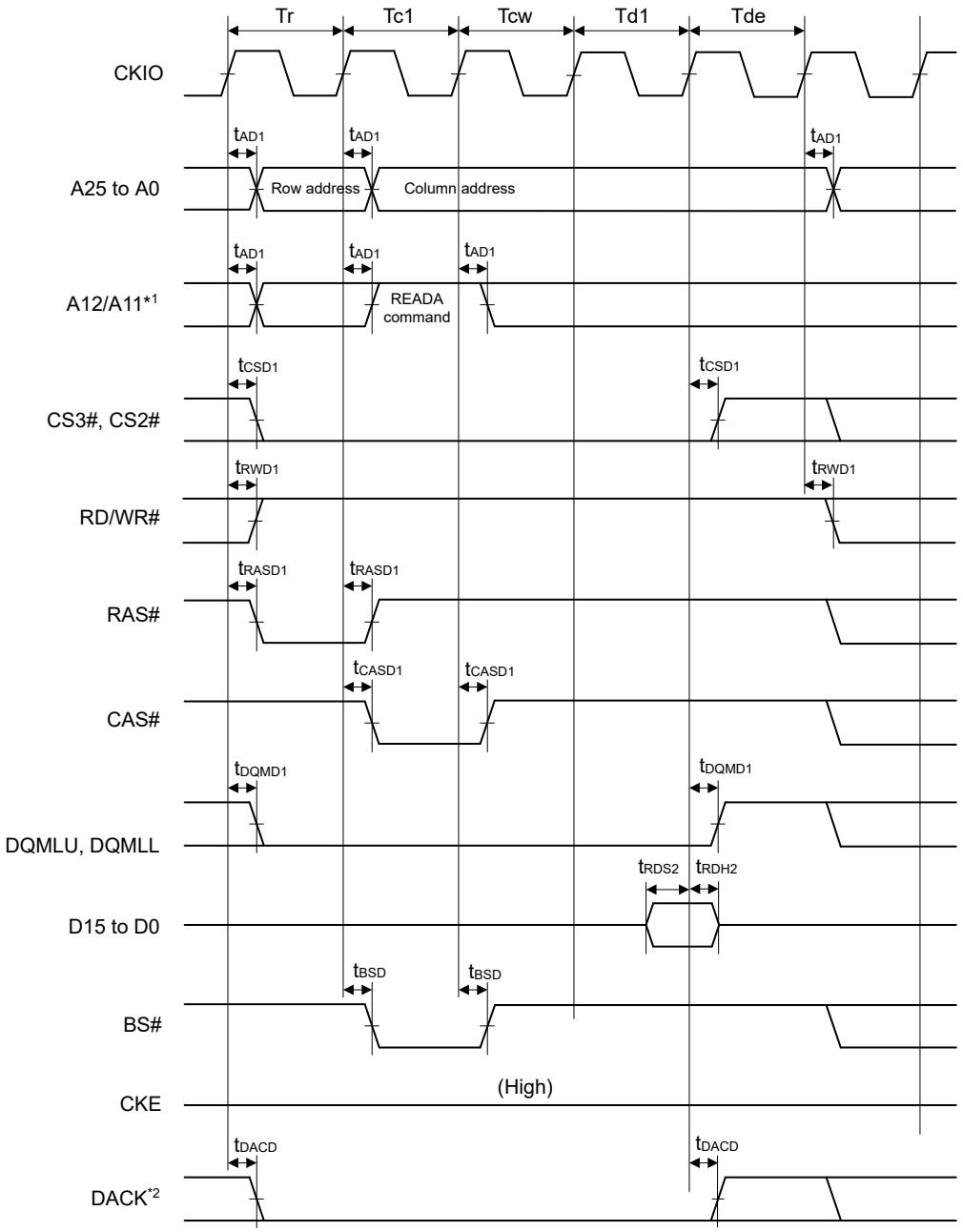


Note 1. Address pin to be connected to A10 of SDRAM.
Note 2. DACK is waveform when active-low is specified.

**Figure 2.19 Synchronous DRAM single-read bus cycle (with auto precharge, CAS latency 2, WTRCD = 0 cycles, WTRP = 0 cycles)**



Downloaded from Arrow.com.

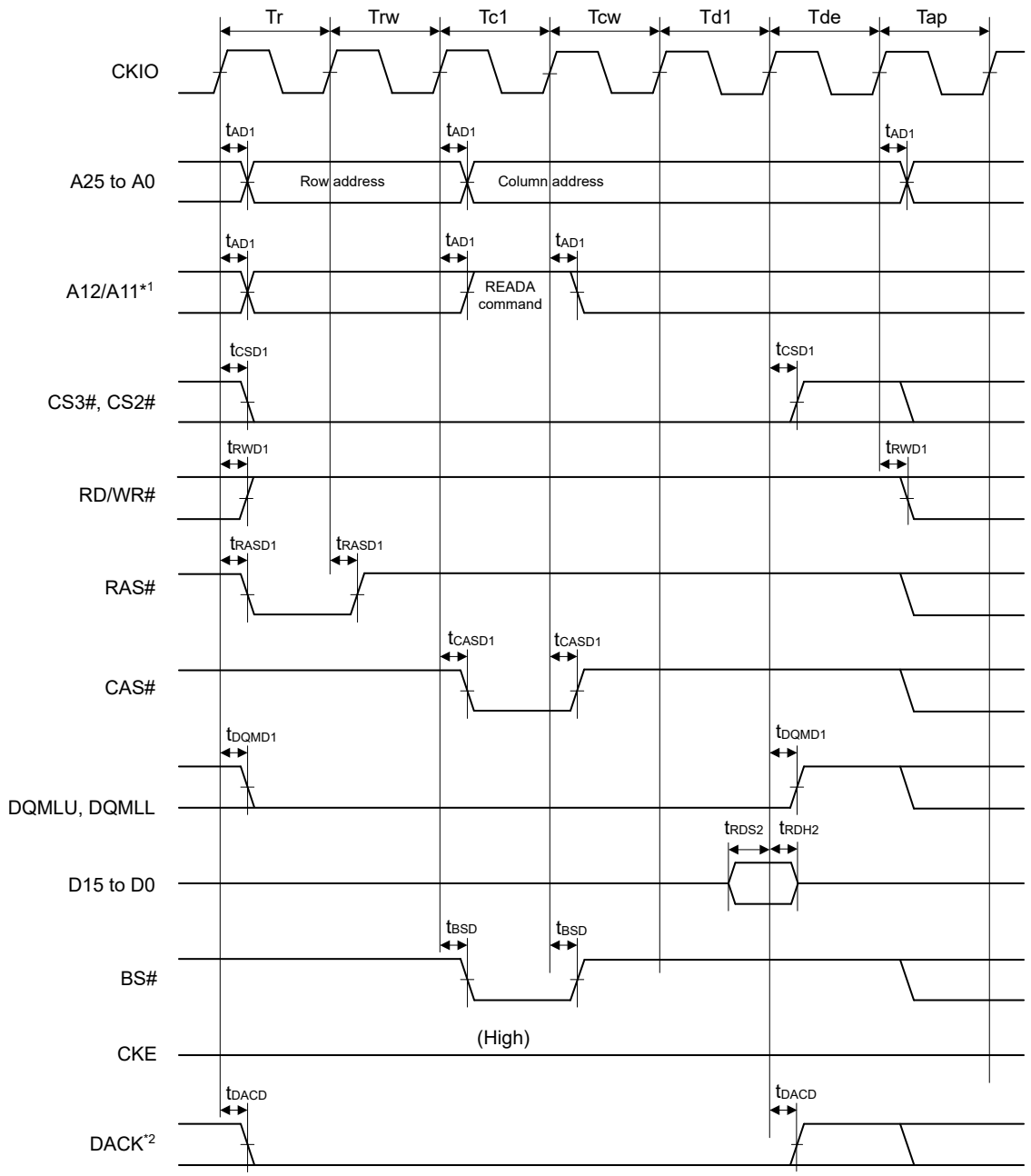


Note 1. Address pin to be connected to A10 of SDRAM.
Note 2. DACK is waveform when active-low is specified.

**Figure 2.20 Synchronous DRAM single-read bus cycle (with auto precharge, CAS latency 2, WTRCD = 1 cycle, WTRP = 1 cycle)**



Downloaded from Arrow.com.

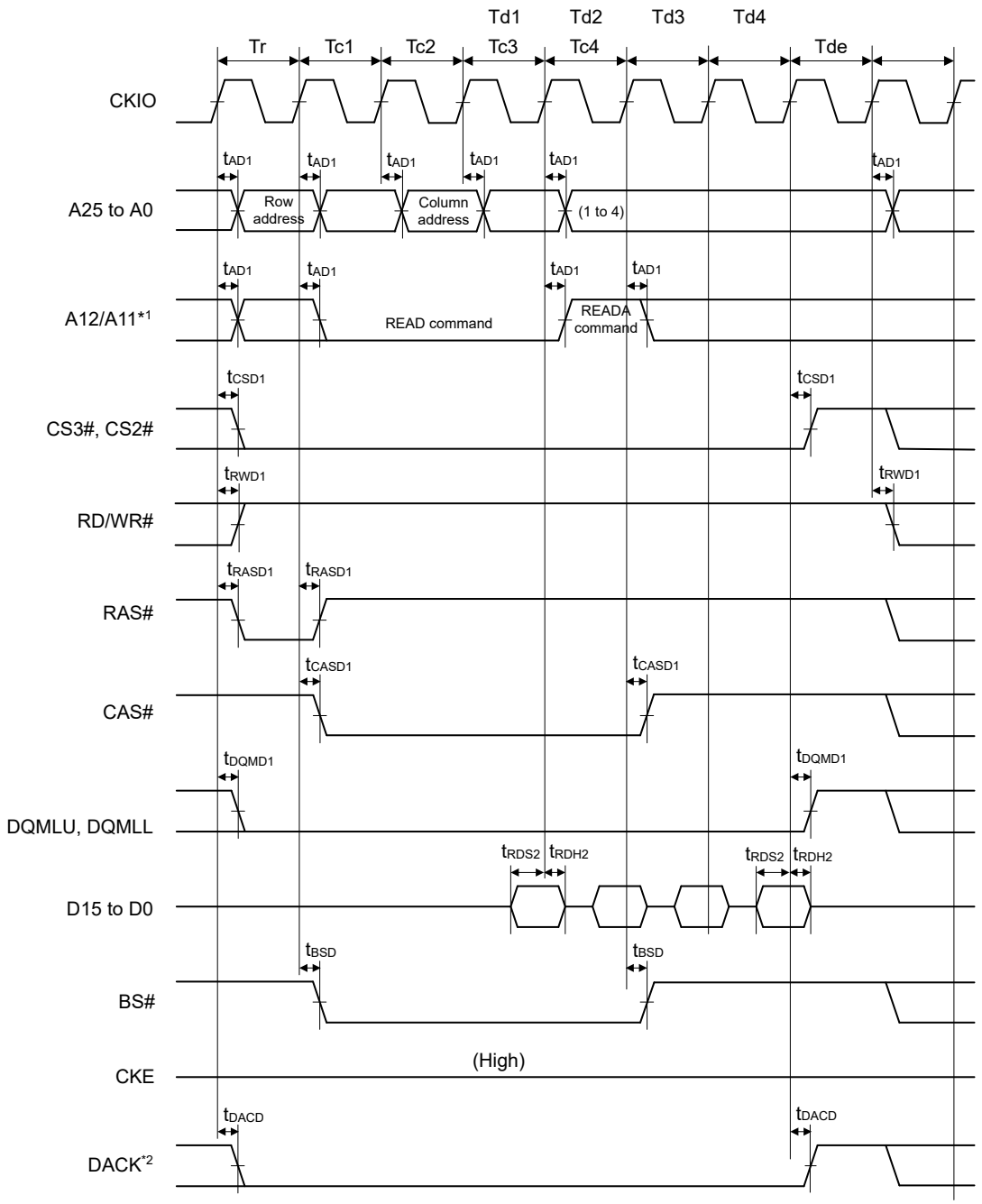


Note 1. Address pin to be connected to A10 of SDRAM.
Note 2. DACK is waveform when active-low is specified.

**Figure 2.21 Synchronous DRAM burst-read bus cycle (read for 4 cycles) (with auto precharge, CAS latency 2, WTRCD = 0 cycles, WTRP = 1 cycle)**



Downloaded from Arrow.com.

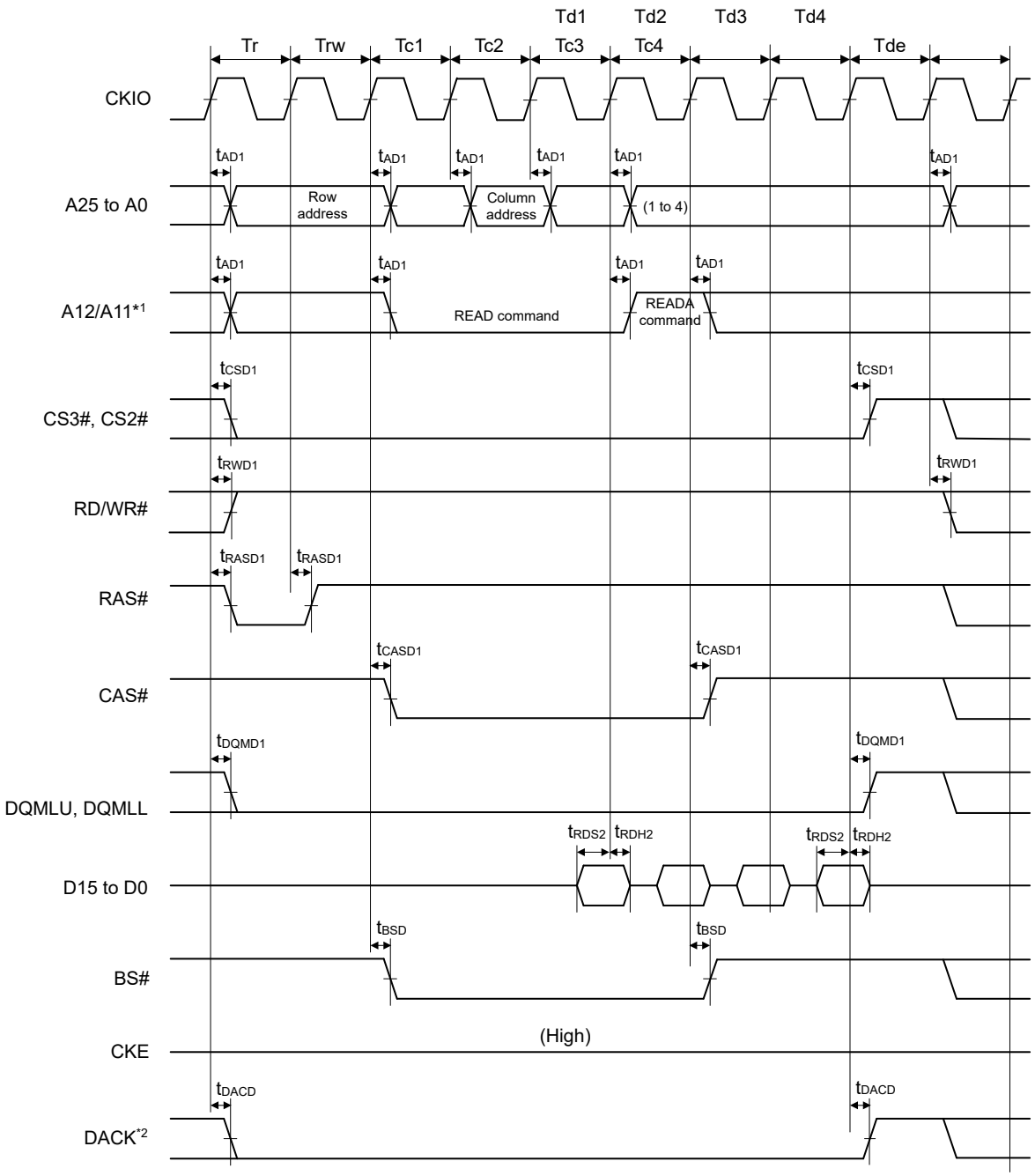


Note 1. Address pin to be connected to A10 of SDRAM.
Note 2. DACK is waveform when active-low is specified.

**Figure 2.22 Synchronous DRAM burst-read bus cycle (read for 4 cycles) (with auto precharge, CAS latency 2, WTRCD = 1 cycle, WTRP = 0 cycles)**



Downloaded from Arrow.com.

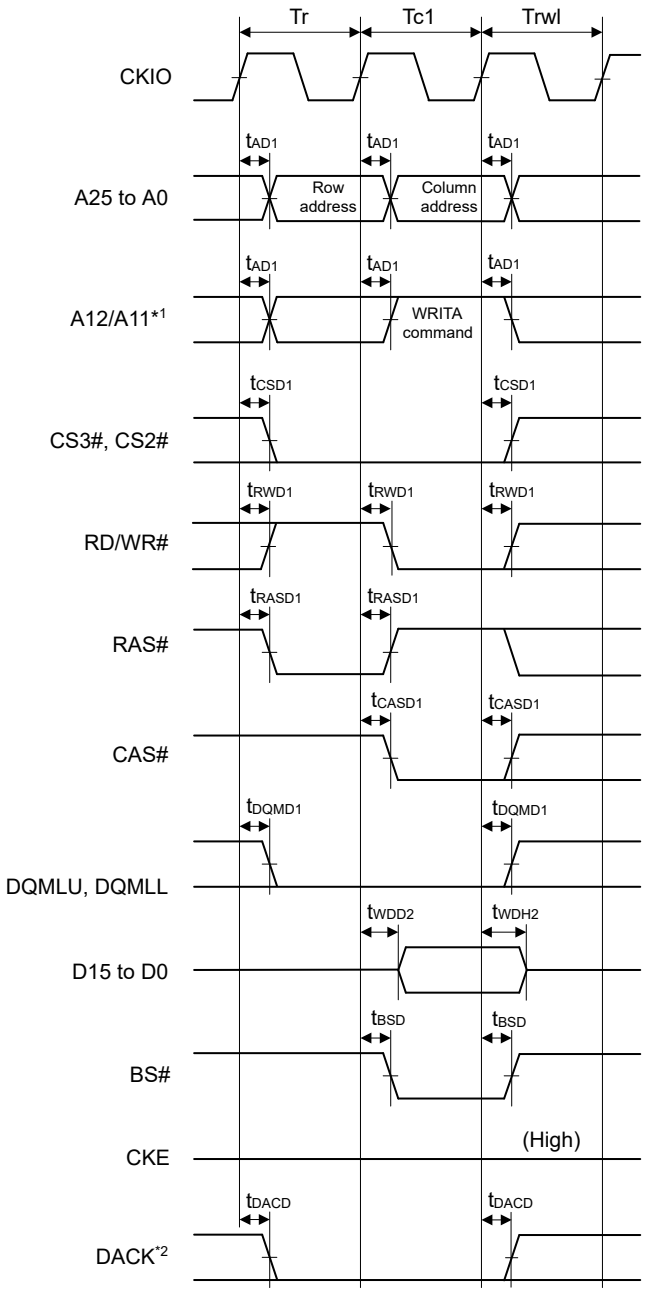


Note 1. Address pin to be connected to A10 of SDRAM.
Note 2. DACK is waveform when active-low is specified.

**Figure 2.23 Synchronous DRAM single-write bus cycle (with auto precharge, TRWL = 1 cycle)**



Downloaded from Arrow.com.

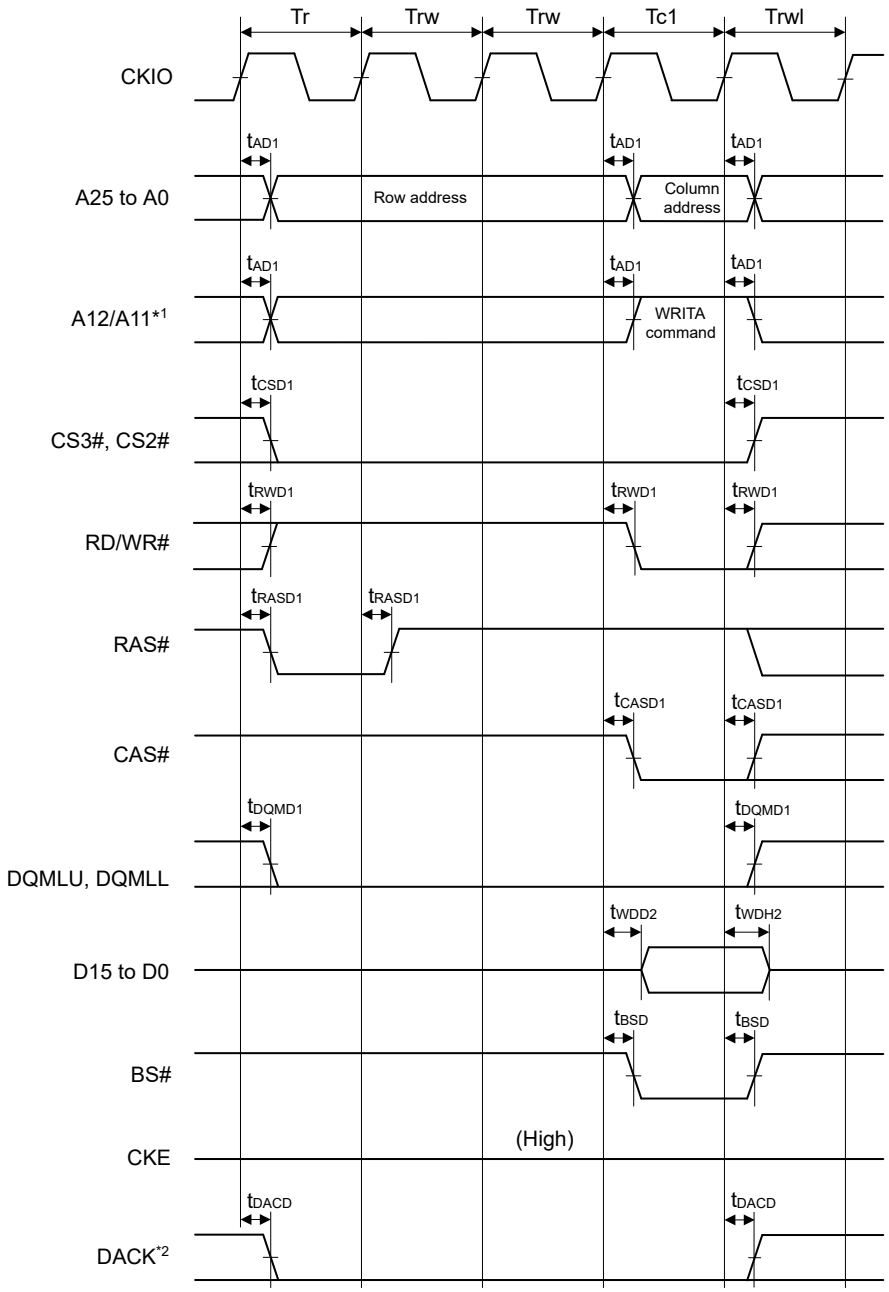


Note 1. Address pin to be connected to A10 of SDRAM.
Note 2. DACK is waveform when active-low is specified.

**Figure 2.24 Synchronous DRAM single-write bus cycle (with auto precharge, WTRCD = 2 cycles, TRWL = 1 cycle)**



Downloaded from Arrow.com.

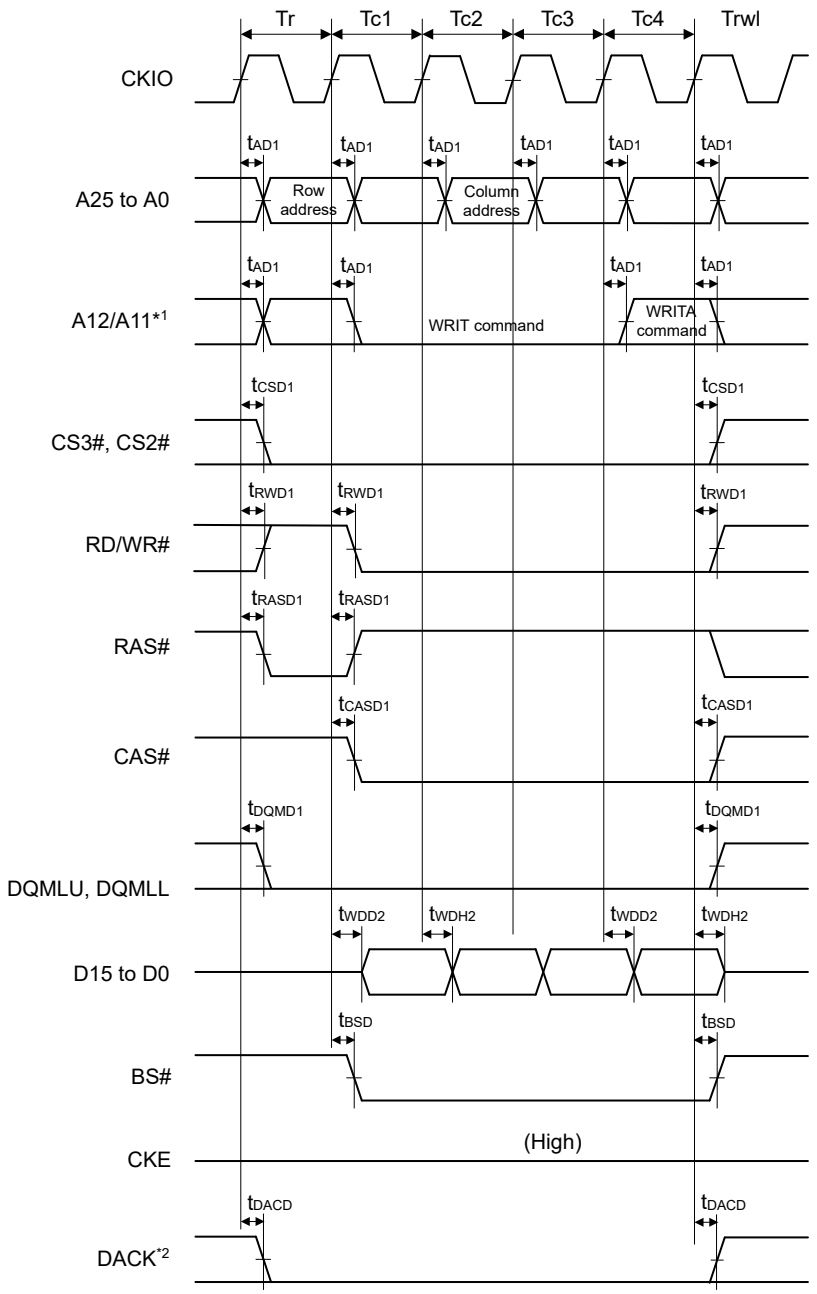


Note 1. Address pin to be connected to A10 of SDRAM.
Note 2. DACK is waveform when active-low is specified.

**Figure 2.25 Synchronous DRAM burst-write bus cycle (write for 4 cycles) (with auto precharge, WTRCD = 0 cycles, TRWL = 1 cycle)**



Downloaded from Arrow.com.

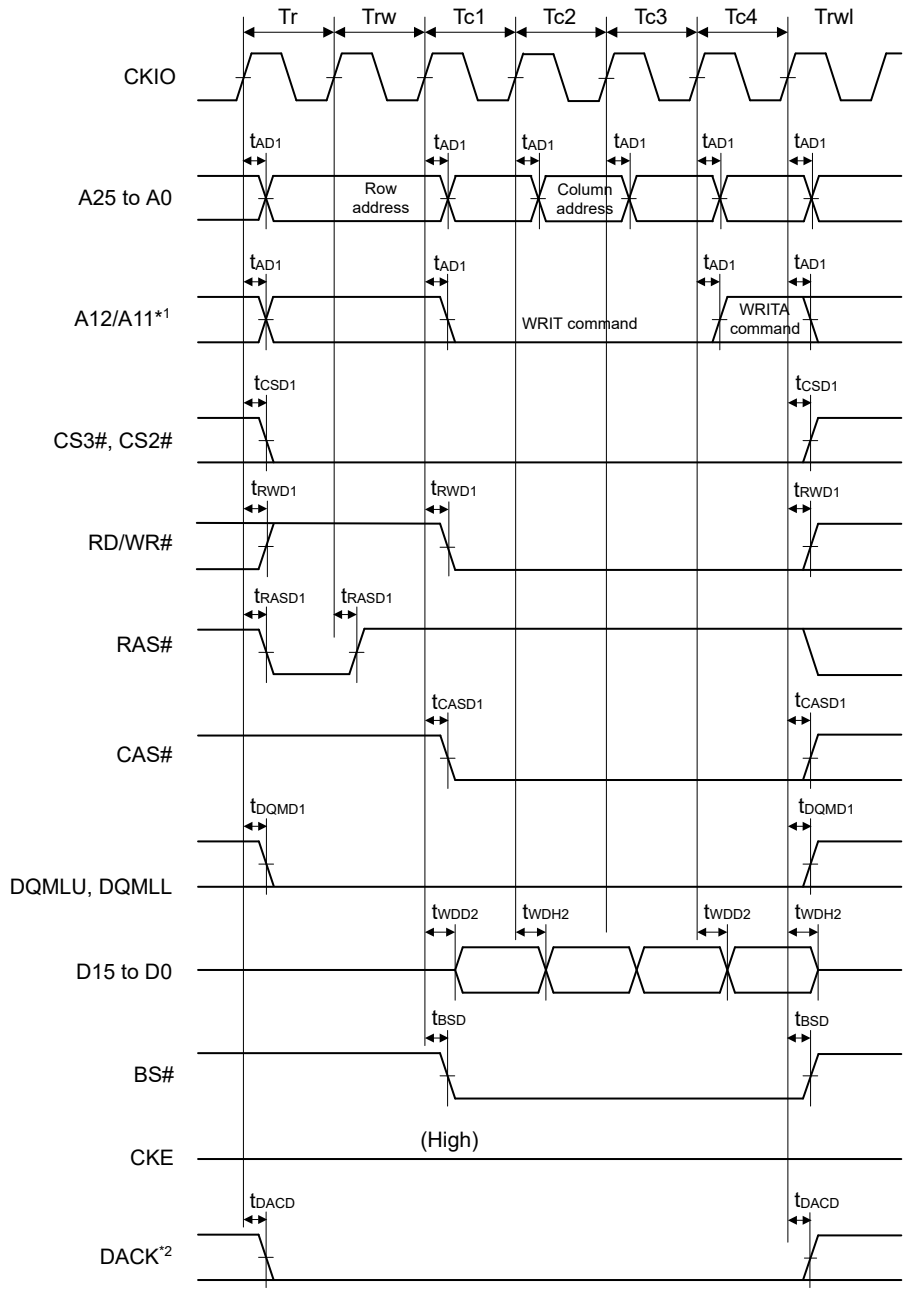


Note 1. Address pin to be connected to A10 of SDRAM.
Note 2. DACK is waveform when active-low is specified.

**Figure 2.26 Synchronous DRAM burst-write bus cycle (write for 4 cycles) (with auto precharge, WTRCD = 1 cycle, TRWL = 1 cycle)**



Downloaded from Arrow.com.

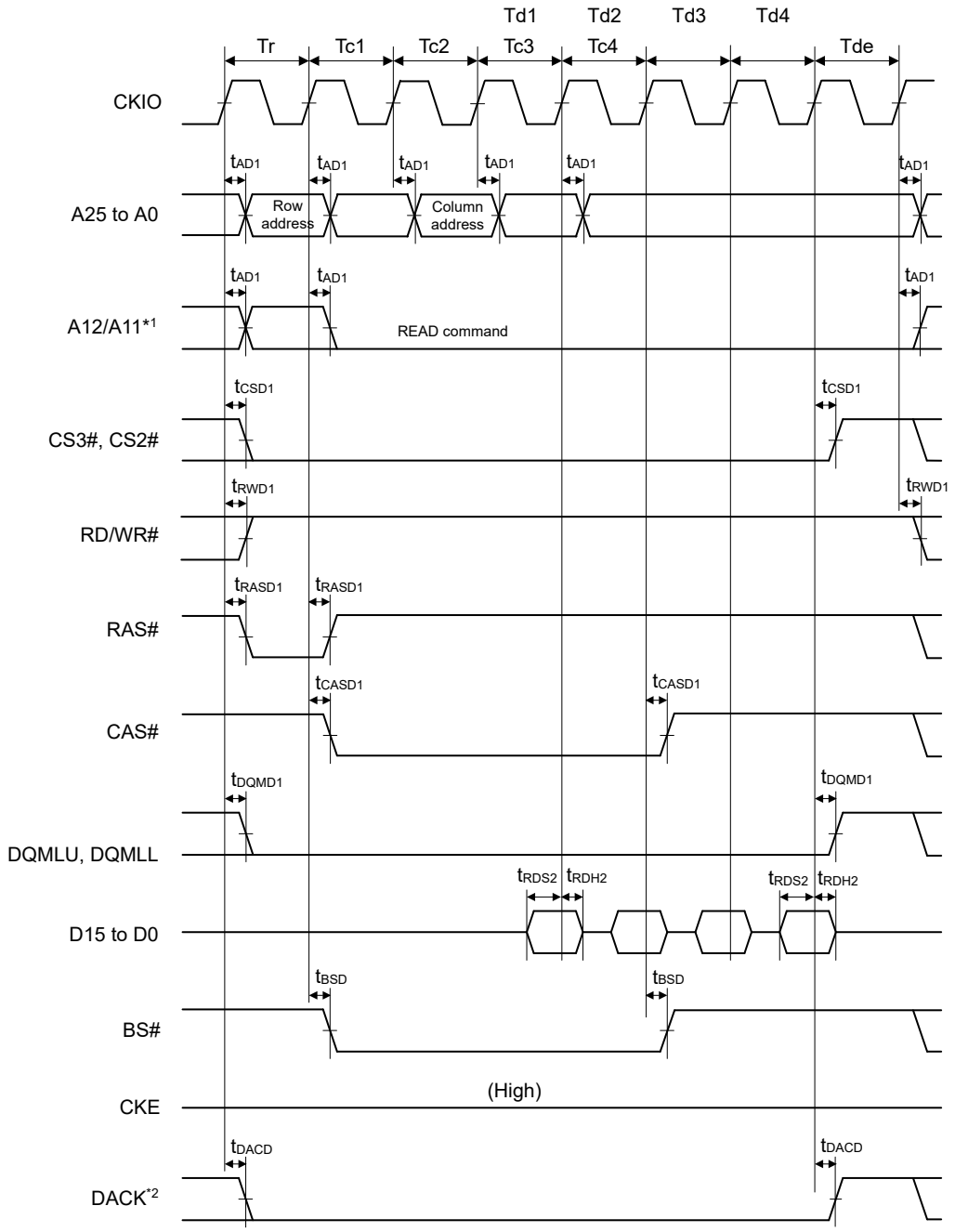


Note 1. Address pin to be connected to A10 of SDRAM.
Note 2. DACK is waveform when active-low is specified.

**Figure 2.27 Synchronous DRAM burst-read bus cycle (read for 4 cycles) (bank active mode: ACT + READ command, CAS latency 2, WTRCD = 0 cycles)**



Downloaded from Arrow.com.

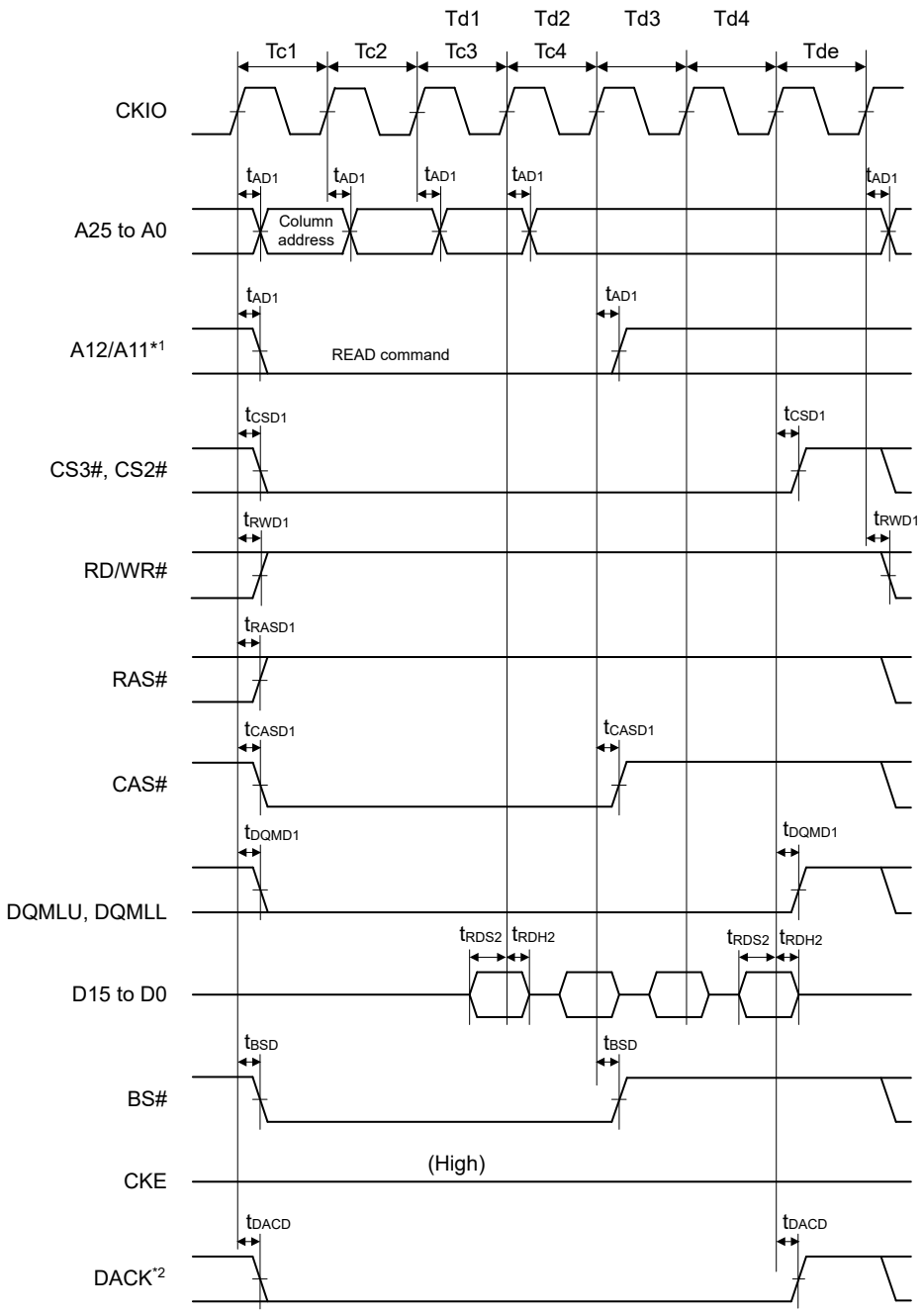


Note 1. Address pin to be connected to A10 of SDRAM.
Note 2. DACK is waveform when active-low is specified.

**Figure 2.28 Synchronous DRAM burst-read bus cycle (read for 4 cycles) (bank active mode: READ command, same row address, CAS latency 2, WTRCD = 0 cycles)**



Downloaded from Arrow.com.

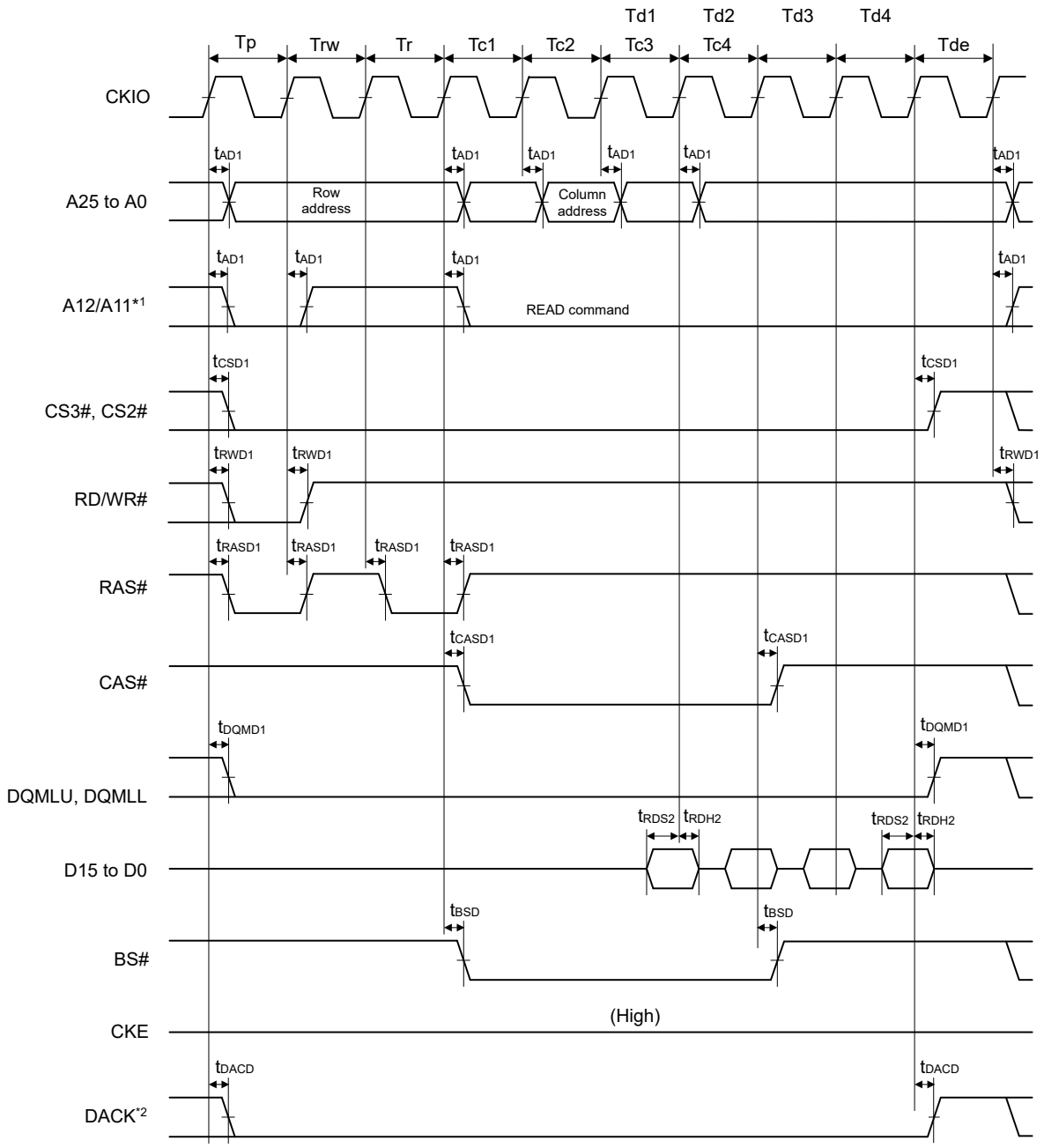


Note 1. Address pin to be connected to A10 of SDRAM.
Note 2. DACK is waveform when active-low is specified.

**Figure 2.29 Synchronous DRAM burst-read bus Cycle (read for 4 cycles) (bank active mode: PRE + ACT + READ command, different row address, CAS latency 2, WTRCD = 0 cycles)**



Downloaded from Arrow.com.

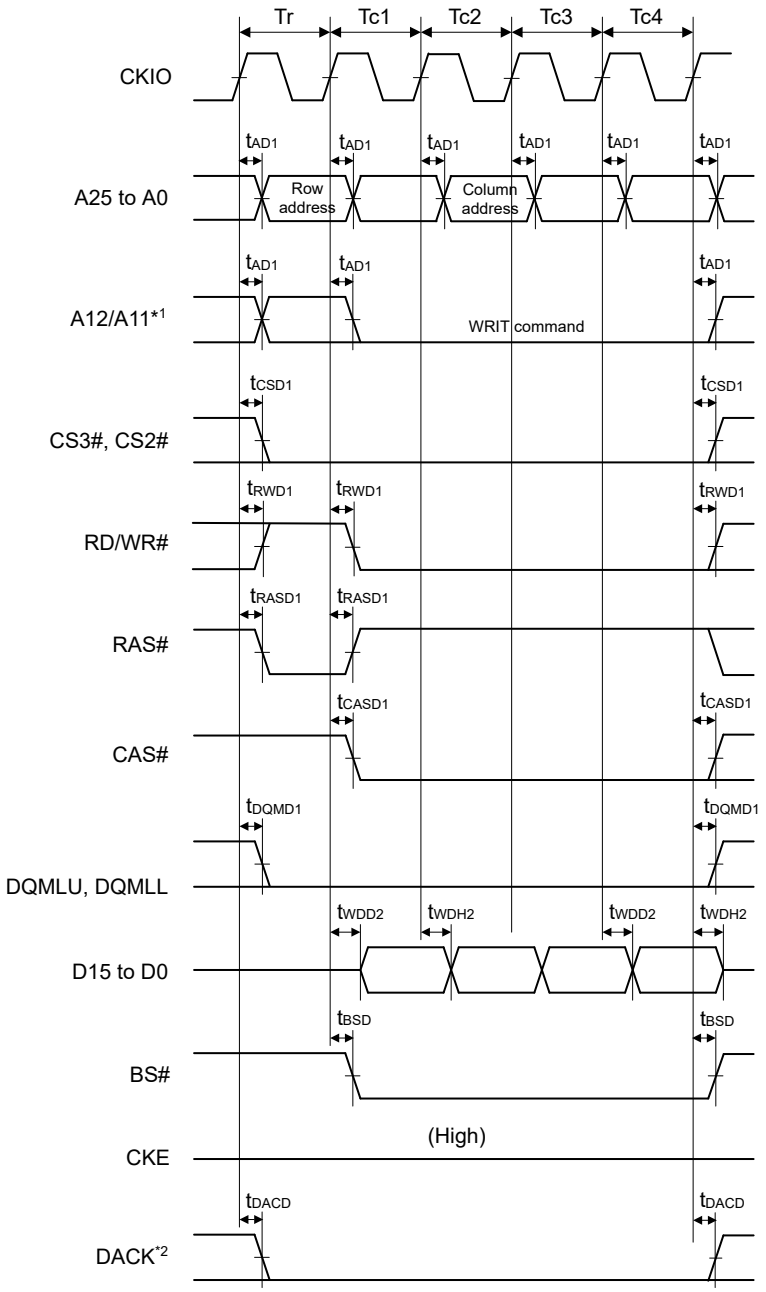


Note 1. Address pin to be connected to A10 of SDRAM.
Note 2. DACK is waveform when active-low is specified.

**Figure 2.30 Synchronous DRAM burst-write bus cycle (write for 4 cycles) (bank active mode: ACT + WRITE command, WTRCD = 0 cycles, TRWL = 0 cycles)**



Downloaded from Arrow.com.

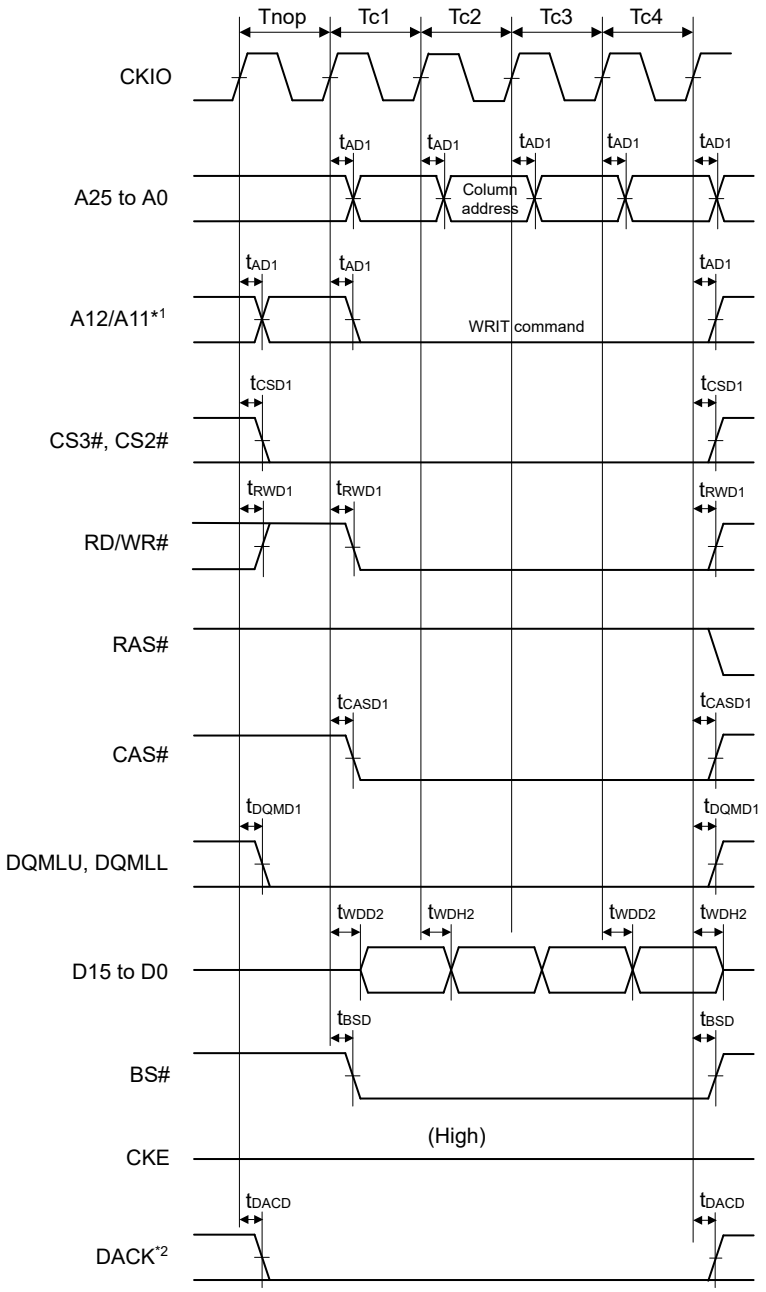


Note 1. Address pin to be connected to A10 of SDRAM.
Note 2. DACK is waveform when active-low is specified.

**Figure 2.31 Synchronous DRAM burst-write bus cycle (write for 4 cycles) (bank active mode: WRITE command, same row address, WTRCD = 0 cycles, TRWL = 0 cycles)**



Downloaded from Arrow.com.

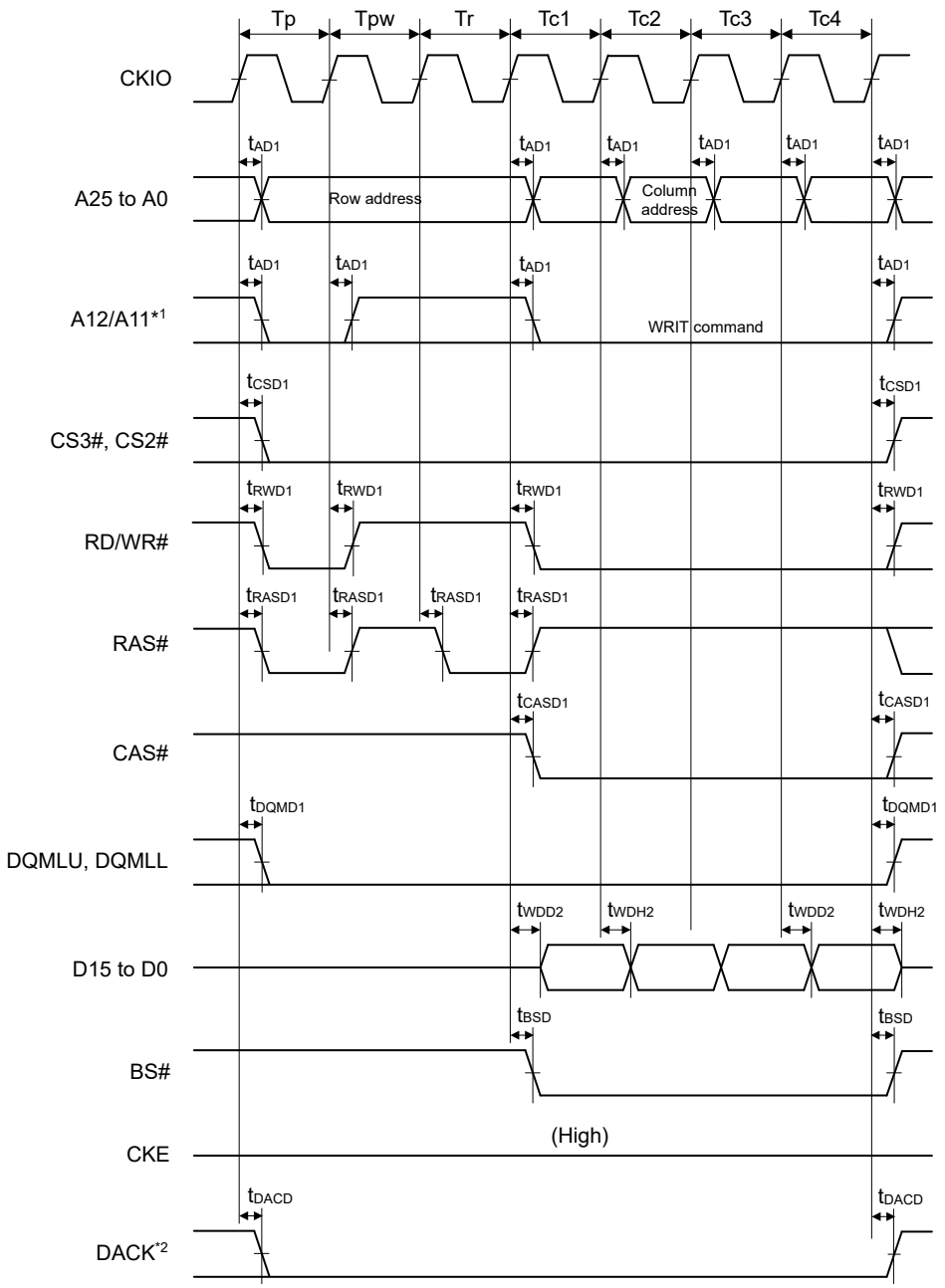


Note 1. Address pin to be connected to A10 of SDRAM.
Note 2. DACK is waveform when active-low is specified.

**Figure 2.32 Synchronous DRAM burst-write bus cycle (write for 4 cycles) (bank active mode: PRE + ACT + WRITE command, different row address, WTRCD = 0 cycles, TRWL = 0 cycles)**



Downloaded from Arrow.com.

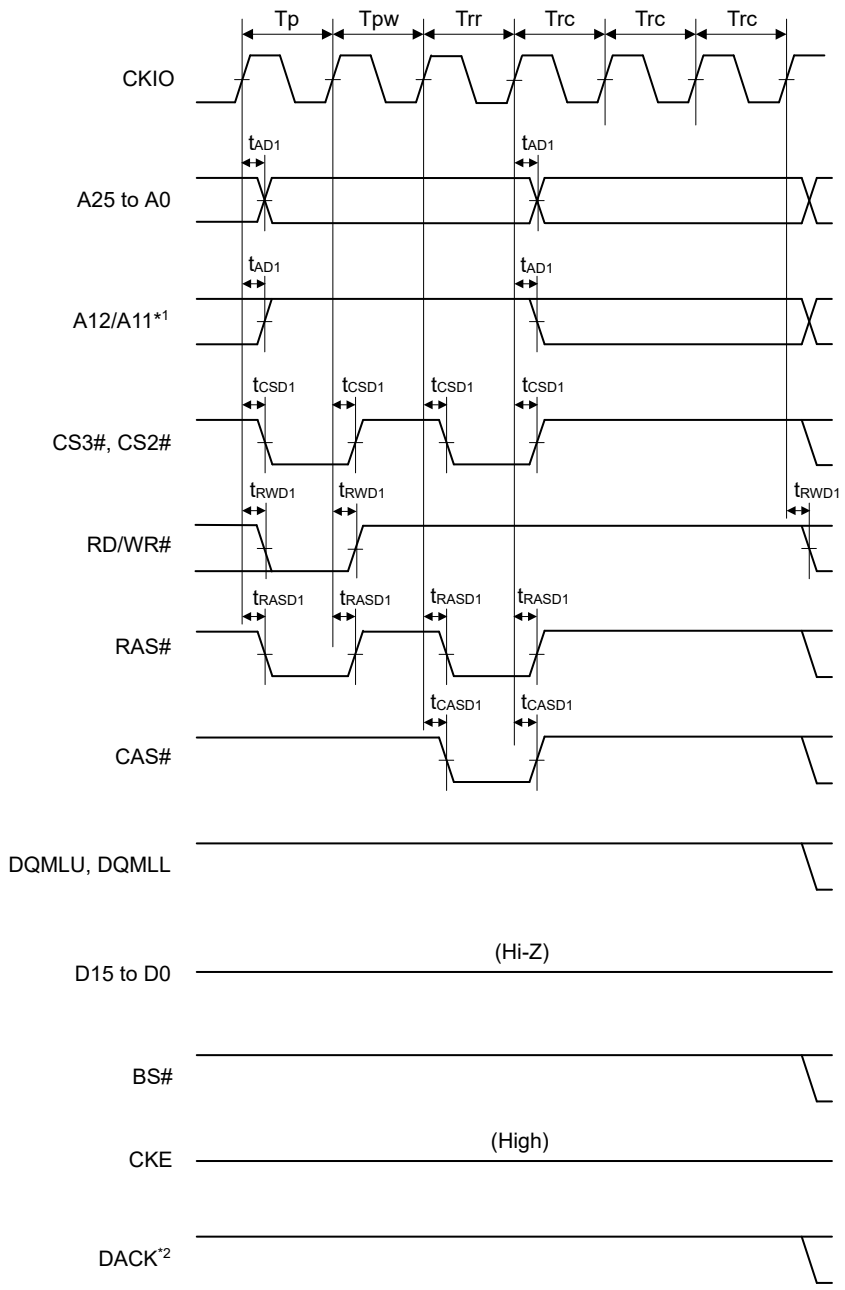


Note 1. Address pin to be connected to A10 of SDRAM.
Note 2. DACK is waveform when active-low is specified.

**Figure 2.33 Synchronous DRAM auto-refresh timing (WTRP = 1 cycle, WTRC = 3 cycles)**



Downloaded from Arrow.com.

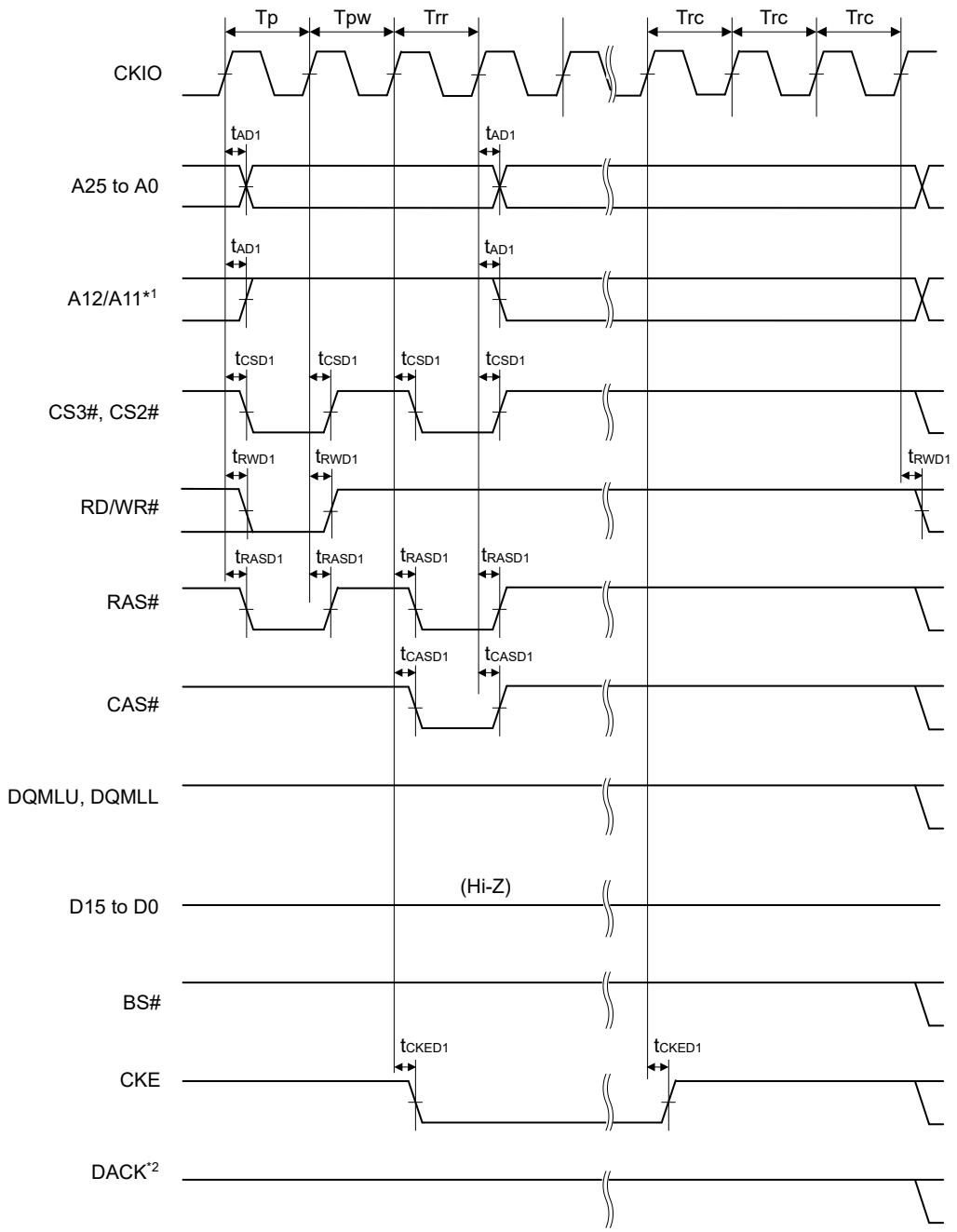


Note 1. Address pin to be connected to A10 of SDRAM.
Note 2. DACK is waveform when active-low is specified.

**Figure 2.34 Synchronous DRAM self-refresh timing (WTRP = 1 cycle)**



Downloaded from Arrow.com.

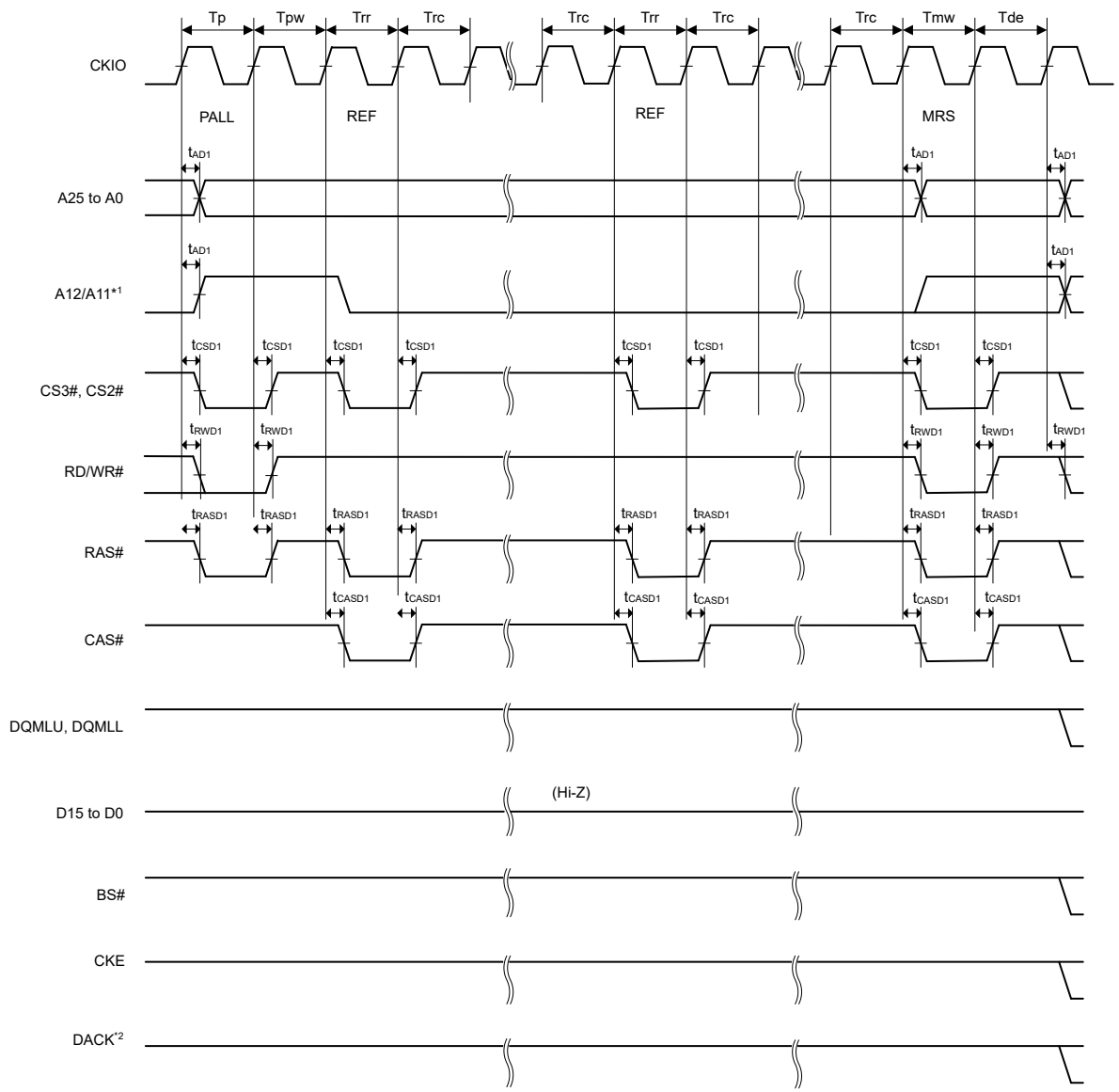


Note 1. Address pin to be connected to A10 of SDRAM.
Note 2. DACK is waveform when active-low is specified.

**Figure 2.35 Synchronous DRAM mode register set timing (WTRP = 1 cycle)**

## 2.5.4 DMAC Timing

**Table 2.23 DMAC timing**

Conditions: $V_{OH}$ = VCC33 × 0.5, $V_{OL}$ = VCC33 × 0.5, C = 15 pF (CKIO), 30 pF (others), $T_j$min = −40°C

| Parameter | | Symbol | Min.*1 | Max. | Unit | Reference figure |
|---|---|---|---|---|---|---|
| DMAC | DREQ pulse width | $t_{DRQW}$ | $t_{Icyc}$ × 2 | — | ns | Figure 2.36 |
| | DACK and TEND delay time | $t_{DACD}$ | 0 | 10 | ns | Figure 2.37 |

Note 1. $t_{Icyc}$: ICLK cycle



Downloaded from Arrow.com.

**Table 2.24 DMAC timing**

Conditions: $V_{OH}$ = VCC33 × 0.5, $V_{OL}$ = VCC33 × 0.5, C = 12 pF (CKIO), 12 pF (others), $T_j$min = −20°C

| Parameter | | Symbol | Min.*1 | Max. | Unit | Reference figure |
|---|---|---|---|---|---|---|
| DMAC | DREQ pulse width | $t_{DRQW}$ | $t_{Icyc}$ × 2 | — | ns | Figure 2.36 |
| | DACK and TEND delay time | $t_{DACD}$ | -0.5 | 8 | ns | Figure 2.37 |

Note 1. $t_{Icyc}$: ICLK cycle

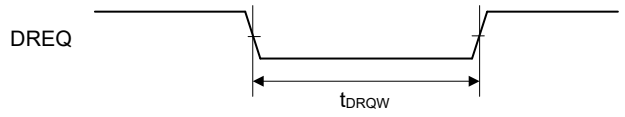


**Figure 2.36 DREQ input timing**

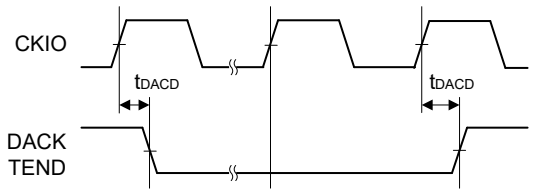


**Figure 2.37 DACK and TEND output timing**

## 2.5.5 On-Chip Peripheral Module Timing

### 2.5.5.1 I/O Port Timing

**Table 2.25 I/O port timing**

| Parameter | | Symbol | Min. | Max. | Unit*1 | Reference figure |
|---|---|---|---|---|---|---|
| I/O port | Input data pulse width | $t_{PRW}$ | 1.5 | — | $t_{PLcyc}$ | Figure 2.38 |

Note 1. $t_{PLcyc}$: PCLKL cycle

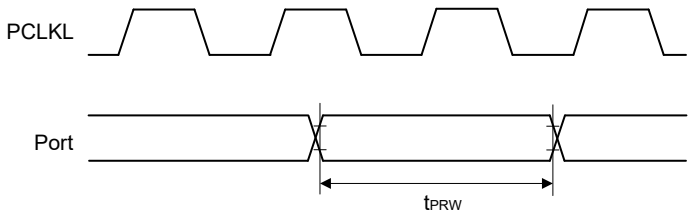


**Figure 2.38 I/O port input timing**

### 2.5.5.2 CMTW Timing

**Table 2.26 CMTW timing**

| Parameter | | | Symbol | Min. | Max. | Unit*1 | Reference figure |
|---|---|---|---|---|---|---|---|
| CMTW | Input capture input pulse width | Single-edge setting | $t_{CMTWICW}$ | 1.5 | — | $t_{PLcyc}$ | Figure 2.39 |
| | | Both-edge setting | | 2.5 | — | | |



Downloaded from Arrow.com.

Note 1. $t_{PLcyc}$: PCLKL cycle

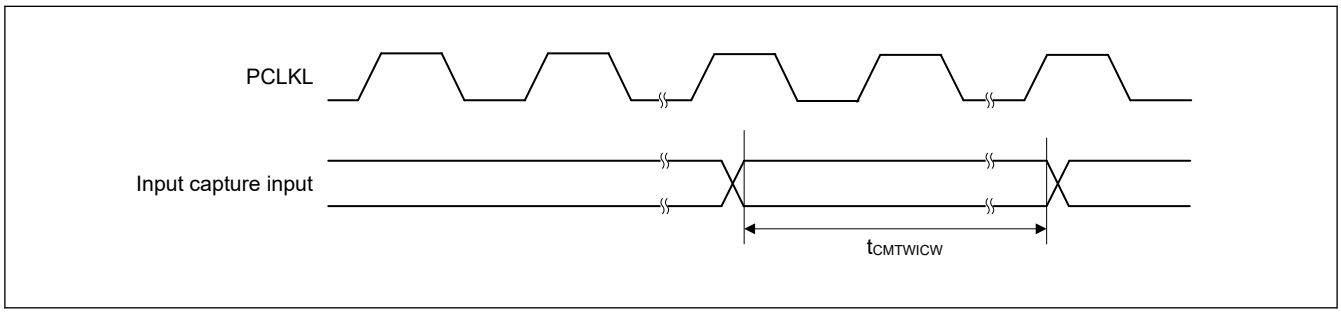


**Figure 2.39 CMTW input capture input timing**

### 2.5.5.3 MTU3 Timing

**Table 2.27 MTU3 timing**

| Parameter | | | Symbol | Min. | Max. | Unit*1 | Reference figure |
|---|---|---|---|---|---|---|---|
| MTU3 | Input capture input pulse width | Single-edge setting | $t_{MTICW}$ | 2.5 | — | $t_{PHcyc}$ | Figure 2.40 |
| | | Both-edge setting | | 3.5 | — | | |
| | Timer clock pulse width | Single-edge setting | $t_{MTCKWH}$, $t_{MTCKWL}$ | 2.5 | — | $t_{PHcyc}$ | Figure 2.41 |
| | | Both-edge setting | | 3.5 | — | | |
| | | Phase counting mode | | 3.5 | — | | |

Note 1. $t_{PHcyc}$: PCLKH cycle

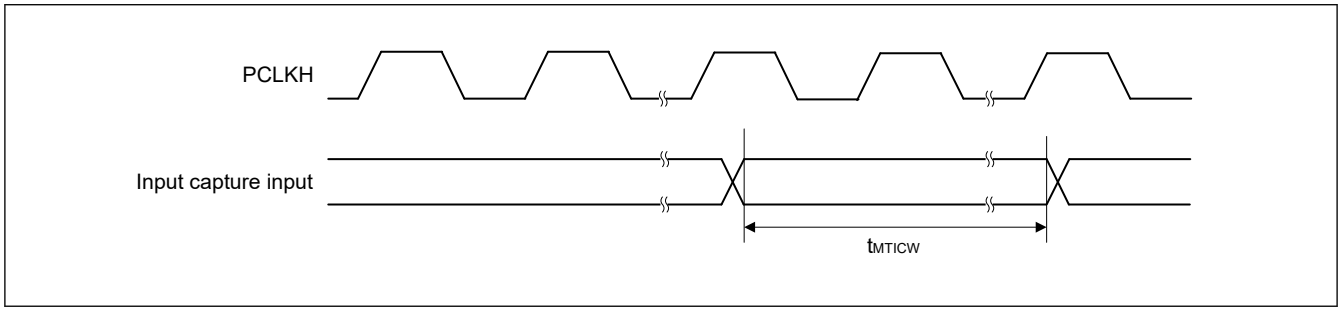


**Figure 2.40 MTU3 input capture input timing**

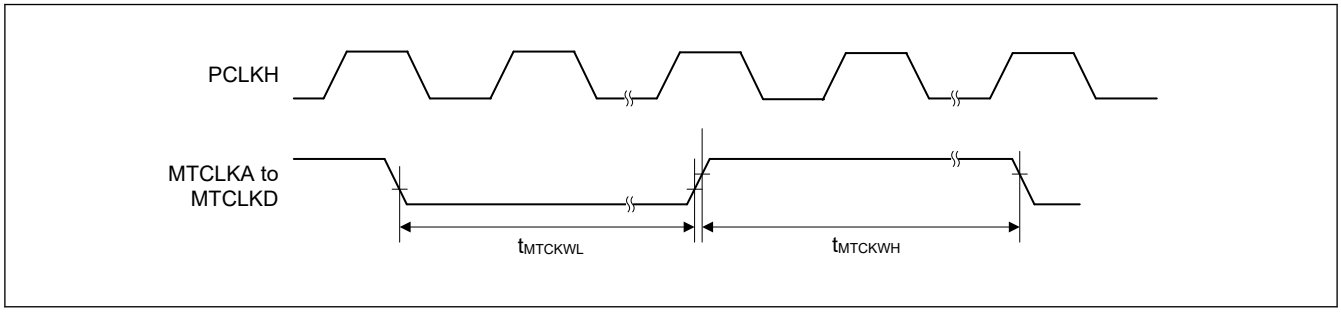


**Figure 2.41 MTU3 clock input timing**



Downloaded from Arrow.com.

### 2.5.5.4 POE3 Timing

**Table 2.28 POE3 timing**

| Parameter | | | Symbol | Min. | Max. | Unit*1 | Reference figure |
|---|---|---|---|---|---|---|---|
| POE3 | POEn# input pulse width | | $t_{POEW}$ | 2.5 | — | $t_{PHcyc}$ | Figure 2.42 |
| | Output disable time | Transition of the POEn# signal level | $t_{POEDI}$ | — | 5 × PCLKH + 0.1 | μs | Figure 2.43 |
| | | Simultaneous conduction of output pins | $t_{POEDO}$ | — | 3 × PCLKH + 0.1 | μs | Figure 2.44 |
| | | Register setting | $t_{POEDS}$ | — | PCLKH + 0.1 | μs | Figure 2.45 |
| | | Oscillation stop detection | $t_{POEDOS}$ | — | 74 | μs | Figure 2.46 |

Note 1. $t_{PHcyc}$: PCLKH cycle

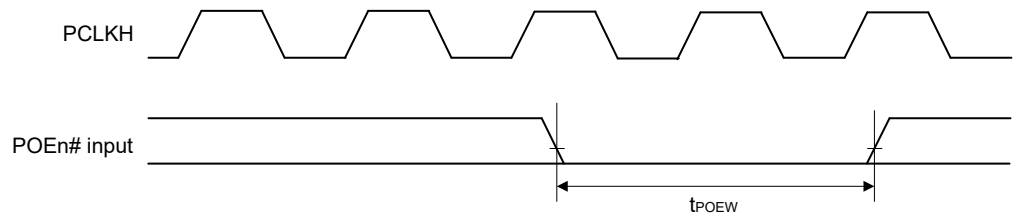


**Figure 2.42 POEn# input pulse timing**

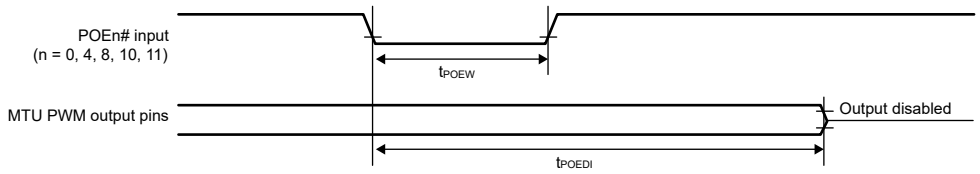


**Figure 2.43 Output disable time for POE in response to transition of the POEn# signal level**

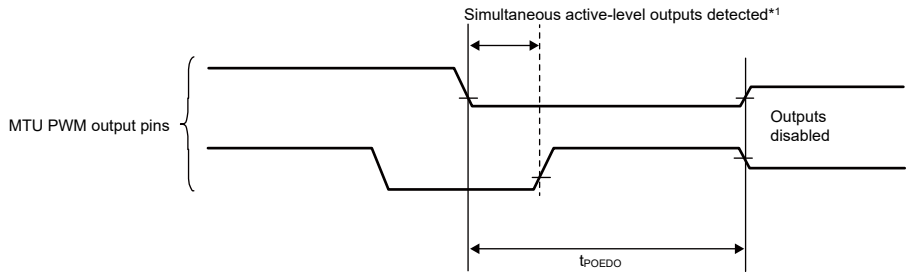


Note 1. When the active level is set to low.

**Figure 2.44 Output disable time for POE in response to the simultaneous conduction of output pins**



Downloaded from Arrow.com.

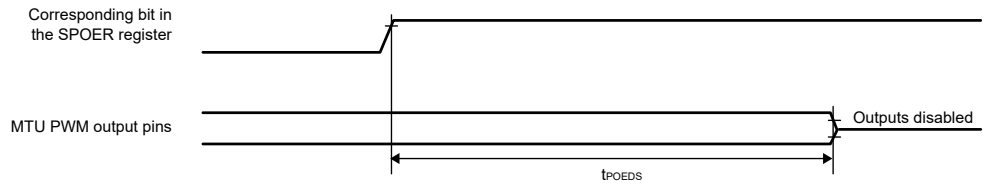


**Figure 2.45 Output disable time for POE in response to the register setting**

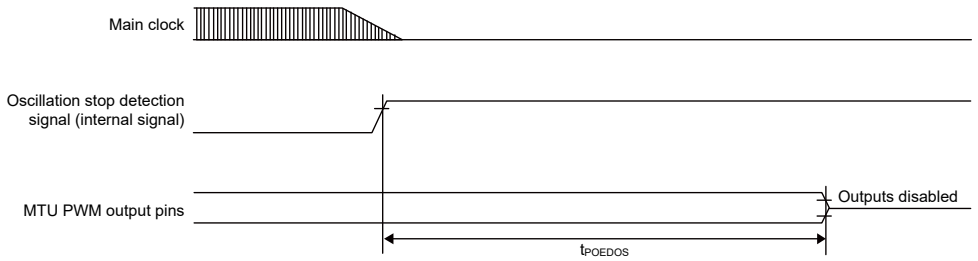


**Figure 2.46 Output disable time for POE in response to the oscillation stop detection**

### 2.5.5.5 GPT Timing

**Table 2.29 GPT timing**

| Parameter | | | Symbol | Min. | Max. | Unit*1 | Reference figure |
|---|---|---|---|---|---|---|---|
| GPT | Input capture input pulse width | Single-edge setting | $t_{GTICW}$ | 2.5 | — | $t_{PHcyc}$ | Figure 2.47 |
| | | Both-edge setting | | 3.5 | — | | |
| | External trigger input pulse width | Single-edge setting | $t_{GTEW}$ | 2.5 | — | $t_{PHcyc}$ | Figure 2.48 |
| | | Both-edge setting | | 3.5 | — | | |

Note 1. $t_{PHcyc}$: PCLKH cycle (LLPP channels), PCLKM cycle (Other channels)

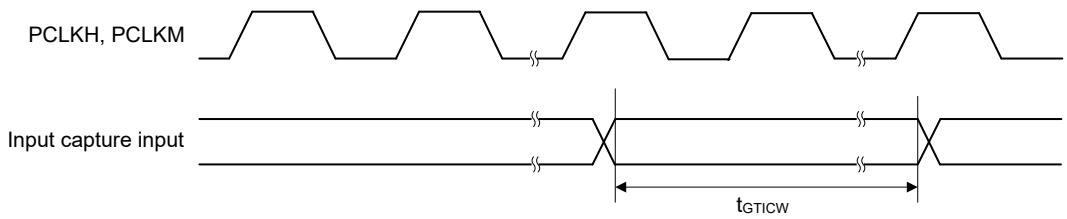


**Figure 2.47 GPT input capture input timing**



Downloaded from Arrow.com.

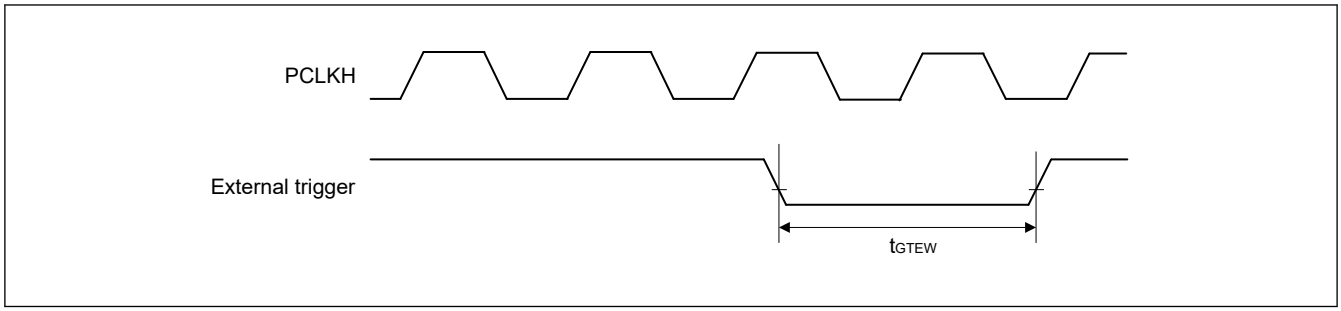


**Figure 2.48 GPT external trigger input timing**

### 2.5.5.6 POEG Timing

**Table 2.30 POEG timing**

| Parameter | | | Symbol | Min. | Max. | Unit*1 | Reference figure |
|---|---|---|---|---|---|---|---|
| POEG | GTETRGn input pulse width (n = A to D) | | $t_{POEGW}$ | 2.5 | — | $t_{PHcyc}$ | Figure 2.49 |
| | Output disable time | Input level detection of the GTETRGn pin (via flag) | $t_{POEGDI}$ | — | 3 × PCLKH + 0.1 | μs | Figure 2.50 |
| | | Detection of the output stopping signal from GPT (dead time error, simultaneous high output, or simultaneous low output) | $t_{POEGDO}$ | — | 0.1 | μs | Figure 2.51 |
| | | Register setting | $t_{POEGDS}$ | — | PCLKH + 0.1 | μs | Figure 2.52 |
| | | Oscillation stop detection | $t_{POEGDOS}$ | — | 74 | μs | Figure 2.53 |

Note 1. $t_{PHcyc}$: PCLKH cycle (LLPP channels), PCLKL cycle (Other channels)

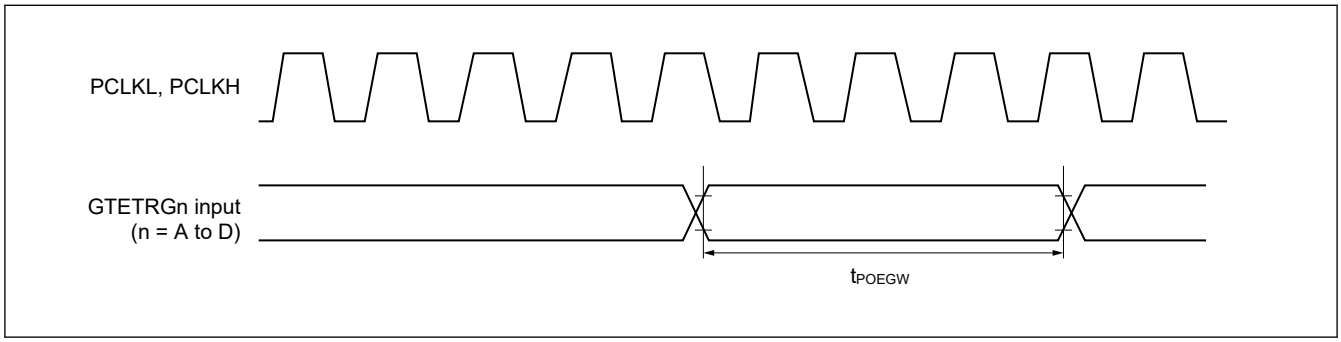


**Figure 2.49 POEG input timing**

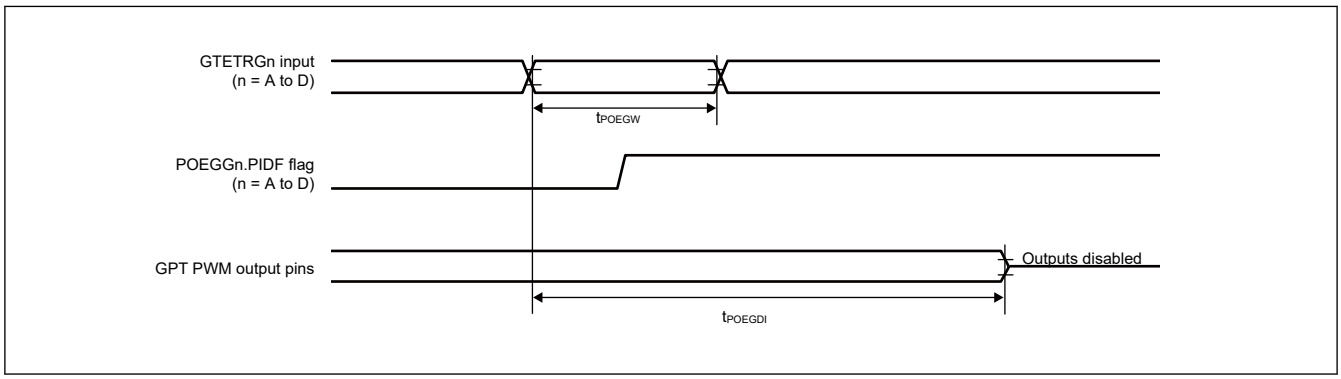


**Figure 2.50 Output disable time for POEG via detection flag in response to the input level detection of the GTETRGn pin**



Downloaded from Arrow.com.

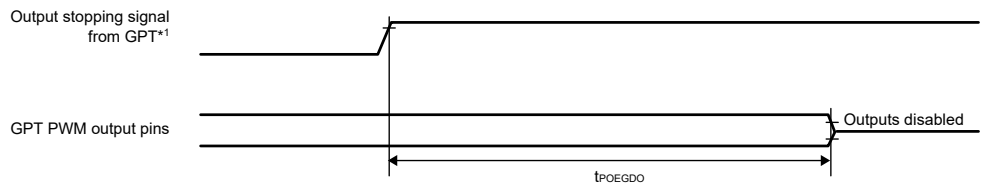


Note 1. GPTn.GTST.DTEF (dead time error flag), GPTn.GTST.OABLF (simultaneous low out flag), or GPTn.GTST.OABHF (simultaneous high output flag)

**Figure 2.51 Output disable time for POEG in response to detection of the output stopping signal from GPT**

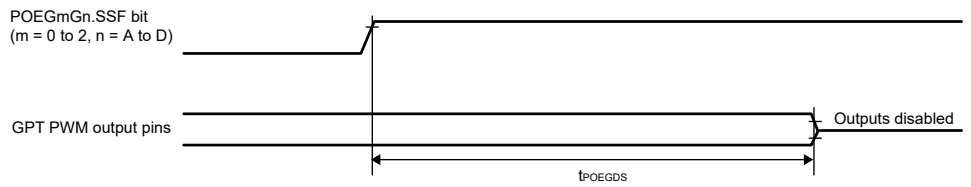


**Figure 2.52 Output disable time for POEG in response to the register setting**

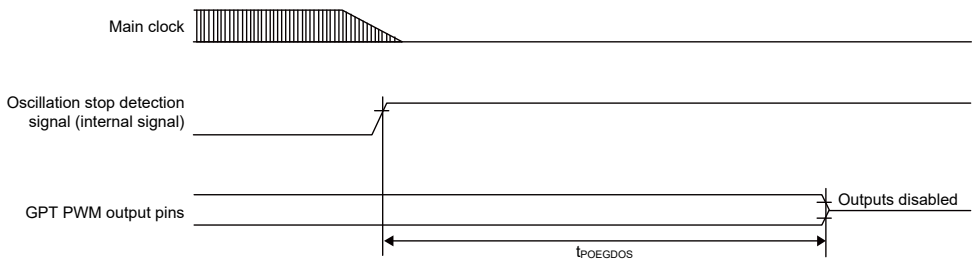


**Figure 2.53 Output disable time for POEG in response to the oscillation stop detection**

## 2.5.5.7 A/D Converter Trigger Timing

**Table 2.31 A/D converter trigger timing**

| Parameter | | | Symbol | Min. | Max. | Unit*1 | Reference figure |
|---|---|---|---|---|---|---|---|
| A/D converter | A/D converter trigger input pulse width | ADTRG0#, ADTRG1# | $t_{TRGW}$ | 1.5 | — | $t_{PADCcyc}$ | Figure 2.54 |

Note 1. $t_{PADCcyc}$: PCLKADC cycle

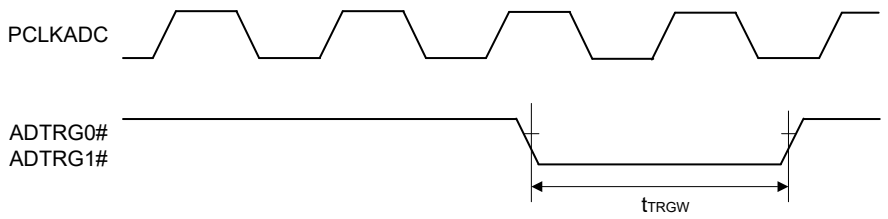


**Figure 2.54 A/D converter trigger input timing (ADTRG0#, ADTRG1#)**



Downloaded from Arrow.com.

### 2.5.5.8 SCI Timing

Conditions: $V_{OH}$ = VCC33 × 0.5, $V_{OL}$ = VCC33 × 0.5, C = 30 pF (except Simple I2C)

**Table 2.32 SCI timing (1 of 2)**

| Parameter | | Symbol | Min. | Max. | Unit | Reference figure |
|---|---|---|---|---|---|---|
| SCI (Asynchronous) | Input clock cycle | $t_{Scyc}$ | 4 | — | $t_{PSCIcyc}$ | Figure 2.55 |
| | Input clock pulse width | $t_{SCKW}$ | 0.4 | 0.6 | $t_{Scyc}$ | |
| | Input clock rise time | $t_{SCKr}$ | — | 3 | ns | |
| | Input clock fall time | $t_{SCKf}$ | — | 3 | ns | |
| | Output clock cycle | $t_{Scyc}$ | 6 | — | $t_{PSCIcyc}$ | |
| | Output clock pulse width | $t_{SCKW}$ | 0.4 | 0.6 | $t_{Scyc}$ | |
| | Output clock rise time | $t_{SCKr}$ | — | 3 | ns | |
| | Output clock fall time | $t_{SCKf}$ | — | 3 | ns | |
| SCI (Simple I2C, Standard mode) | SDA input rise time | $t_{Sr}$ | — | 1000 | ns | Figure 2.56 |
| | SDA input fall time | $t_{Sf}$ | — | 300 | ns | |
| | SCL, SDA input spike pulse removal time | $t_{SP}$ | 0 | 2 × $NF_{cyc}$ *1 | ns | |
| | Data input setup time | $t_{SDAS}$ | 250 | — | ns | |
| | Data input hold time | $t_{SDAH}$ | 0 | — | ns | |
| | SCL, SDA capacitive load | $C_b$ | — | 400 | pF | |
| SCI (Simple I2C, Fast mode) | SDA input rise time | $t_{Sr}$ | — | 300 | ns | Figure 2.56 |
| | SDA input fall time | $t_{Sf}$ | — | 300 | ns | |
| | SCL, SDA input spike pulse removal time | $t_{SP}$ | 0 | 2 × $NF_{cyc}$ *1 | ns | |
| | Data input setup time | $t_{SDAS}$ | 100 | — | ns | |
| | Data input hold time | $t_{SDAH}$ | 0 | — | ns | |
| | SCL, SDA capacitive load | $C_b$ | — | 400 | pF | |



Downloaded from Arrow.com.

**Table 2.32 SCI timing (2 of 2)**

| Parameter | | | Symbol | Min. | Max. | Unit | Reference figure |
|---|---|---|---|---|---|---|---|
| SCI (Clock sync, Simple SPI) | SCK output clock cycle (master) | | $t_{SPcyc}$ | 2 | 65536 | $t_{PSClcyc}$ | Figure 2.57 to Figure 2.62 |
| | SCK input clock cycle (slave) | | | 2 | 65536 | | |
| | SCK clock high pulse width | | $t_{SPCKWH}$ | 0.4 | 0.6 | $t_{SPcyc}$ | |
| | SCK clock low pulse width | | $t_{SPCKWL}$ | 0.4 | 0.6 | $t_{SPcyc}$ | |
| | SCK clock rise/fall time | | $t_{SPCKR}$, $t_{SPCKF}$ | — | 3 | ns | |
| | Data input setup time | Internal clock | $t_{SU}$ | 7 | — | ns | |
| | | External clock | | 3 | — | | |
| | Data input hold time | Internal clock | $t_H$ | 3 | — | ns | |
| | | External clock | | 3 | — | | |
| | Data output delay time | Internal clock | $t_{OD}$ | — | 3 | ns | |
| | | External clock | | — | 12 | | |
| | Data output hold time | Internal clock | $t_{OH}$ | -3 | — | ns | |
| | | External clock | | 0 | — | | |
| | Data rise/fall time | | $t_{DR}$, $t_{DF}$ | — | 3 | ns | |
| | Slave access time | Internal clock | $t_{SA}$ | — | $3 \times t_{PSClcyc} + 12$ | ns | |
| | | External clock | | — | $3 \times t_{PSClcyc} + 12$ | | |
| | Slave output release time | Internal clock | $t_{REL}$ | — | $3 \times t_{PSClcyc} + 12$ | ns | |
| | | External clock | | — | $3 \times t_{PSClcyc} + 12$ | | |
| SCI (Simple SPI) | SS input setup time | | $t_{LEAD}$ | 1 | — | $t_{SPcyc}$ | |
| | SS input hold time | | $t_{LAG}$ | 1 | — | $t_{SPcyc}$ | |
| | SS input rise/fall time | | $t_{SSR}$, $t_{SSF}$ | — | 3 | ns | |

Note: $t_{PSClcyc}$: PCLKSCIn cycle

Note 1. $N_{Fcyc} = 4^n \times 2^{m-1} \times t_{PSClcyc}$
n: CCR2.CKS[1:0] (n = 0, 1, 2, 3)
m: CCR1.NFCS[2:0] (m = 1, 2, 3, 4)

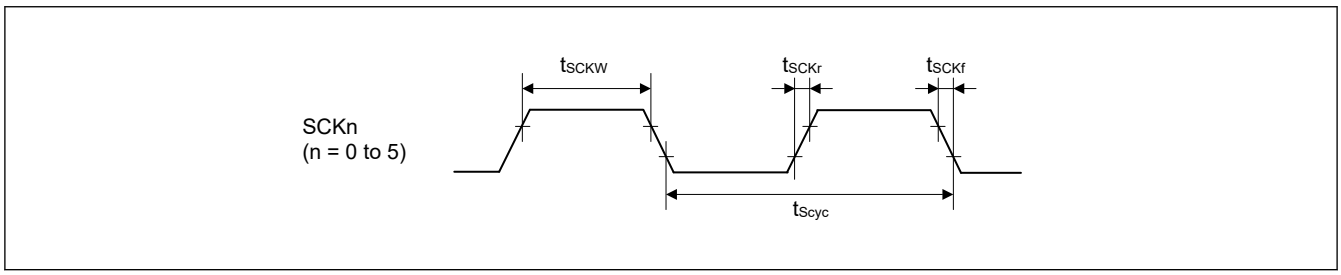


**Figure 2.55 SCK clock input/output timing**



Downloaded from Arrow.com.

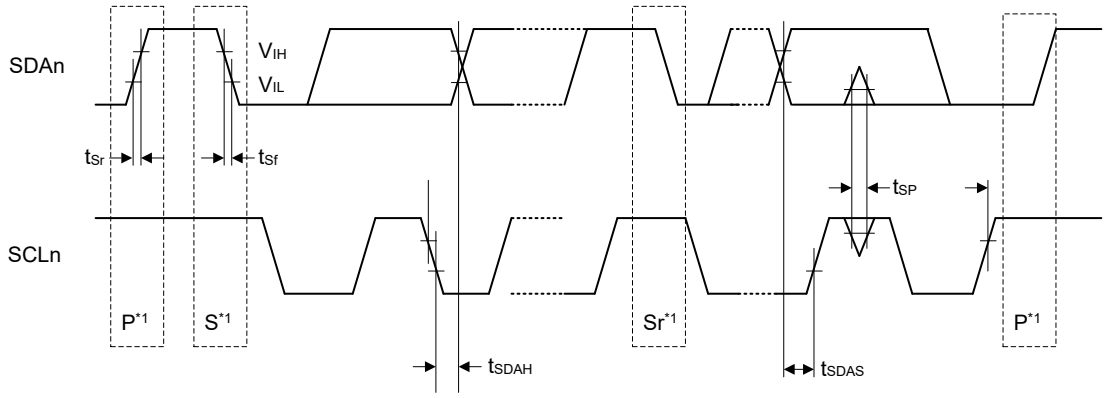


Note 1. S, P, and Sr indicate the following conditions.
S: Start condition
P: Stop condition
Sr: Restart condition

**Figure 2.56 SCI simple I2C mode timing**

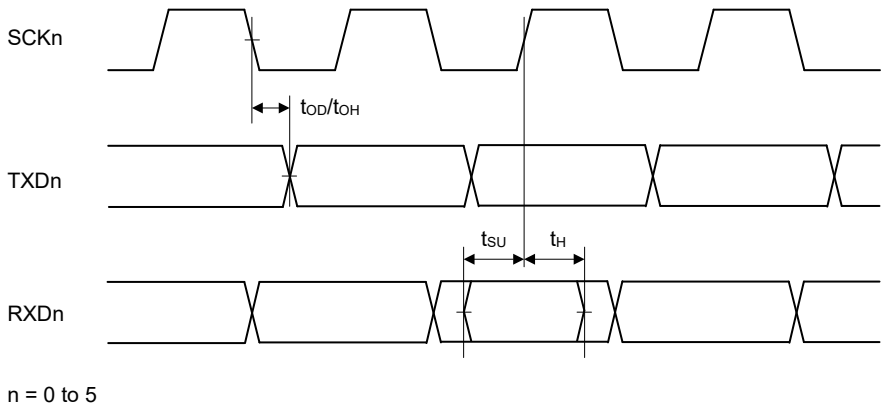


**Figure 2.57 SCI input/output timing in clock synchronous mode**

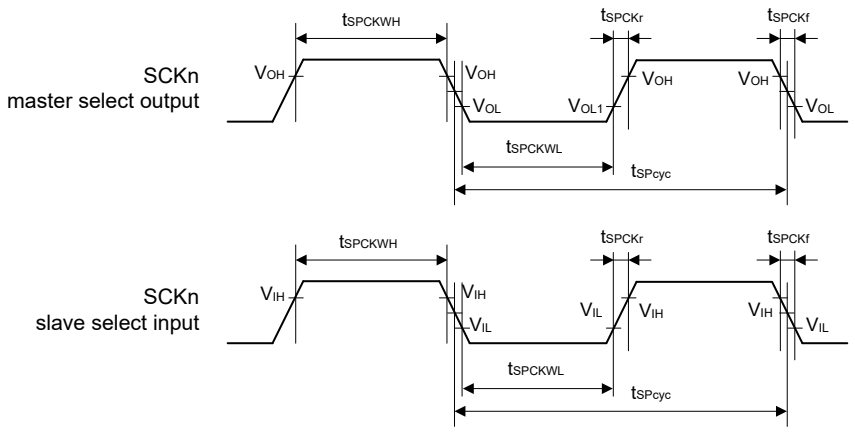


$V_{OH}$ = 0.7 × VCC33, $V_{OL}$ = 0.3 × VCC33, $V_{IH}$ = 0.7 × VCC33, $V_{IL}$ = 0.3 × VCC33

**Figure 2.58 SCI simple SPI mode clock timing**



Downloaded from Arrow.com.

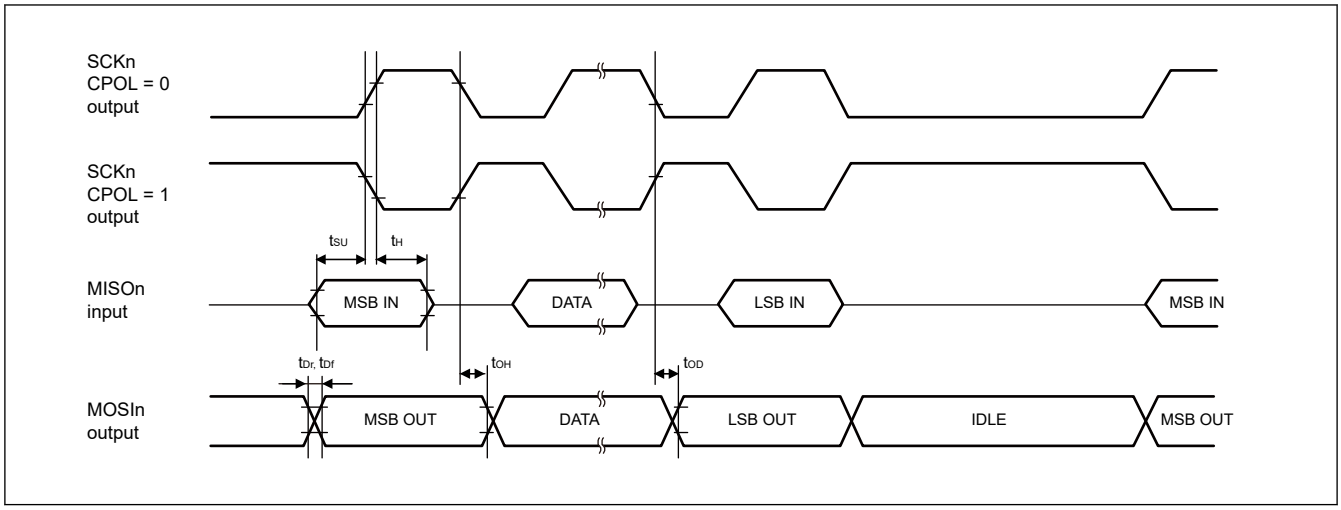


**Figure 2.59 SCI simple SPI mode timing for master when CPHA = 0**

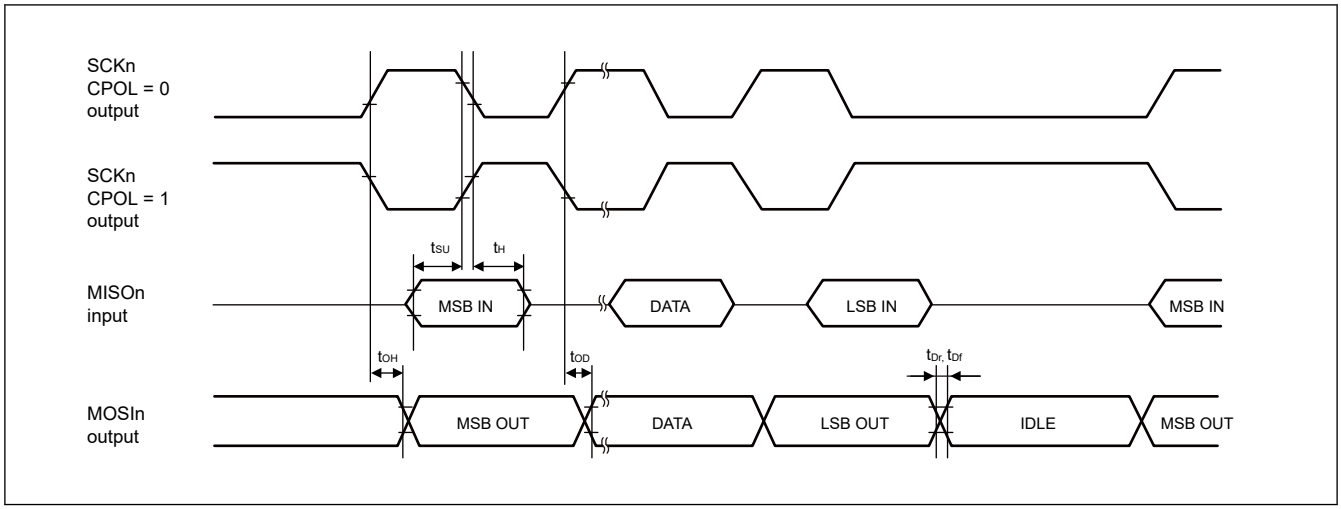


**Figure 2.60 SCI simple SPI mode timing for master when CPHA = 1**

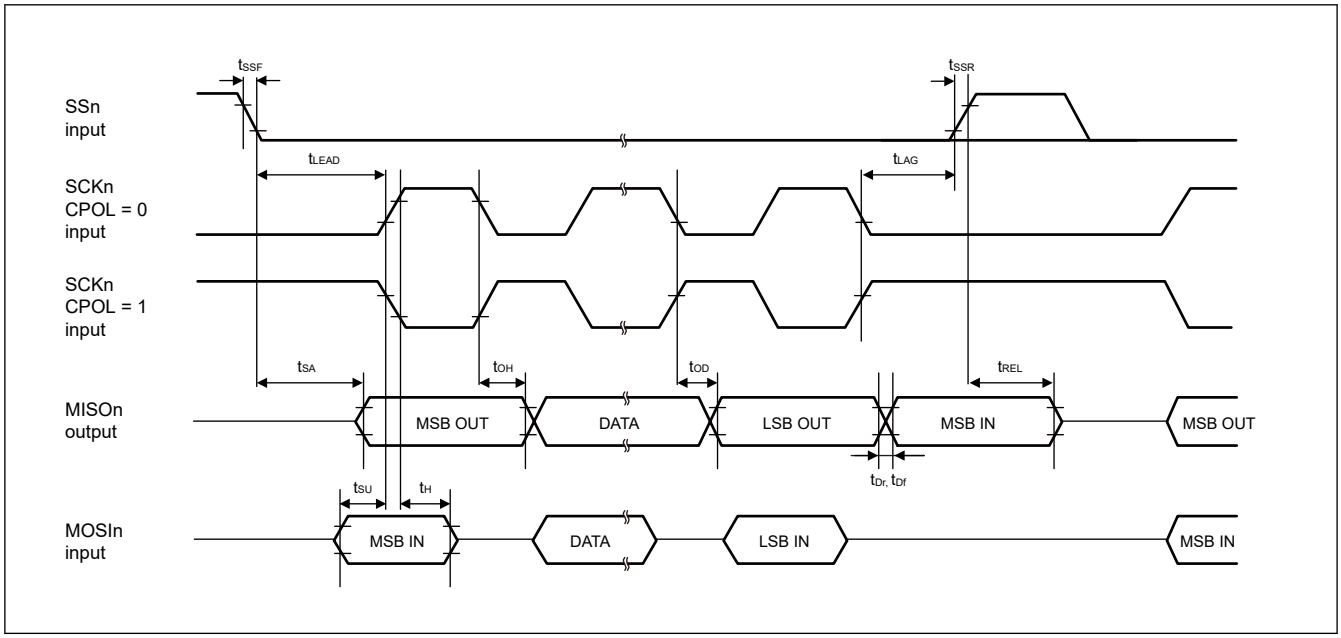


**Figure 2.61 SCI simple SPI mode timing for slave when CPHA = 0**



Downloaded from Arrow.com.

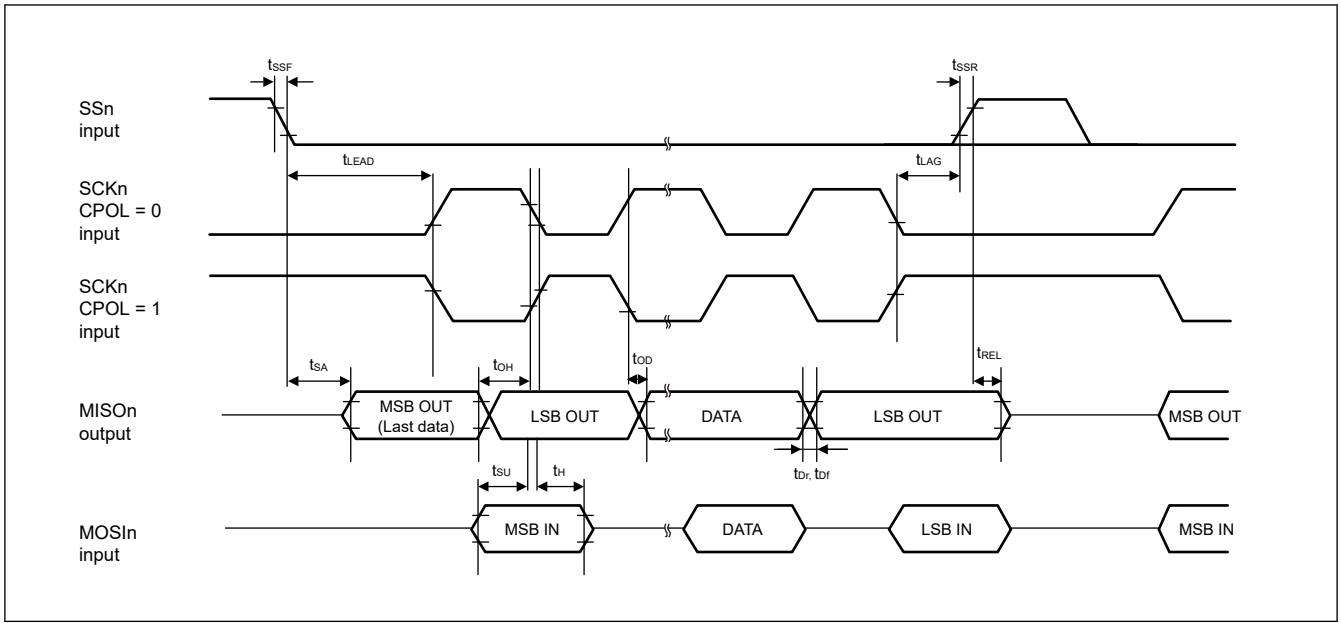


**Figure 2.62 SCI simple SPI mode timing for slave when CPHA = 1**

### 2.5.5.9 IIC Timing

Conditions: $V_{OL}$ = 0.4 V, $I_{OL}$ = 4 mA



Downloaded from Arrow.com.

**Table 2.33 IIC timing**

| Parameter | | Symbol | Min.*1 *2 | Max.*1 *2 | Unit | Reference figure |
|---|---|---|---|---|---|---|
| IIC (Standard-mode) | SCL input cycle time | $t_{SCL}$ | 6(12) × $t_{IICcyc}$ + 1300 | — | ns | Figure 2.63 |
| | SCL input high pulse width | $t_{SCLH}$ | 3(6) × $t_{IICcyc}$ + 300 | — | ns | |
| | SCL input low pulse width | $t_{SCLL}$ | 3(6) × $t_{IICcyc}$ + 300 | — | ns | |
| | SCL, SDA input rising time | $t_{sr}$ | — | 1000 | ns | |
| | SCL, SDA input falling time | $t_{sf}$ | — | 300 | ns | |
| | SCL, SDA input spike pulse removal time | $t_{SP}$ | 0 | 1(4) × $t_{IICcyc}$ | ns | |
| | SDA input bus free time | $t_{BUF}$ | 3(6) × $t_{IICcyc}$ + 300 | — | ns | |
| | Start condition input hold time | $t_{STAH}$ | $t_{IICcyc}$ + 300 | — | ns | |
| | Restart condition input setup time | $t_{STAS}$ | 1000 | — | ns | |
| | Stop condition input setup time | $t_{STOS}$ | 1000 | — | ns | |
| | Data input setup time | $t_{SDAS}$ | $t_{IICcyc}$ + 50 | — | ns | |
| | Data input hold time | $t_{SDAH}$ | 0 | — | ns | |
| | SCL, SDA capacitive load | $C_b$ | — | 400 | pF | |
| IIC (Fast-mode) | SCL input cycle time | $t_{SCL}$ | 6(12) × $t_{IICcyc}$ + 600 | — | ns | |
| | SCL input high pulse width | $t_{SCLH}$ | 3(6) × $t_{IICcyc}$ + 300 | — | ns | |
| | SCL input low pulse width | $t_{SCLL}$ | 3(6) × $t_{IICcyc}$ + 300 | — | ns | |
| | SCL, SDA input rising time | $t_{sr}$ | —*4 | 300 | ns | |
| | SCL, SDA input falling time | $t_{sf}$ | —*4 | 300 | ns | |
| | SCL, SDA input spike pulse removal time | $t_{SP}$ | 0 | 1(4) × $t_{IICcyc}$ | ns | |
| | SDA input bus free time | $t_{BUF}$ | 3(6) × $t_{IICcyc}$ + 300 | — | ns | |
| | Start condition input hold time | $t_{STAH}$ | $t_{IICcyc}$ + 300 | — | ns | |
| | Restart condition input setup time | $t_{STAS}$ | 300 | — | ns | |
| | Stop condition input setup time | $t_{STOS}$ | 300 | — | ns | |
| | Data input setup time | $t_{SDAS}$ | $t_{IICcyc}$ + 50 | — | ns | |
| | Data input hold time | $t_{SDAH}$ | 0 | — | ns | |
| | SCL, SDA capacitive load*3 | $C_b$ | — | 400 | pF | |

Note 1. $t_{IICcyc}$: IIC internal reference clock (IICΦ) cycle
Note 2. The value out of parentheses is applicable when the value of the ICMR3.NF[1:0] bits is 00b while the digital filter is enabled by setting ICFER.NFE = 1. The value within parentheses is applicable when the value of the ICMR3.NF[1:0] bits is 11b while the digital filter is enabled by setting ICFER.NFE = 1.
Note 3. Cb is the total capacitance of the bus lines.
Note 4. The minimum values are not specified for $t_{sr}$ and $t_{sf}$ in Fast-mode.



Downloaded from Arrow.com.

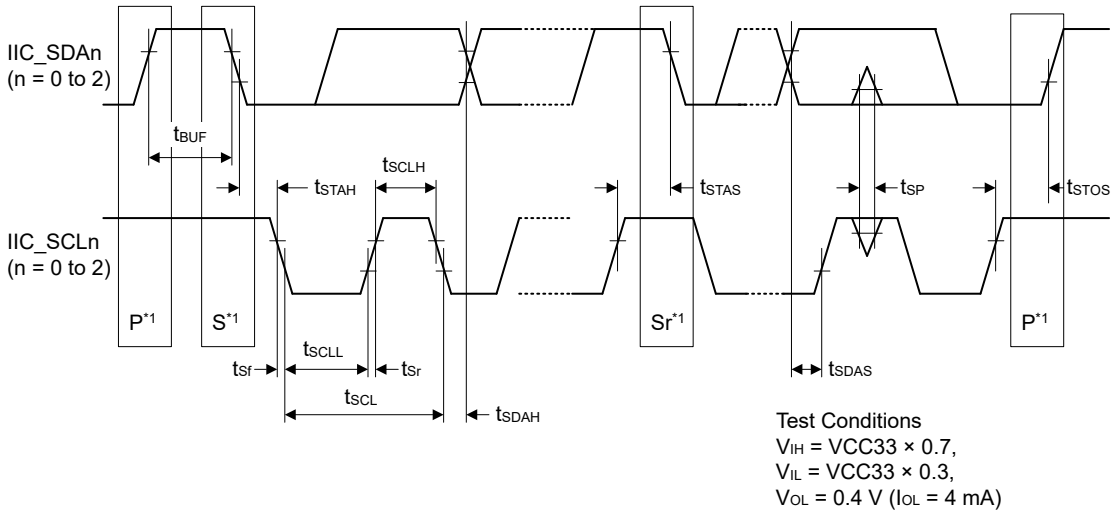


Note 1. S, P, and Sr indicate the following conditions.
S: Start condition
P: Stop condition
Sr: Restart condition

**Figure 2.63 IIC bus interface input/output timing**

### 2.5.5.10 CANFD Timing

**Table 2.34 CANFD timing**

| Parameter | | Symbol | CAN | | CANFD | | Unit | Reference figure |
|---|---|---|---|---|---|---|---|---|
| | | | Min. | Max. | Min. | Max. | | |
| CANFD | Internal delay time | $t_{node}$ | — | 100 | — | 50 | ns | Figure 2.64 |
| | Transmission rate | — | — | 1 | — | 8 | Mbps | |

Note: Internal delay time ($t_{node}$) = Internal transmission delay time ($t_{output}$) + Internal reception delay time ($t_{input}$)

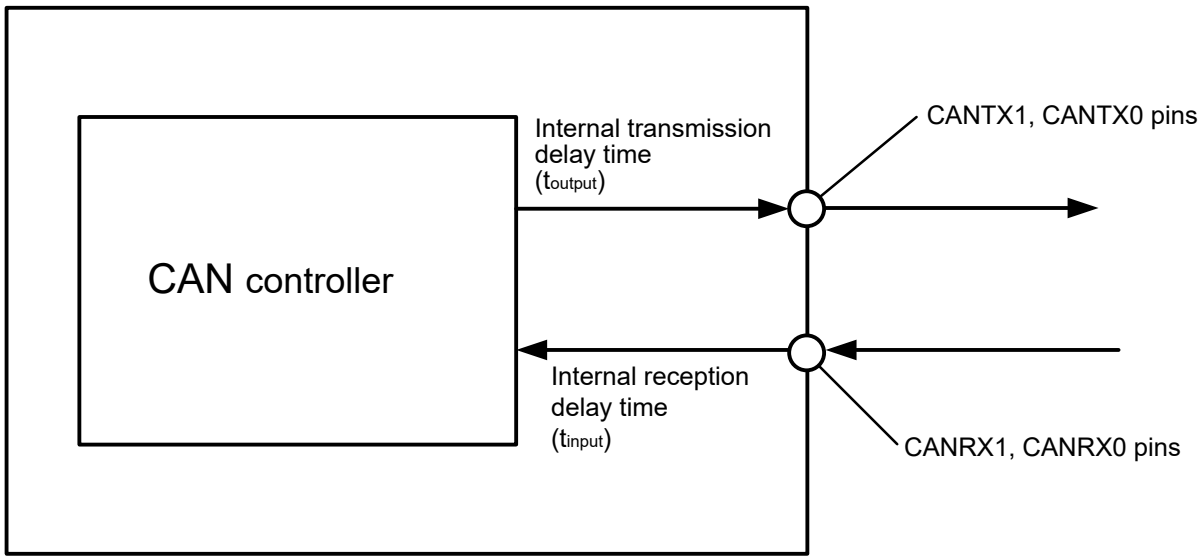


**Figure 2.64 CAN interface condition**



Downloaded from Arrow.com.

### 2.5.5.11 SPI Timing

**Table 2.35 SPI timing (1 of 2)**

Conditions: $V_{OH}$ = VCC33 × 0.5, $V_{OL}$ = VCC33 × 0.5, C = 30 pF

| Parameter | | Symbol | Min.*1 | Max.*1 | Unit*1 | Reference figure |
|---|---|---|---|---|---|---|
| RSPCK clock cycle | Master | $t_{SPcyc}$ | 2 | 4096 | $t_{SPIcyc}$ | Figure 2.65 |
| | Slave | | 2 | 4096 | | |
| RSPCK clock high level pulse width | Master | $t_{SPCKWH}$ | ($t_{SPcyc}$ − $t_{SPCKr}$ − $t_{SPCKf}$) / 2 − 2.5 | — | ns | |
| | Slave | | 1 | — | $t_{SPIcyc}$ | |
| RSPCK clock low level pulse width | Master | $t_{SPCKWL}$ | ($t_{SPcyc}$ − $t_{SPCKr}$ − $t_{SPCKf}$) / 2 − 2.5 | — | ns | |
| | Slave | | 1 | — | $t_{SPIcyc}$ | |
| RSPCK clock rising/falling time | Output | $t_{SPCKr}$, $t_{SPCKf}$ | — | 3 | ns | |
| | Input | | — | 1 | ns | |
| Data input setup time | Master | $t_{SU}$ | 5 | — | ns | Figure 2.66 to Figure 2.72 |
| | Slave | | 3 | — | | |
| Data input hold time | Master | $t_H$ | 3 | — | ns | |
| | Slave | | 3 | — | | |
| SSL setup time | Master | $t_{LEAD}$ | N × $t_{SPcyc}$ − 3*2 | N × $t_{SPcyc}$ + 3*2 | ns | Figure 2.66 to Figure 2.69 |
| | Slave | | 4 | — | $t_{SPIcyc}$ | |
| SSL hold time | Master | $t_{LAG}$ | N × $t_{SPcyc}$ − 3*3 | N × $t_{SPcyc}$ + 3*3 | ns | |
| | Slave | | 4 | — | $t_{SPIcyc}$ | |
| Continuous transmission delay | Master | $t_{TD}$ | $t_{SPcyc}$ + 2 × $t_{SPIcyc}$ | 8 × $t_{SPcyc}$ + 2 × $t_{SPIcyc}$ | ns | |
| | Slave | | $t_{SPcyc}$ + 5 × $t_{SPIcyc}$ | — | | |
| TI-SSP SS input setup time | | $t_{TISS}$ | 3 | — | ns | Figure 2.70 to Figure 2.72 |
| TI-SSP SS input hold time | | $t_{TISH}$ | 3 | — | ns | |
| TI-SSP next access time | | $t_{TIND}$ | M*4 | — | $t_{SPIcyc}$ | |
| TI-SSP Master SS output delay | | $t_{TISSOD}$ | -3 | 3 | ns | |
| TI-SSP Master OE delay 1 | | $t_{TIMOED1}$ | — | 2 | ns | |
| TI-SSP Master OE delay 2 | | $t_{TIMOED2}$ | — | 2 | ns | |
| TI-SSP Slave OE delay 1 | | $t_{TISOED1}$ | — | 12 | ns | |
| TI-SSP Slave OE delay 2 | | $t_{TISOED2}$ | — | 8 | ns | |
| Data output delay time | Master | $t_{OD}$ | — | 3 | ns | Figure 2.66 to Figure 2.72 |
| | Slave | | — | 12 | ns | |
| Data output hold time | Master | $t_{OH}$ | -3 | — | ns | |
| | Slave | | 3 | — | | |
| MOSI, MISO rising/falling time | Output | $t_{Dr}$, $t_{Df}$ | — | 3 | ns | |
| | Input | | — | 1 | μs | |
| SSL rising/falling time | Output | $t_{SSLr}$, $t_{SSLf}$ | — | 3 | ns | Figure 2.66, Figure 2.67 |
| | Input | | — | 1 | μs | |



Downloaded from Arrow.com.

**Table 2.35 SPI timing (2 of 2)**

Conditions: $V_{OH}$ = VCC33 × 0.5, $V_{OL}$ = VCC33 × 0.5, C = 30 pF

| Parameter | Symbol | Min.*1 | Max.*1 | Unit*1 | Reference figure |
|---|---|---|---|---|---|
| Slave access time | $t_{SA}$ | — | 12 | ns | Figure 2.68, Figure 2.69 |
| Slave output release time | $t_{REL}$ | — | 12 | ns | |

Note 1. $t_{SPIcyc}$: PCLKSPIn cycle
Note 2. SPCKD set value + 1 (1 to 8)
Note 3. SSLND set value + 1 (1 to 8)
Note 4. SSLND set value + 2 (2 to 9)

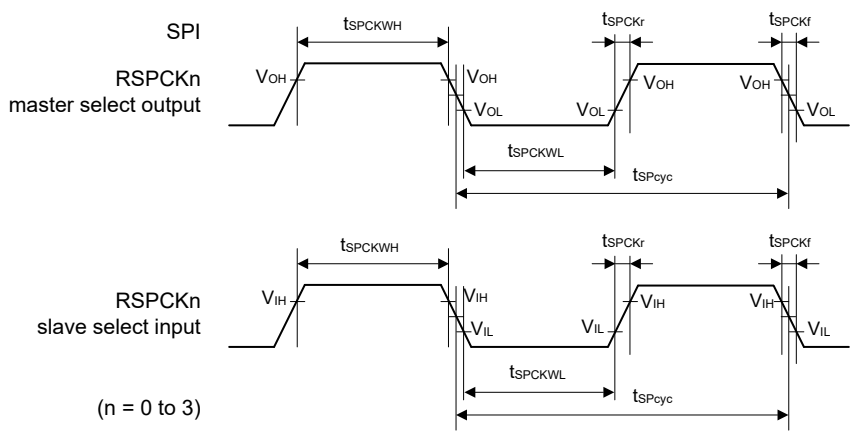


$V_{OH}$ = VCC33 - 0.5 V, $V_{OL}$ = 0.4 V, $V_{IH}$ = 2.4 V, $V_{IL}$ = 0.8 V

**Figure 2.65 SPI clock timing**

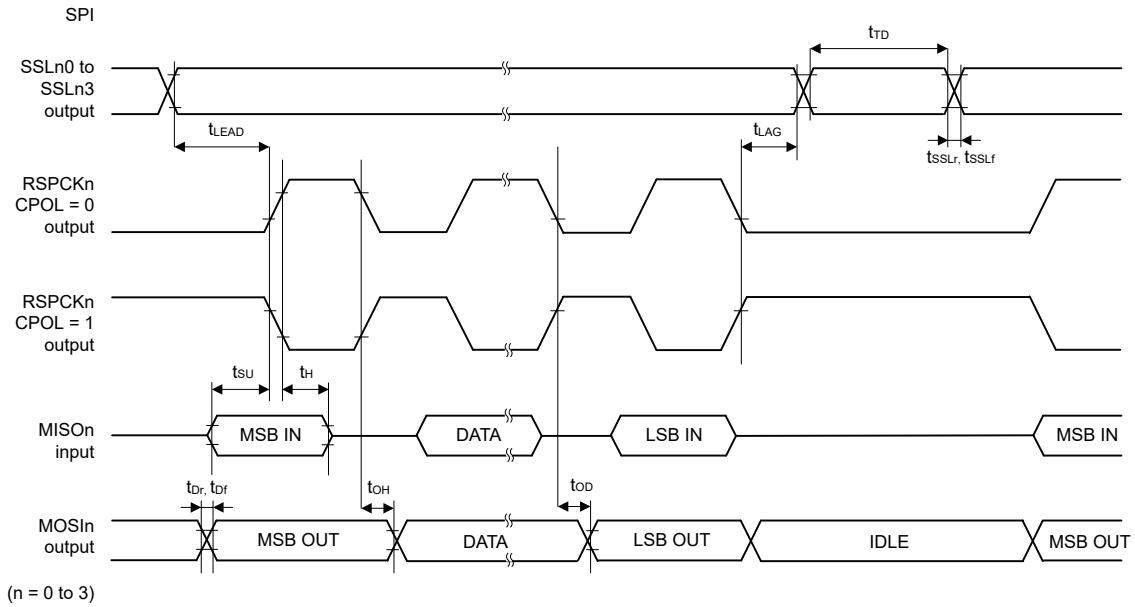


**Figure 2.66 SPI timing (Master, Motorola SPI, CPHA = 0)**



Downloaded from Arrow.com.

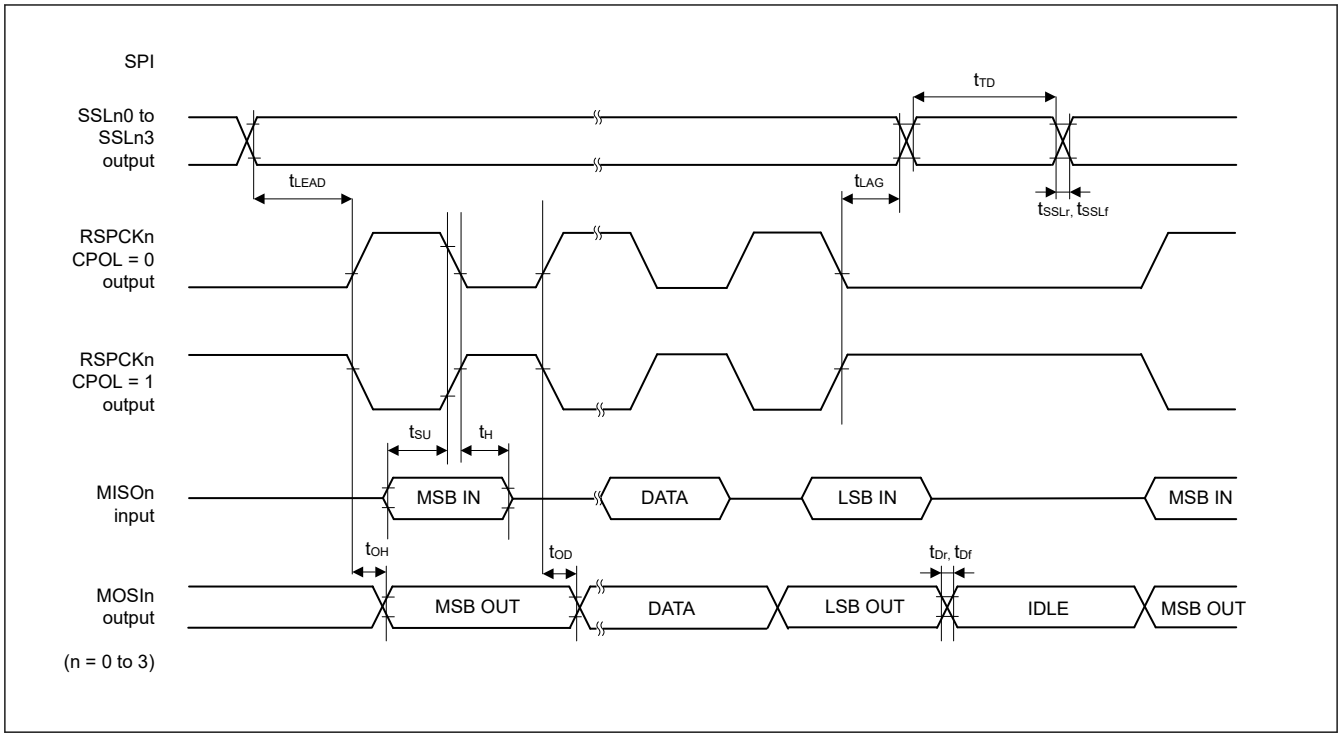


**Figure 2.67 SPI timing (Master, Motorola SPI, CPHA = 1)**

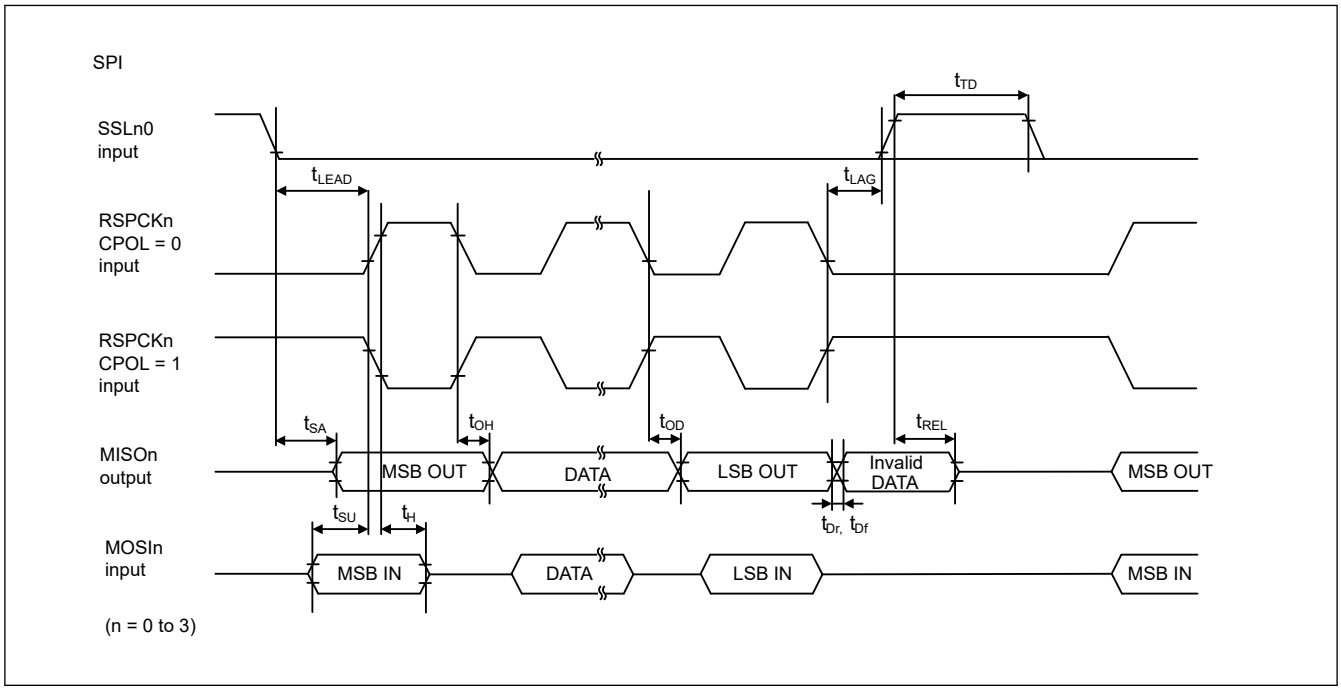


**Figure 2.68 SPI timing (Slave, Motorola SPI, CPHA = 0)**



Downloaded from Arrow.com.

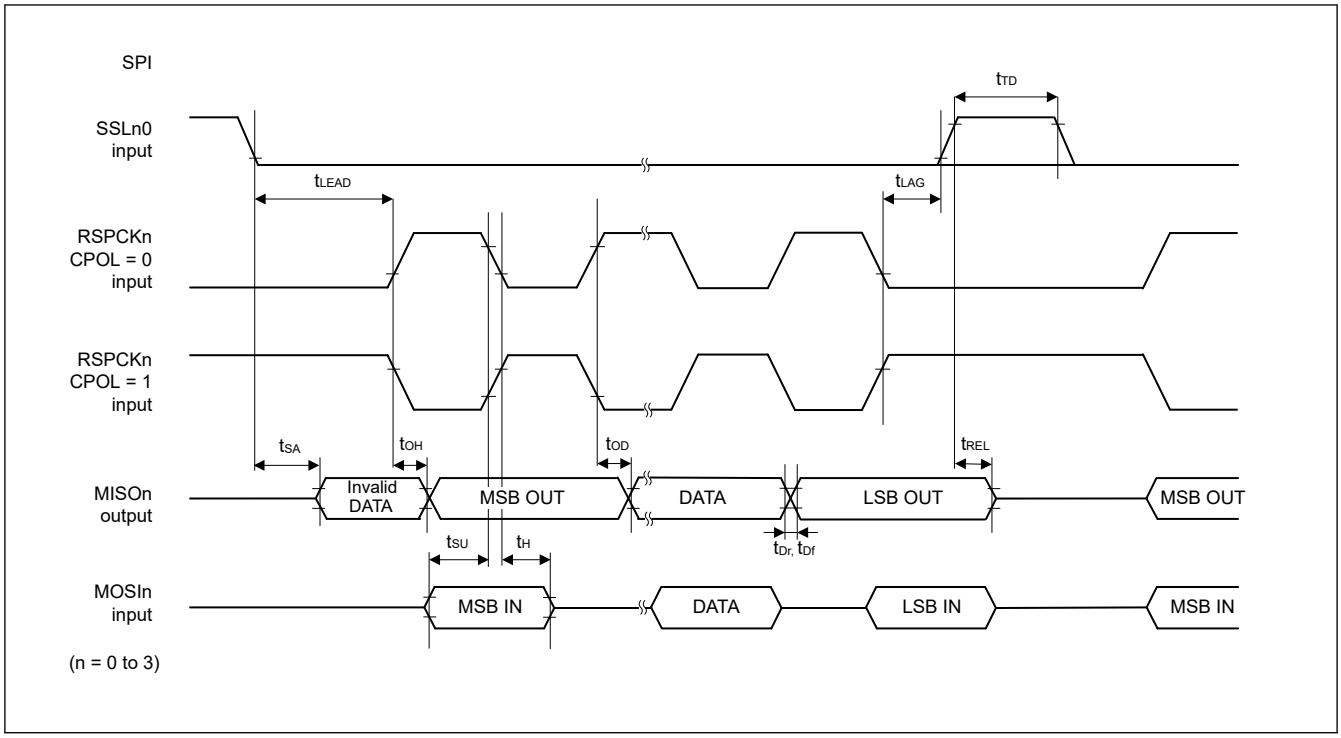


**Figure 2.69 SPI timing (Slave, Motorola SPI, CPHA = 1)**

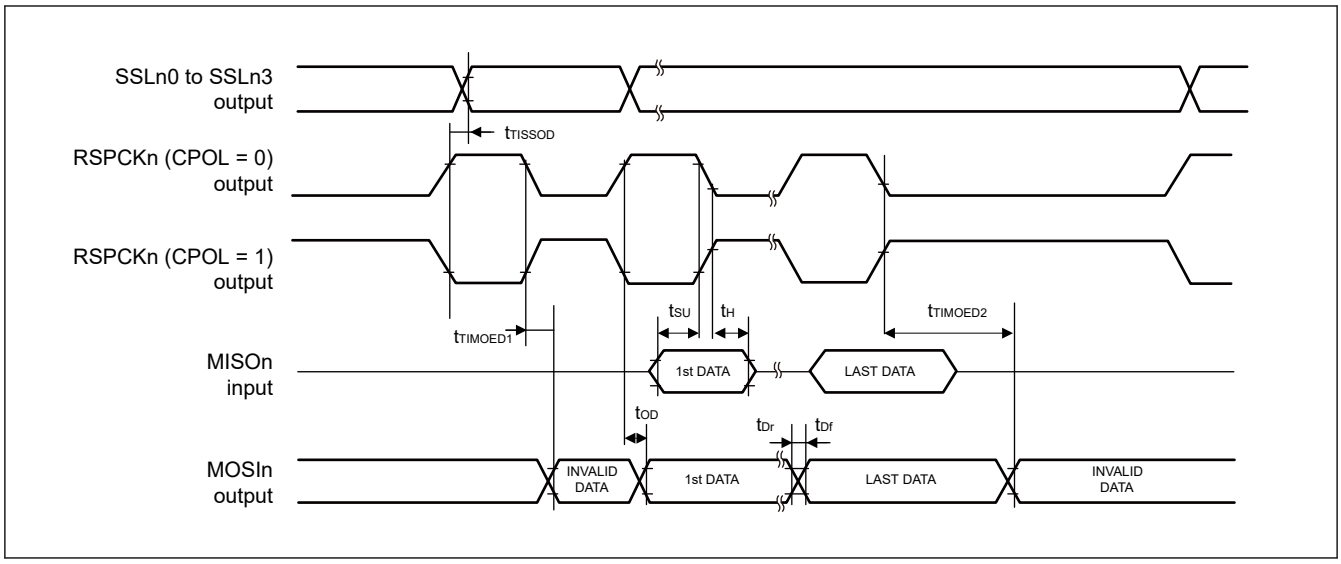


**Figure 2.70 SPI timing (Master, TI SSP)**



Downloaded from Arrow.com.

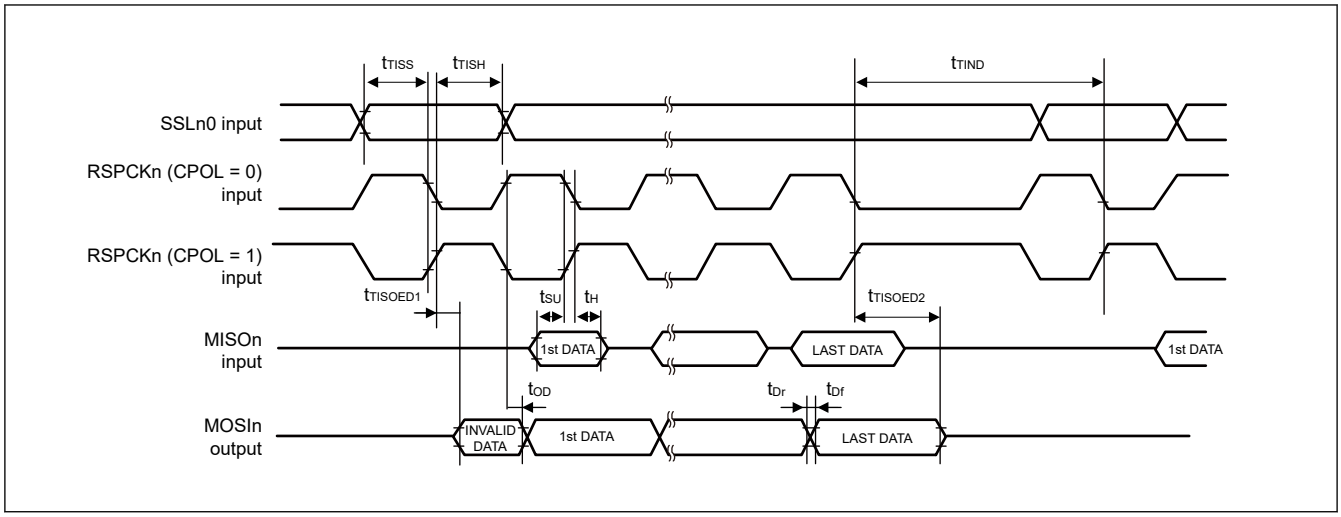


**Figure 2.71 SPI timing (Slave, TI-SSP, with delay in burst transfer)**

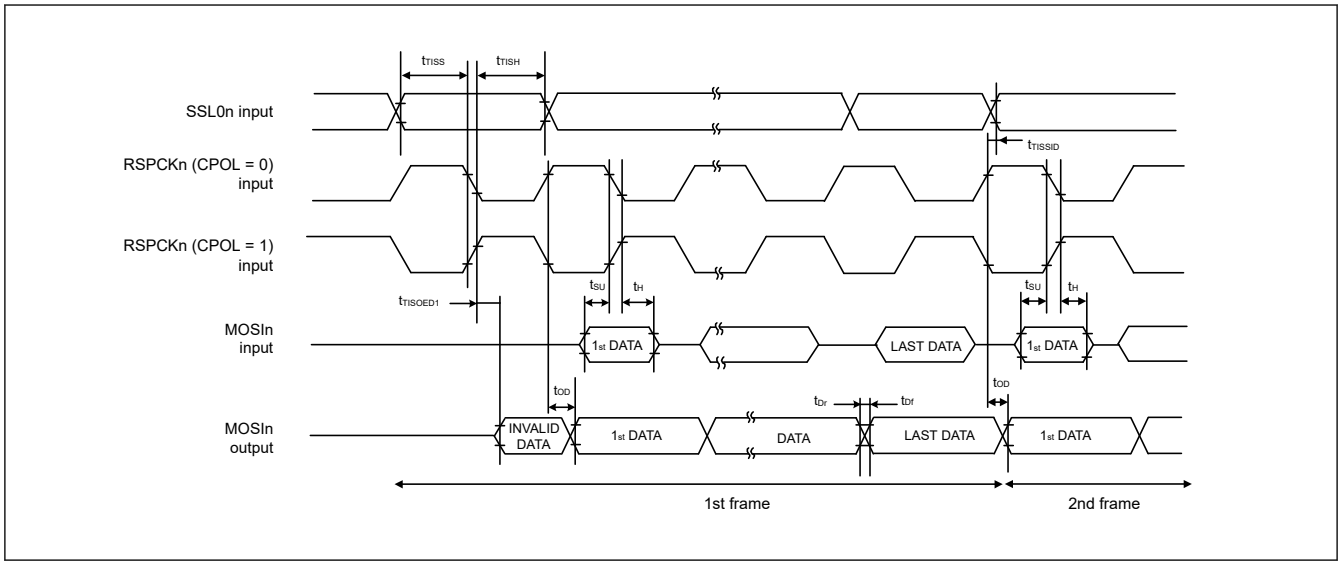


**Figure 2.72 SPI timing (Slave, TI-SSP, without delay in burst transfer)**

### 2.5.5.12 xSPI Timing

Conditions:

Single end Clock

$V_{OH}$ = VCC18 × 0.5, $V_{OL}$ = VCC18 × 0.5, C = 15 pF (1.8 V)

$V_{OH}$ = VCC33 × 0.5, $V_{OL}$ = VCC33 × 0.5, C = 15 pF (3.3 V)

Data

$V_{OH}$ = VCC18 × 0.5, $V_{OL}$ = VCC18 × 0.5, C = 15 pF (1.8 V)

$V_{OH}$ = VCC33 × 0.5, $V_{OL}$ = VCC33 × 0.5, C = 15 pF (3.3 V)



Downloaded from Arrow.com.

**Table 2.36 xSPI timing**

| Parameter | | Symbol | 1.8 V Min. | 1.8 V Max. | 3.3 V Min. | 3.3 V Max. | Unit | Reference figure |
|---|---|---|---|---|---|---|---|---|
| Cycle time | SDR | $t_{PERIOD}$ | 7.5 | — | 13.3 | — | ns | Figure 2.73 |
| | DDR | | 10.0 | — | 13.3 | — | ns | |
| Clock output slew rate | | $t_{SRck}$ | 0.75/0.56*2 | — | 0.56 | — | V/ns | |
| Clock duty cycle distortion | | $t_{CKDCD}$ | 0.0 | $t_{PERIOD}$ × 0.05 | 0.0 | $t_{PERIOD}$ × 0.05 | ns | |
| Clock minimum pulse width | | $t_{CKMPW}$ | $t_{PERIOD}$ × 0.45 | — | $t_{PERIOD}$ × 0.45 | — | ns | |
| Differential clock crossing voltage | | $V_{OX(AC)}$ | 0.4 × VCC18 | 0.6 × VCC18 | — | — | V | |
| DS duty cycle distortion | | $t_{DSDCD}$ | 0.0 | $t_{PERIOD}$ × 0.04 | 0.0 | $t_{PERIOD}$ × 0.04 | ns | |
| DS minimum pulse width | | $t_{DSMPW}$ | $t_{PERIOD}$ × 0.41 | — | $t_{PERIOD}$ × 0.41 | — | ns | |
| Data input/output slew rate | | $t_{SR}$ | 0.75/0.56*2 | — | 0.56 | — | V/ns | |
| Data input setup time (to CK) | SDR | $t_{SU}$ | 2.0 | — | 2.4 | — | ns | Figure 2.74 |
| Data input hold time (to CK) | | $t_H$ | 1.0 | — | 1.0 | — | ns | |
| Data output delay time | | $t_{OD}$ | — | 1.0*3 | — | 1.4*3 | ns | |
| Data output hold time | | $t_{OH}$ | -1.0 | — | -2.3 | — | ns | |
| Data output buffer off time | | $t_{BOFF}$ | -1.0 | — | -2.3 | — | ns | |
| Data input setup time (to DS) | DDR*1 *3 | $t_{SU}$ | -0.8 | — | -0.8 | — | ns | Figure 2.75, Figure 2.76 |
| Data input hold time (to DS) | | $t_H$ | $t_{PERIOD}$ × 0.41 - 0.8 | — | $t_{PERIOD}$ × 0.41 - 0.8 | — | ns | |
| Data output setup time (to CK) | | $t_{SUO}$ | 1.0 | — | 1.0 | — | ns | |
| Data output hold time (to CK) | | $t_{HO}$ | 1.0 | — | 1.0 | — | ns | |
| CS low to clock high | | $t_{CSLCKH}$ | 6.0/8.0*2 *4 | — | 8.0*4 | — | ns | Figure 2.74 to Figure 2.76 |
| Clock low to CS high | | $t_{CKLCSH}$ | 6.0/8.0*2 | — | 8.0 | — | ns | |
| CS high time | | $t_{CSTD}$ | 1 | 16 | 1 | 16 | $t_{PERIOD}$ | |
| DS low to CS high | | $t_{DSLCSH}$ | 6.0/8.0*2 *5 | — | 10.6*5 | — | ns | Figure 2.77 |
| CS high to DS tri-state | | $t_{CSHDST}$ | 0.0 | $t_{PERIOD}$ | 0.0 | $t_{PERIOD}$ | ns | |
| CS low to DS low *8 | | $t_{CSLDSL}$ | 0.0 | 16.0 *9 | 0.0 | 20.0 *9 | ns | |
| DS tri-state to CS low | | $t_{DSTCSL}$ | 0.0 | — | 0.0 | — | ns | |
| CK low to DS low *6 | | $t_{CKLDSL}$ | — | (0.45 + e) × $t_{PERIOD}$ - 2 *7 | — | (0.45 + e) × $t_{PERIOD}$ - 2 *7 | ns | |

Note 1. The DS shift setting (WRAPCFG.DSSFTCSx[4:0]) is 01000b for xSPI200.
Note 2. Specification at 133 MHz / Specification at 100 MHz
Note 3. These are values when the OEN assertion is extended in the Output Enable Asserting extension bit (COMCFG.OEASTEX = 1).
Note 4. These are the values when the CS assertion is extended in the CS asserting extension bit (LIOCFGCSn.CSASTEX = 1).
Note 5. These are the values when the $t_{CKLDSL}$ constraint is satisfied.
Note 6. This constraint is necessary only to satisfy the $t_{DSLCSH}$ requirement in JESD251, which specifies that $t_{DSLCSH}$ must be at least 80% of $t_{PERIOD}$. Set LIOCFGCSn.CSNEGEX to the appropriate value to ensure the memory specification complies with this constraint.
Note 7. e = LIOCFGCSn.CSNEGEX
Note 8. If the DS is high during the command and modifier phase when using JESD251 Profile 2.0 memory, the time from CS low to DS high must also meet this specification.
Note 9. When using JESD251 Profile 1.0 memory or JESD251 Profile 2.0 memory with LIOCFGCSn.LATEMD set to 0, this constraint does not apply if the internal pull-down resistor of the DS pin is enabled.



Downloaded from Arrow.com.

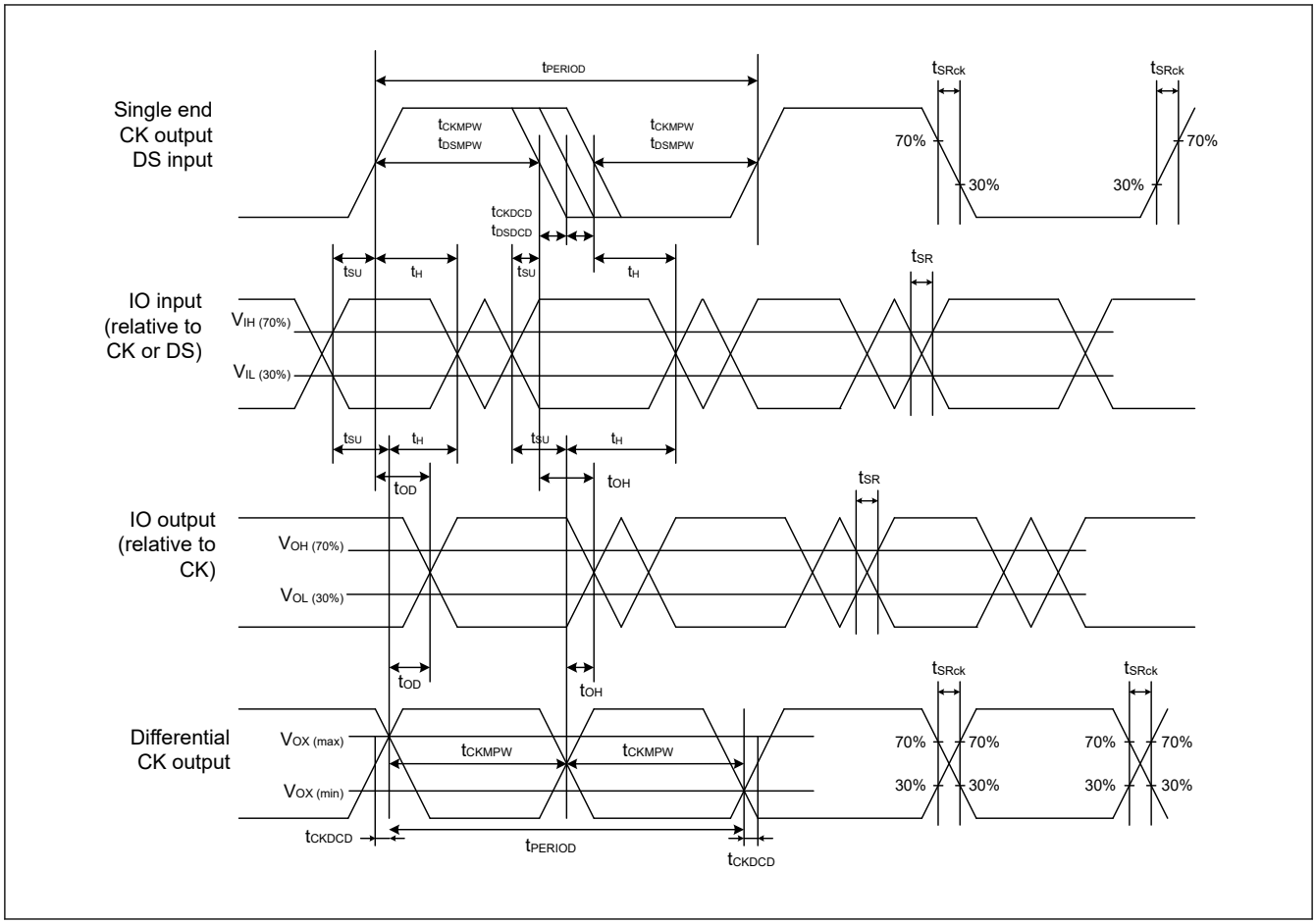


**Figure 2.73 xSPI clock / DS timing**

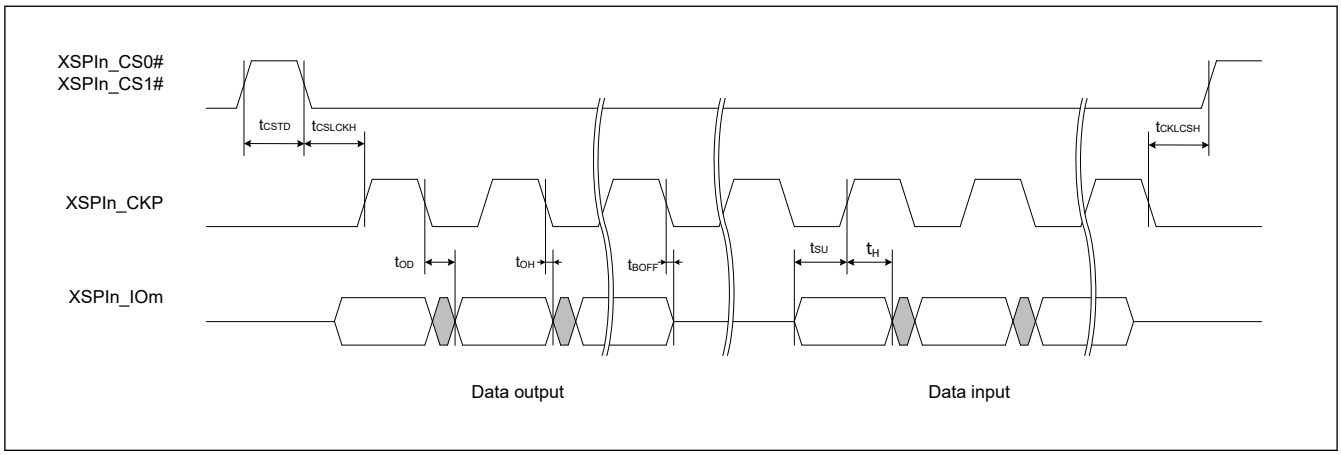


**Figure 2.74 SDR transmit/receive timing (1S-1S-1S, 1S-2S-2S, 2S-2S-2S, 1S-4S-4S, 4S-4S-4S)**



Downloaded from Arrow.com.

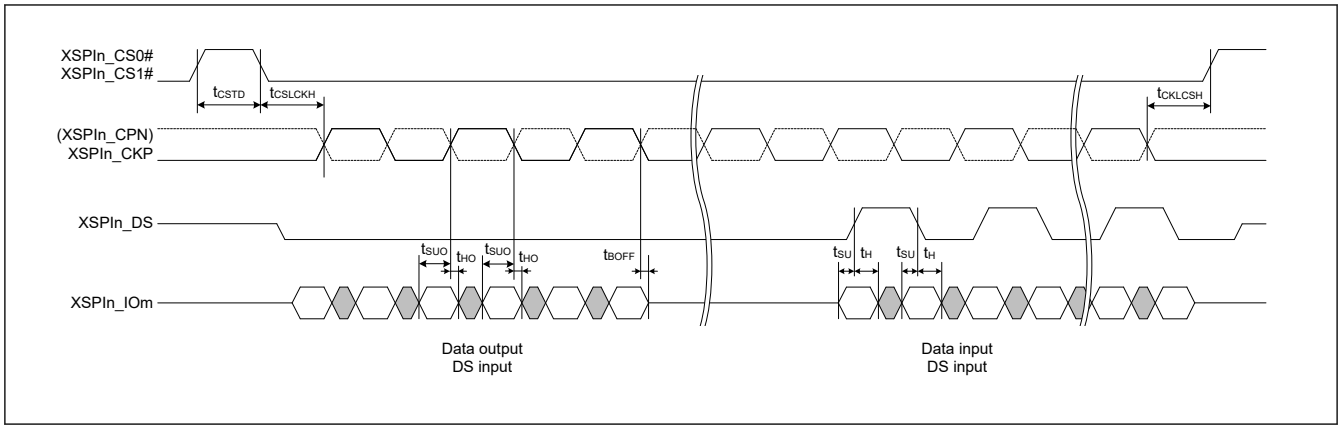


**Figure 2.75 DDR transmit/receive timing (4S-4D-4D, 8D-8D-8D)**

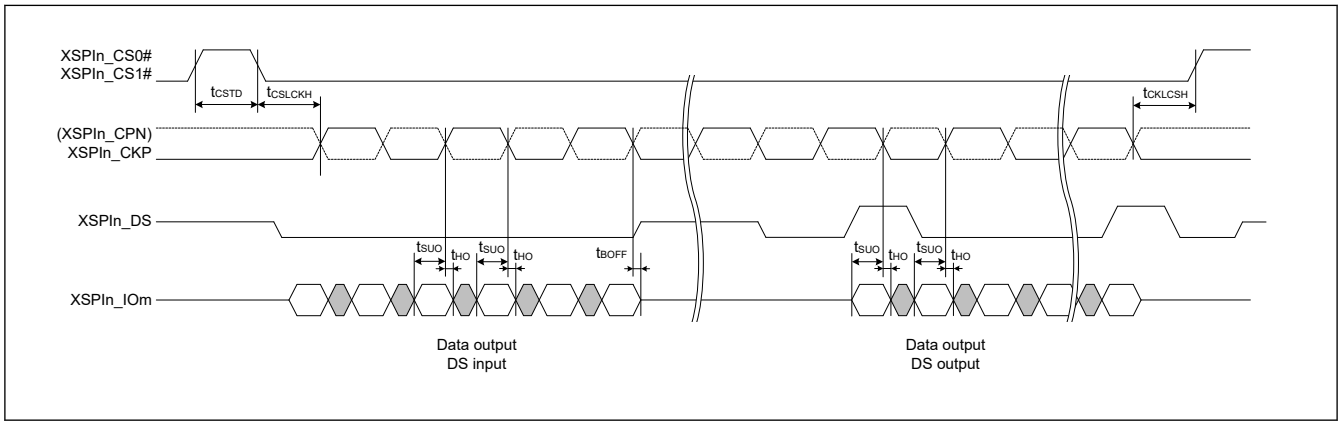


**Figure 2.76 DDR transmit/receive timing (HyperRAM write)**

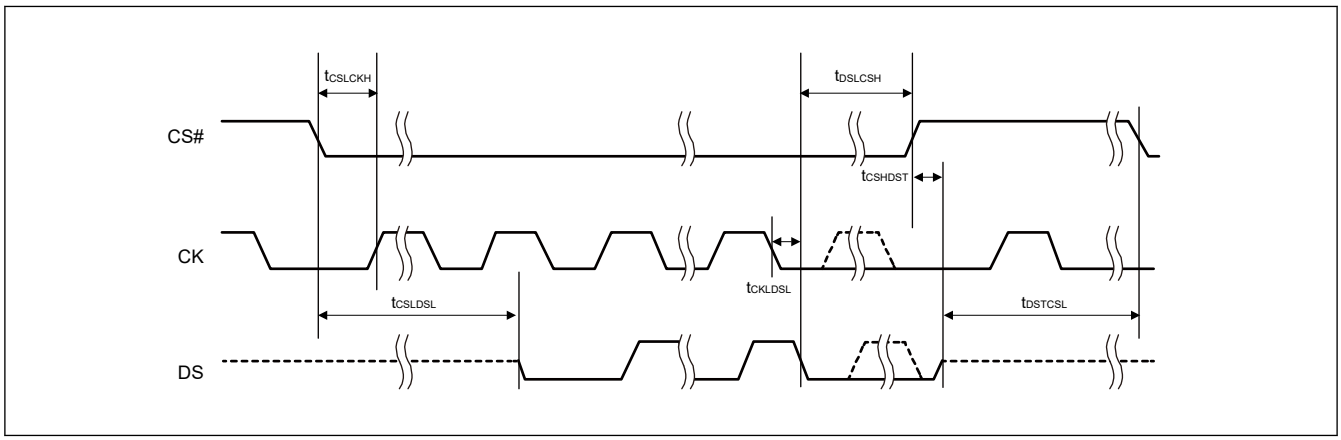


**Figure 2.77 DS to CS signal timing**

### 2.5.5.13 Delta-Sigma Interface Timing

Conditions: $V_{OH}$ = VCC33 × 0.5, $V_{OL}$ = VCC33 × 0.5, C = 30 pF



Downloaded from Arrow.com.

**Table 2.37 ΔΣ interface timing**

| Parameter | | | Symbol | Min. | Max. | Unit | Reference figure |
|---|---|---|---|---|---|---|---|
| DSMIF | Clock cycle | Master | $t_{DScyc}$ | 40 | 200 | ns | Figure 2.78 |
| | | Slave | | 40 | 200 | | |
| | Clock high level | Master | $t_{DSCKWH}$ | 16 | — | ns | |
| | | Slave | | 16 | — | | |
| | Clock low level | Master | $t_{DSCKWL}$ | 16 | — | ns | |
| | | Slave | | 16 | — | | |
| | Setup time | Master | $t_{SU}$ | 15 | — | ns | Figure 2.79, Figure 2.80 |
| | | Slave | | 5 | — | | |
| | Hold time | Master | $t_H$ | 0 | — | ns | |
| | | Slave | | 5 | — | | |

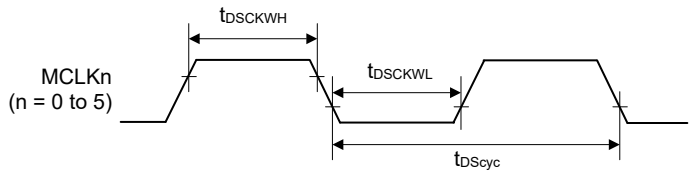


**Figure 2.78 Clock input/output timing**

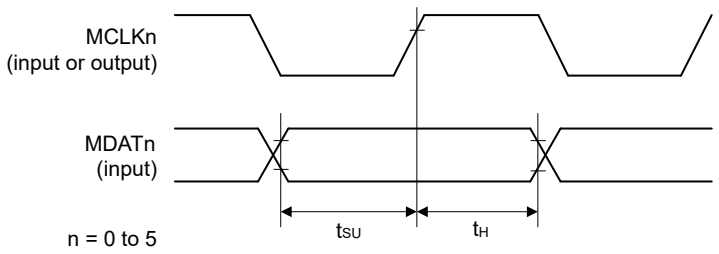


**Figure 2.79 Reception timing (MCLKn rising synchronous)**

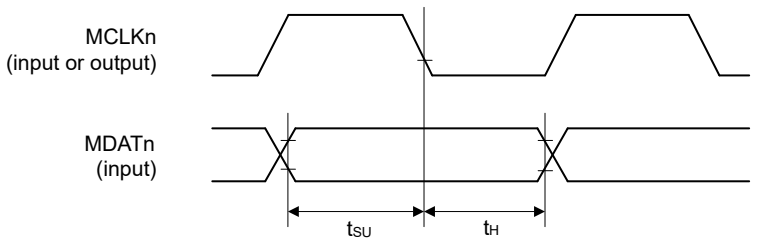


**Figure 2.80 Reception timing (MCLKn falling synchronous)**

### 2.5.5.14 Ethernet Interface Timing

Conditions:

$V_{OH}$ = VCC18 × 0.5, $V_{OL}$ = VCC18 × 0.5, C = 15 pF (RGMII)*1



Downloaded from Arrow.com.

$V_{OH}$ = VCC33 × 0.5, $V_{OL}$ = VCC33 × 0.5, C = 25 pF (RMII)

$V_{OH}$ = VCC33 × 0.5, $V_{OL}$ = VCC33 × 0.5, C = 30 pF (MII)

**Table 2.38 Ethernet interface timing**

| Parameter | | | Symbol | Min. | Max. | Unit | Reference figure |
|---|---|---|---|---|---|---|---|
| Ethernet (RGMII) | ETHn_TXCLK, ETHn_RXCLK cycle time duration | 1 Gbps | $t_{RGMIIck}$ | 7.2 | 8.8 | ns | Figure 2.81 |
| | | 100 Mbps | | 36 | 44 | | |
| | | 10 Mbps | | 360 | 440 | | |
| | ETHn_TXCLK, ETHn_RXCLK frequency | 1 Gbps | — | 125 − 50 ppm | 125 + 50 ppm | MHz | |
| | | 100 Mbps | | 25 − 50 ppm | 25 + 50 ppm | | |
| | | 10 Mbps | | 2.5 − 50 ppm | 2.5 + 50 ppm | | |
| | ETHn_TXCLK, ETHn_RXCLK duty cycle | 1 Gbps | — | 45 | 55 | % | |
| | | 100 Mbps<br>10 Mbps | | 40 | 60 | | |
| | ETHn_TXCLK, ETHn_TXD0 to ETHn_TXD3, ETHn_TXEN (TX_CTL), ETHn_RXCLK, ETHn_RXD0 to ETHn_RXD3, ETHn_RXDV (RX_CTL) rise/fall time | | $t_{RGMIIr}$, $t_{RGMIIf}$ *1 | — | 0.75 | ns | |
| | ETHn_TXD0 to ETHn_TXD3, ETHn_TXEN (TX_CTL) to ETHn_TXCLK output skew | | $t_{RGMIIos}$ | −0.5 | 0.5 | ns | |
| | ETHn_RXD0 to ETHn_RXD3, ETHn_RXDV (RX_CTL) setup time | | $t_{RGMIIs}$ | 1 | — | ns | |
| | ETHn_RXD0 to ETHn_RXD3, ETHn_RXDV (RX_CTL) hold time | | $t_{RGMIIh}$ | 1 | — | ns | |
| Ethernet (RMII) | ETHn_RXCLK cycle time | | $t_{RMIIck}$ | 20 | — | ns | Figure 2.82 |
| | ETHn_RXCLK frequency Typ. 50 MHz | | — | 50 − 50 ppm | 50 + 50 ppm | MHz | |
| | ETHn_RXCLK duty | | — | 35 | 65 | % | |
| | ETHn_RXCLK rise/fall time | | $t_{RMIIckr}$, $t_{RMIIckf}$ | 0.5 | 3.5 | ns | |
| | ETHn_TXD0, ETHn_TXD1, ETHn_TXEN output delay time | | $t_{RMIId}$ | 2.5 | 12 | ns | |
| | ETHn_RXD0, ETHn_RXD1, ETHn_RXER, ETHn_RXDV (CRS_DV) setup time | | $t_{RMIIs}$ | 4 | — | ns | |
| | ETHn_RXD0, ETHn_RXD1, ETHn_RXER, ETHn_RXDV (CRS_DV) hold time | | $t_{RMIIh}$ | 2 | — | ns | |
| | ETHn_TXD0, ETHn_TXD1, ETHn_TXEN, ETHn_RXD0, ETHn_RXD1, ETHn_RXER, ETHn_RXDV (CRS_DV) rise/fall time | | $t_{RMIIr}$, $t_{RMIIf}$ | 0.5 | 4 | ns | |
| Ethernet (MII) | ETHn_TXCLK, ETHn_RXCLK cycle time | 100 Mbps | $t_{MIIck}$ | 40 | — | ns | Figure 2.83 |
| | | 10 Mbps | | 400 | — | | |
| | ETHn_TXCLK, ETHn_RXCLK frequency | 100 Mbps | — | 25 − 50 ppm | 25 + 50 ppm | MHz | |
| | | 10 Mbps | | 2.5 − 50 ppm | 2.5 + 50 ppm | | |
| | ETHn_TXD0 to ETHn_TXD3, ETHn_TXEN, ETHn_TXER output delay time | | $t_{MIId}$ | 1 | 20 | ns | |
| | ETHn_RXD0 to ETHn_RXD3, ETHn_RXDV, ETHn_RXER setup time | | $t_{MIIs}$ | 10 | — | ns | |
| | ETHn_RXD0 to ETHn_RXD3, ETHn_RXDV, ETHn_RXER hold time | | $t_{MIIh}$ | 10 | — | ns | |

Note 1. Measurement condition of tRGMIIr and tRGMIIf is FIGURE 3 in Reduced Gigabit Media Independent Interface (RGMII) 12/10/2000 Version 1.3.



Downloaded from Arrow.com.

**Table 2.39 Ethernet interface timing (MAC to MAC connection mode)**

| Parameter | | Symbol | Min. | Max. | Unit | Reference figure |
|---|---|---|---|---|---|---|
| Ethernet (RGMII) | ETH2_TXCLK, ETH2_RXCLK cycle time | $t_{MRGMIIck}$ | 7.2 | 8.8 | ns | Figure 2.84 |
| | ETH2_TXCLK, ETH2_RXCLK frequency Typ. 125 MHz | — | 125 − 50 ppm | 125 + 50 ppm | MHz | |
| | ETH2_TXCLK, ETH2_RXCLK duty cycle | — | 45 | 55 | % | |
| | ETH2_TXCLK, ETH2_TXD0 to ETH2_TXD3, ETH2_TXEN (TX_CTL), ETH2_RXCLK, ETH2_RXD0 to ETH2_RXD3, ETH2_RXDV (RX_CTL) rise/fall time | $t_{MRGMIIr}$, $t_{MRGMIIf}$ | — | 0.75 | ns | |
| | ETH2_TXD0 to ETHn_TXD3, ETHn_TXEN (TX_CTL) output skew | $t_{MRGMIIos}$ | — | 0.6 | ns | |
| | ETH2_TXD0 to ETH2_TXD3, ETH2_TXEN (TX_CTL) output setup time | $t_{MRGMIIso}$ | 1.1 | — | ns | |
| | ETH2_TXD0 to ETH2_TXD3, ETH2_TXEN (TX_CTL) output hold time | $t_{MRGMIIho}$ | 1.1 | — | ns | |
| | ETH2_RXD0 to ETH2_RXD3, ETH2_RXDV (RX_CTL) input setup time | $t_{MRGMIIsi}$ | -0.7 | — | ns | |
| | ETH2_RXD0 to ETH2_RXD3, ETH2_RXDV (RX_CTL) input hold time | $t_{MRGMIIhi}$ | 2.9 | — | ns | |
| Ethernet (MII) | ETH2_REFCLK cycle time | $t_{MMIIck}$ | 40 | — | ns | Figure 2.85 |
| | ETH2_REFCLK frequency Typ. 25 MHz | — | 25 − 50 ppm | 25 + 50 ppm | MHz | |
| | ETH2_TXD0 to ETH2_TXD3, ETH2_TXEN, ETH2_TXER output delay time | $t_{MMIId}$ | 11 | 25 | ns | |
| | ETH2_RXD0 to ETH2_RXD3, ETH2_RXDV, ETH2_RXER setup time | $t_{MMIIs}$ | 10 | — | ns | |
| | ETH2_RXD0 to ETH2_RXD3, ETH2_RXDV, ETH2_RXER hold time | $t_{MMIIh}$ | 0 | — | ns | |



Downloaded from Arrow.com.

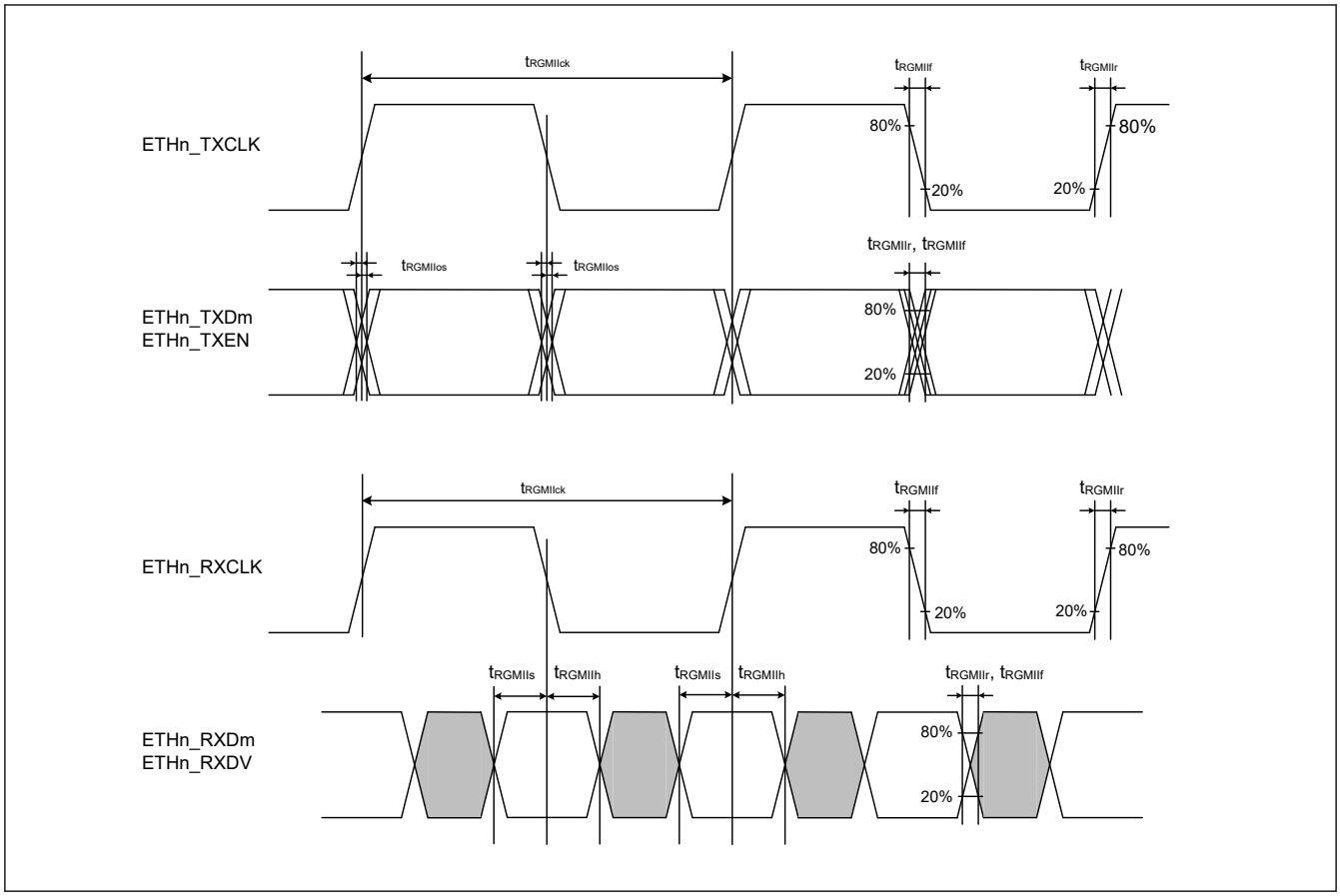


**Figure 2.81 RGMII transmission and reception timing (n = 0 to 2, m = 0 to 3)**

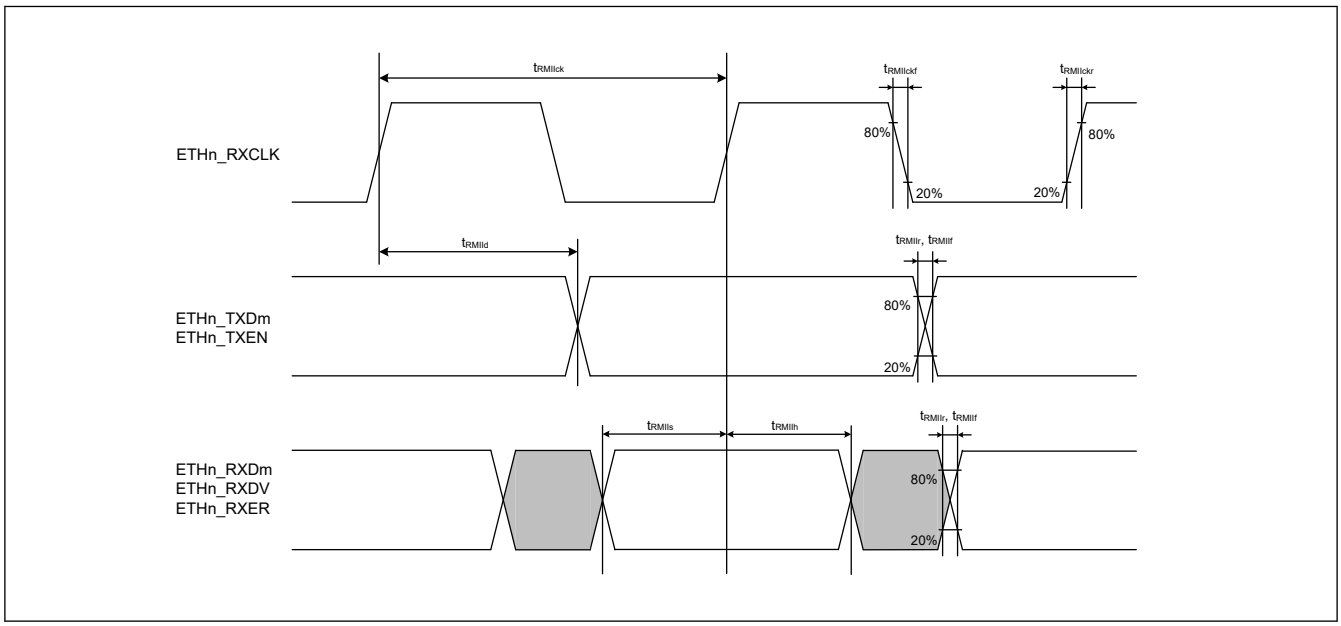


**Figure 2.82 RMII transmission and reception timing (n = 0 to 2, m = 0 to 1)**



Downloaded from Arrow.com.

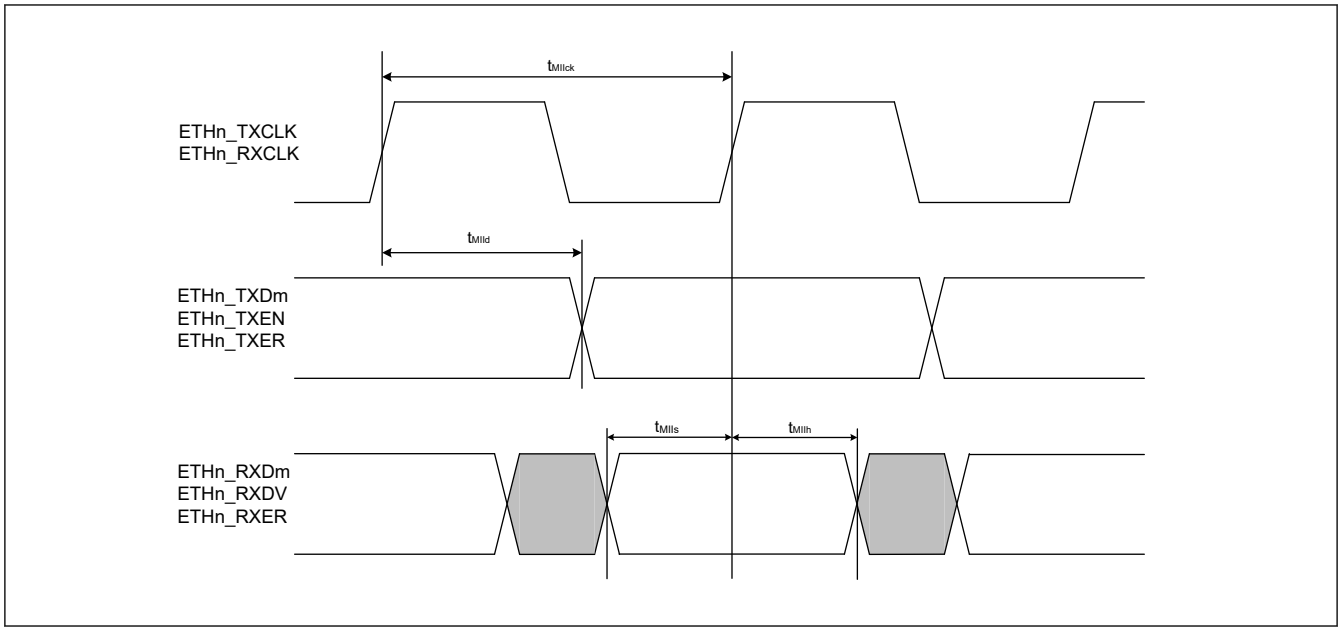


**Figure 2.83 MII transmission and reception timing (n = 0 to 2, m = 0 to 3)**

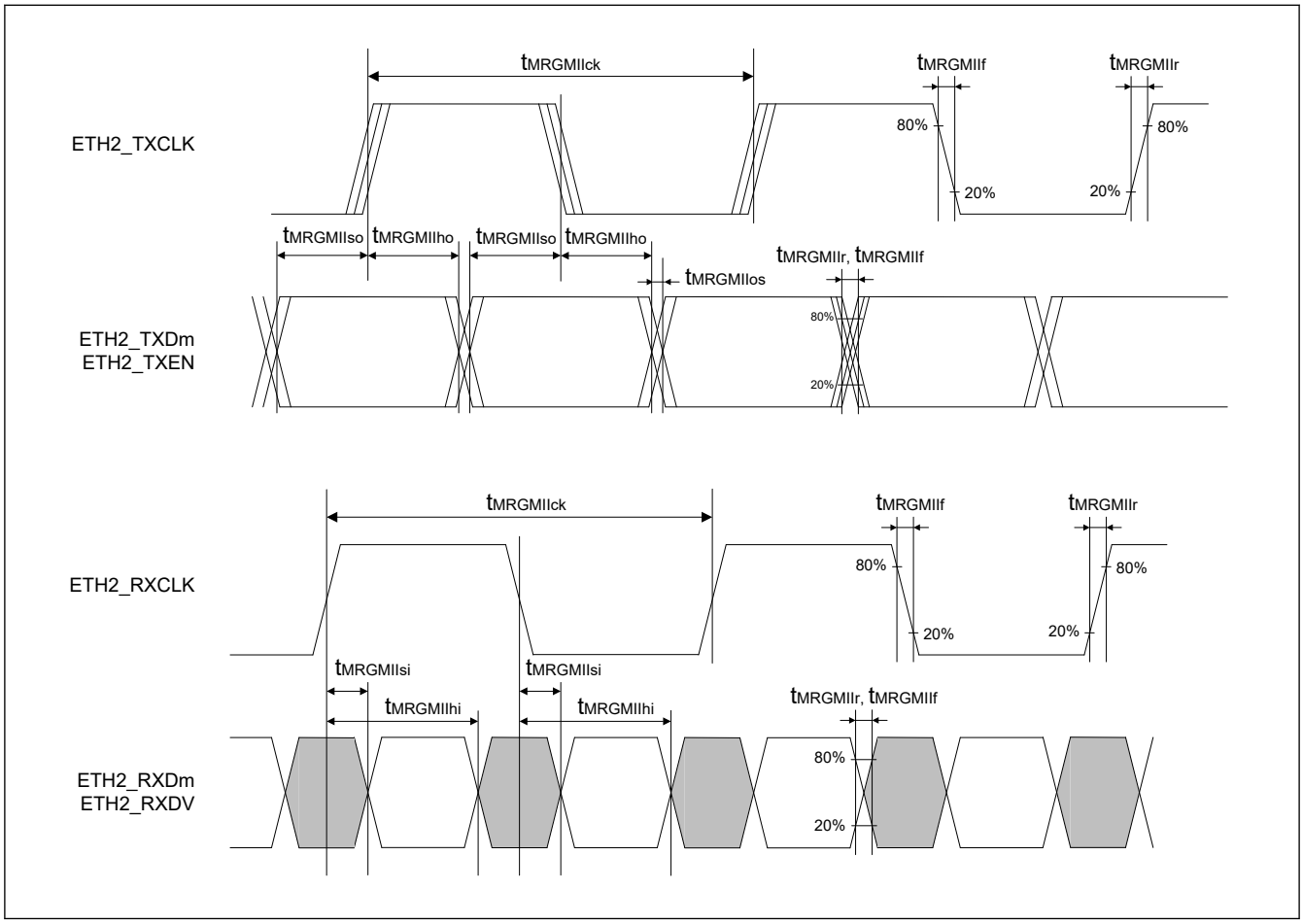


**Figure 2.84 RGMII transmission and reception timing (MAC to MAC connection mode) (m = 0 to 3)**



Downloaded from Arrow.com.

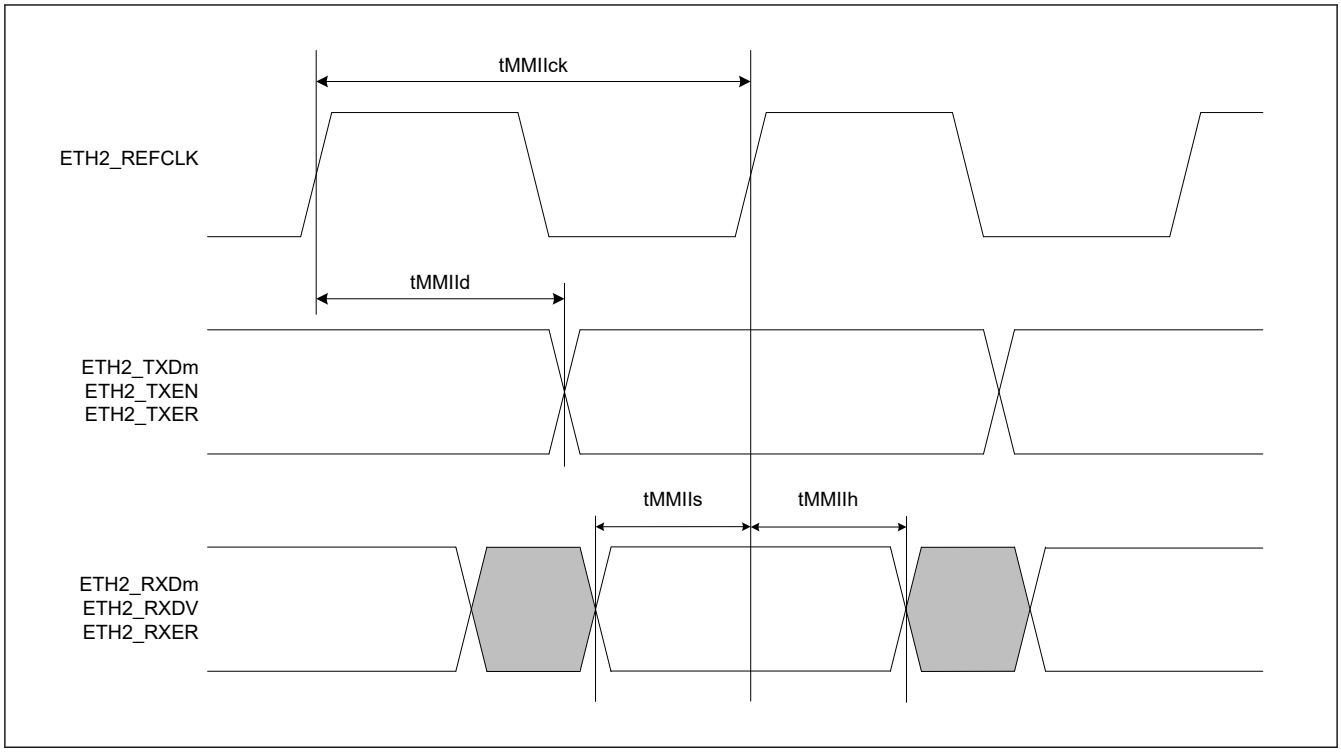


**Figure 2.85 MII transmission and reception timing (MAC to MAC connection mode) (m = 0 to 3)**

### 2.5.5.15 Serial Management Interface Timing

Conditions:

$V_{OH}$ = VCC18 × 0.5, $V_{OL}$ = VCC18 × 0.5, C = 30 pF (1.8 V)

$V_{OH}$ = VCC33 × 0.5, $V_{OL}$ = VCC33 × 0.5, C = 30 pF (3.3 V)

**Table 2.40 Serial management interface timing**

| Parameter | | | Symbol | Min. | Max. | Unit | Reference figure |
|---|---|---|---|---|---|---|---|
| MDIO | MDC output cycle time | GMAC_MDC, ETHSW_MDC | $T_{MDCck}$ | 80 | — | ns | Figure 2.86 |
| | | ESC_MDC | | 400 | — | ns | |
| | MDIO output delay time (for MDC fall)*1 | | $T_{MDIOd}$ | — | 20 | ns | |
| | MDIO input setup time (for MDC rise) | GMAC_MDC, ETHSW_MDC | $T_{MDIOs}$ | 20 | — | ns | |
| | | ESC_MDC | | 70 | — | ns | |
| | MDIO input hold time (for MDC rise) | | $T_{MDIOh}$ | 0 | — | ns | |

Note 1. The output timing from ETHSW is based on the rising edge of MDC, and the output delay can be set in the register.



Downloaded from Arrow.com.

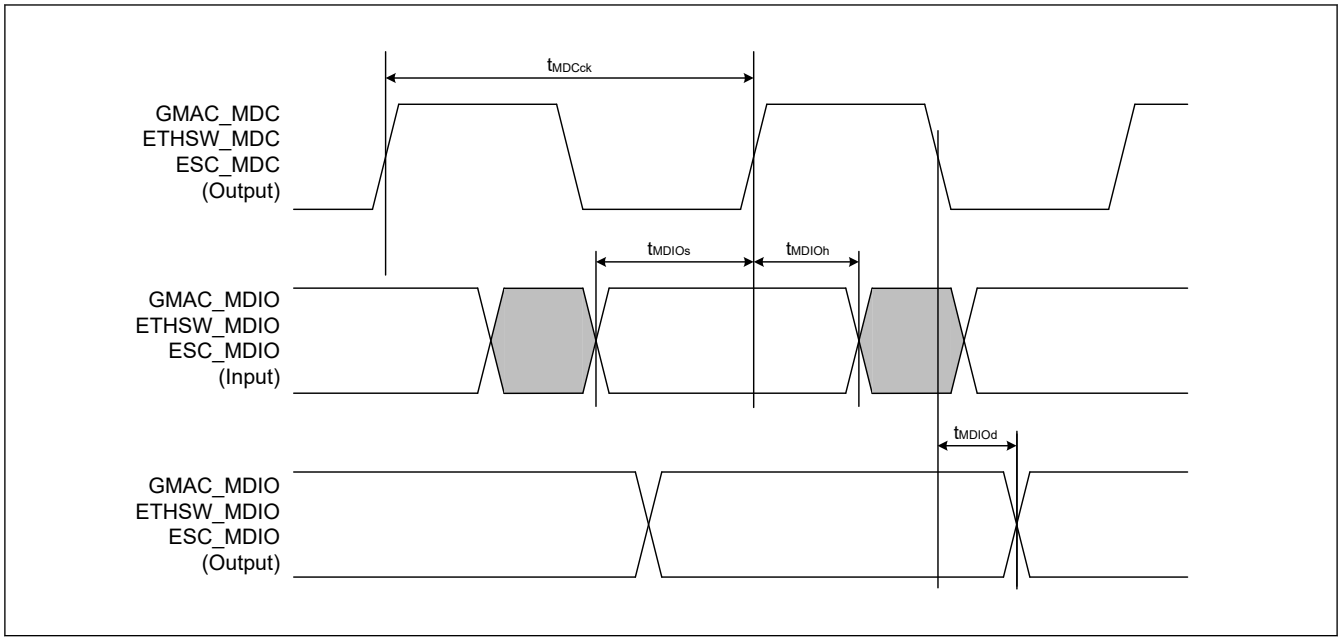


**Figure 2.86 Serial management interface timing**

### 2.5.5.16 SHOSTIF Timing

Conditions:

$V_{OH}$ = VCC18 × 0.5, $V_{OL}$ = VCC18 × 0.5, C = 30 pF (1.8 V)

$V_{OH}$ = VCC33 × 0.5, $V_{OL}$ = VCC33 × 0.5, C = 30 pF (3.3 V)

**Table 2.41 SHOSTIF timing**

| Parameter | | Symbol | Min. | Max. | Unit | Reference figure |
|---|---|---|---|---|---|---|
| SHOSTIF | Clock cycle time | $t_{SHck}$ | 25 | — | ns | Figure 2.87 |
| | Clock high time | $t_{CH}$ | 0.45 | 0.55 | $t_{SHck}$ | |
| | Clock low time | $t_{CL}$ | 0.45 | 0.55 | $t_{SHck}$ | |
| | Clock rise slew rate | $t_{CRT}$ | 0.1 | — | V/ns | |
| | Clock fall slew rate | $t_{CFT}$ | 0.1 | — | V/ns | |
| | CS# high time | $t_{CS}$ | 2 | — | $t_{SHck}$ | Figure 2.88, Figure 2.89 |
| | CS# active setup time | $t_{CSS}$ | 15 | — | ns | |
| | CS# active hold time | $t_{CSH}$ | 15 | — | ns | |
| | Data input setup time | $t_{SU}$ | 3 | — | ns | |
| | Data input hold time | $t_{HD}$ | 10.5 | — | ns | |
| | Clock low to output valid | $t_{V}$ | — | 15.5 | ns | |
| | Data output hold time | $t_{HO}$ | 6 | — | ns | |
| | Data output disable time | $t_{DIS}$ | — | 18 | ns | |



Downloaded from Arrow.com.

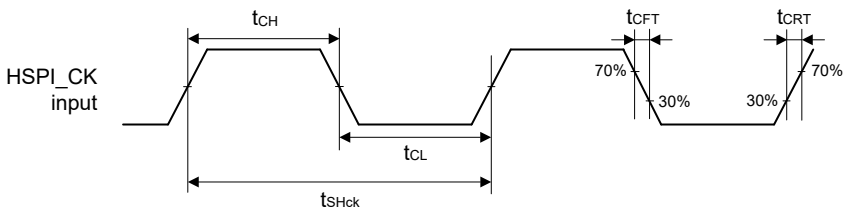


**Figure 2.87 SHOSTIF clock timing**

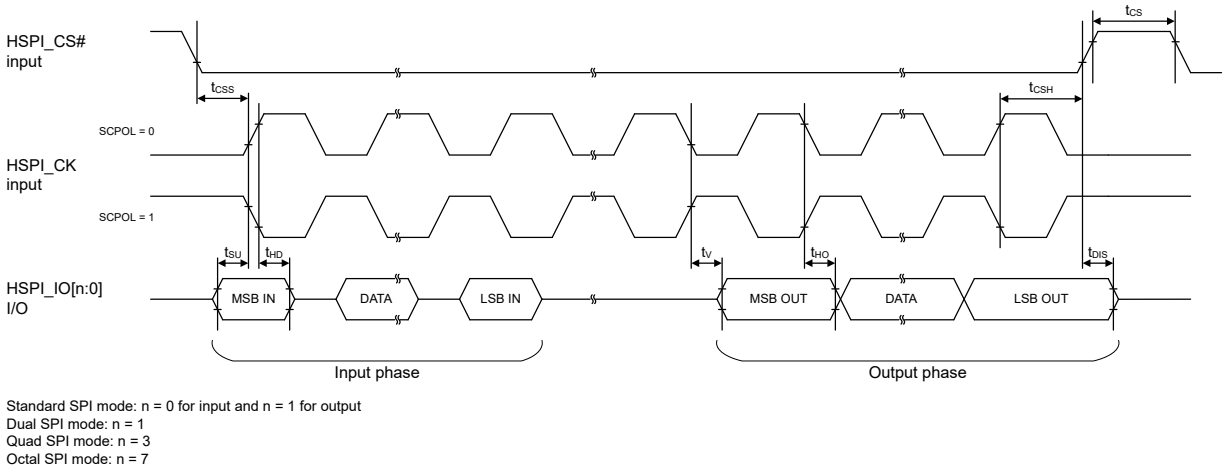


**Figure 2.88 SHOSTIF timing (SCPH = 0)**

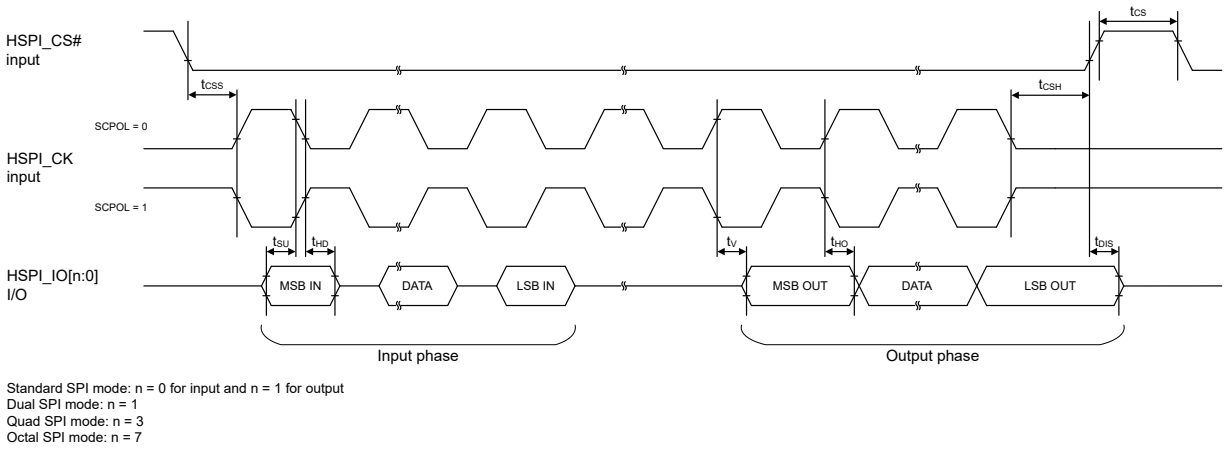


**Figure 2.89 SHOSTIF timing (SCPH = 1)**

### 2.5.5.17 PHOSTIF Timing

Conditions:

$V_{OH}$ = VCC33 × 0.5, $V_{OL}$ = VCC33 × 0.5, C = 30 pF



Downloaded from Arrow.com.

## (1) Synchronous SRAM Interface Mode

**Table 2.42 PHOSTIF timing (Synchronous SRAM interface mode)**

| No. | Parameter | Symbol | Min. | Max. | Unit | Reference figure |
|---|---|---|---|---|---|---|
| 1 | HCKIO input cycle | $t_{HCKIO}$ | 20.0 | — | ns | Figure 2.90 to Figure 2.94 |
| 2 | HCKIO High-level width | $t_{HBHIGH}$ | 0.5 × $t_{HCKIO}$ - 2.1 | 0.5 × $t_{HCKIO}$ + 2.1 | ns | |
| 3 | HCKIO Low-level width | $t_{HBLOW}$ | 0.5 × $t_{HCKIO}$ - 2.1 | 0.5 × $t_{HCKIO}$ + 2.1 | ns | |
| 4 | Address and HCS0#/HCS1# input setup time (to HCKIO ↑) | $t_{SKHA}$ | 4.0 | — | ns | |
| 5 | Address and HCS0#/HCS1# input hold time (to HCKIO ↑) | $t_{HKHA}$ | 1.0 | — | ns | |
| 6 | HWR0#/HWR1# input setup time (to HCKIO ↑) | $t_{SKHWR}$ | 4.0 | — | ns | |
| 7 | HWR0#/HWR1# input hold time (to HCKIO ↑) | $t_{HKHWR}$ | 1.0 | — | ns | |
| 8 | HWRSTB# input setup time (to HCKIO ↑) | $t_{SKHWRSTB}$ | 4.0 | — | ns | |
| 9 | HWRSTB# input hold time (to HCKIO ↑) | $t_{HKHWRSTB}$ | 1.0 | — | ns | |
| 10 | HRD# input setup time (to HCKIO ↑) | $t_{SKHRD}$ | 4.0 | — | ns | |
| 11 | HRD# input hold time (to HCKIO ↑) | $t_{HKHRD}$ | 1.0 | — | ns | |
| 12 | Data input setup time (to HCKIO ↑) | $t_{SKIHD}$ | 4.0 | — | ns | |
| 13 | Data input hold time (to HCKIO ↑) | $t_{HKIHD}$ | 1.0 | — | ns | |
| 14 | Data and HWAIT# output delay time (to HRD# ↓) | $t_{DKHDHR}$ | 1.0 | — | ns | |
| 15 | Data and HWAIT# output hold time (to HRD# ↑) | $t_{HKOHD}$ | — | 11.0 | ns | |
| 16 | Data and HWAIT# output delay time (to HCS0#/HCS1# ↓) | $t_{DKHD}$ | 1.0 | — | ns | |
| 17 | Data and HWAIT# output hold time (to HCS0#/HCS1# ↑) | $t_{HKWTCS}$ | — | 11.0 | ns | |
| 18 | HWAIT# output delay time (to HWRSTB#, HWR0#/HWR1# ↓) | $t_{DKHWT}$ | 1.0 | — | ns | |
| 19 | HWAIT# output hold time (to HWRSTB#, HWR0#/HWR1# ↑) | $t_{HKWTWR}$ | — | 11.0 | ns | |
| 20 | HWAIT# output delay time (to HCKIO ↑) | $t_{DKHWTV}$ | 2.0 | 11.0 | ns | |
| 21 | Data output delay time (to HCKIO ↑) | $t_{DKHDV}$ | 2.0 | 11.0 | ns | |
| 22 | Data and HWAIT# valid data output hold time (to HRD# ↑) | $t_{HKHWTHR}$ | 1.0 | — | ns | |
| 23 | HWR0#/HWR1#, HWRSTB# recovery time (High-level width) | $t_{WHWR}$ | 40.0 | — | ns | |
| 24 | HRD# recovery time (High-level width) | $t_{WHRD}$ | 40.0 | — | ns | |



Downloaded from Arrow.com.

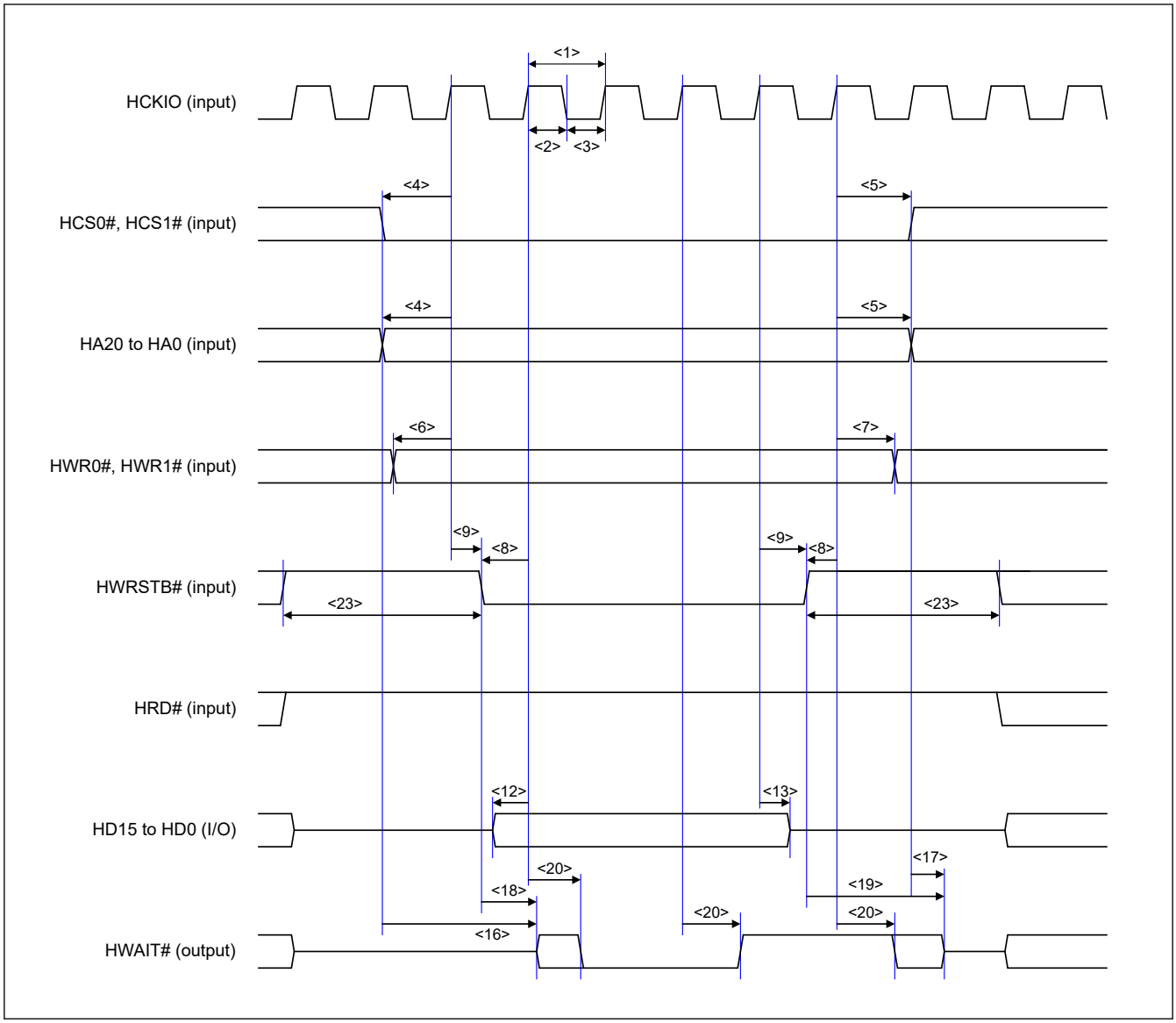


**Figure 2.90 PHOSTIF write timing (Synchronous SRAM interface mode)**



Downloaded from Arrow.com.

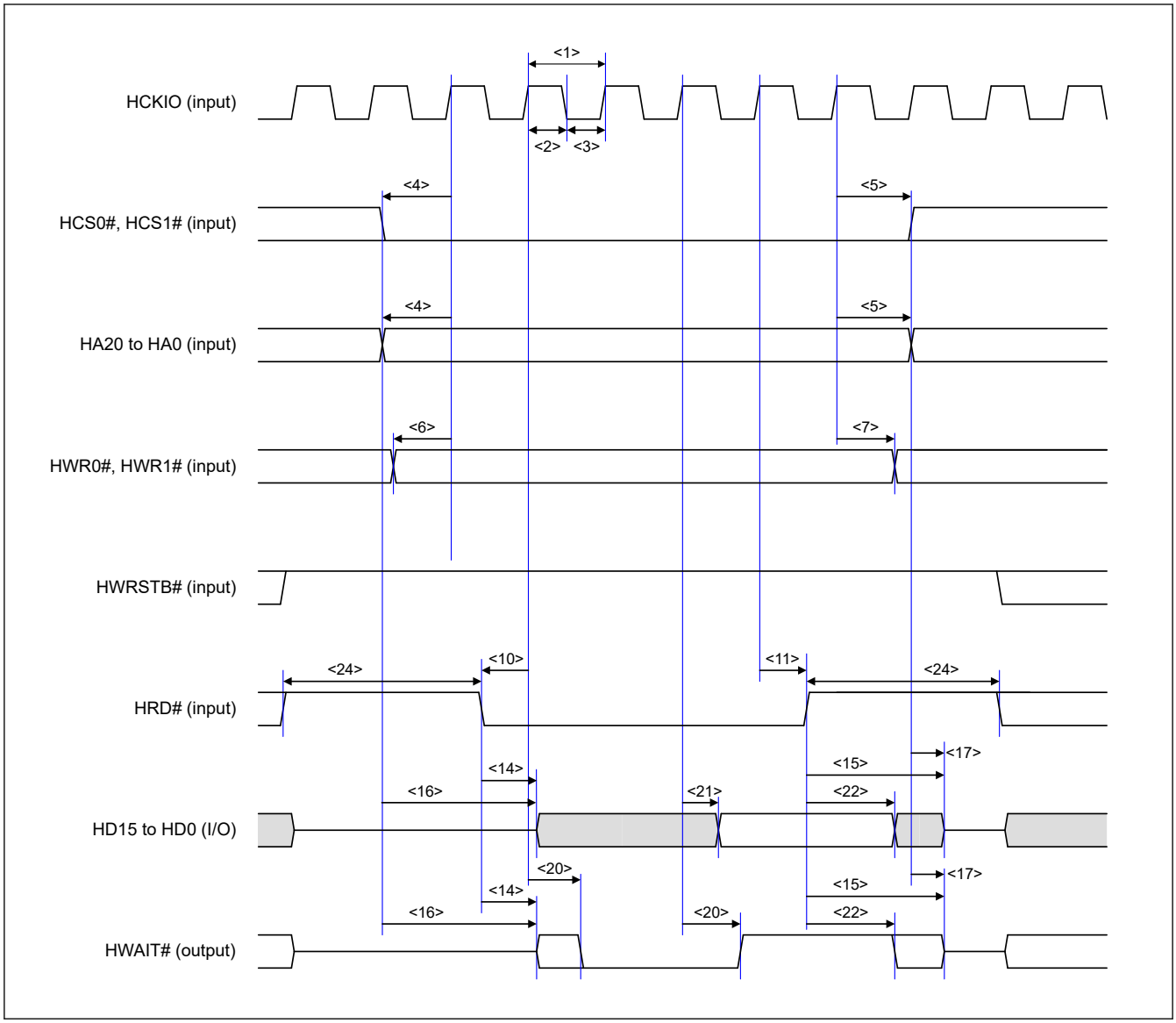


**Figure 2.91 PHOSTIF read timing (Synchronous SRAM interface mode)**



Downloaded from Arrow.com.

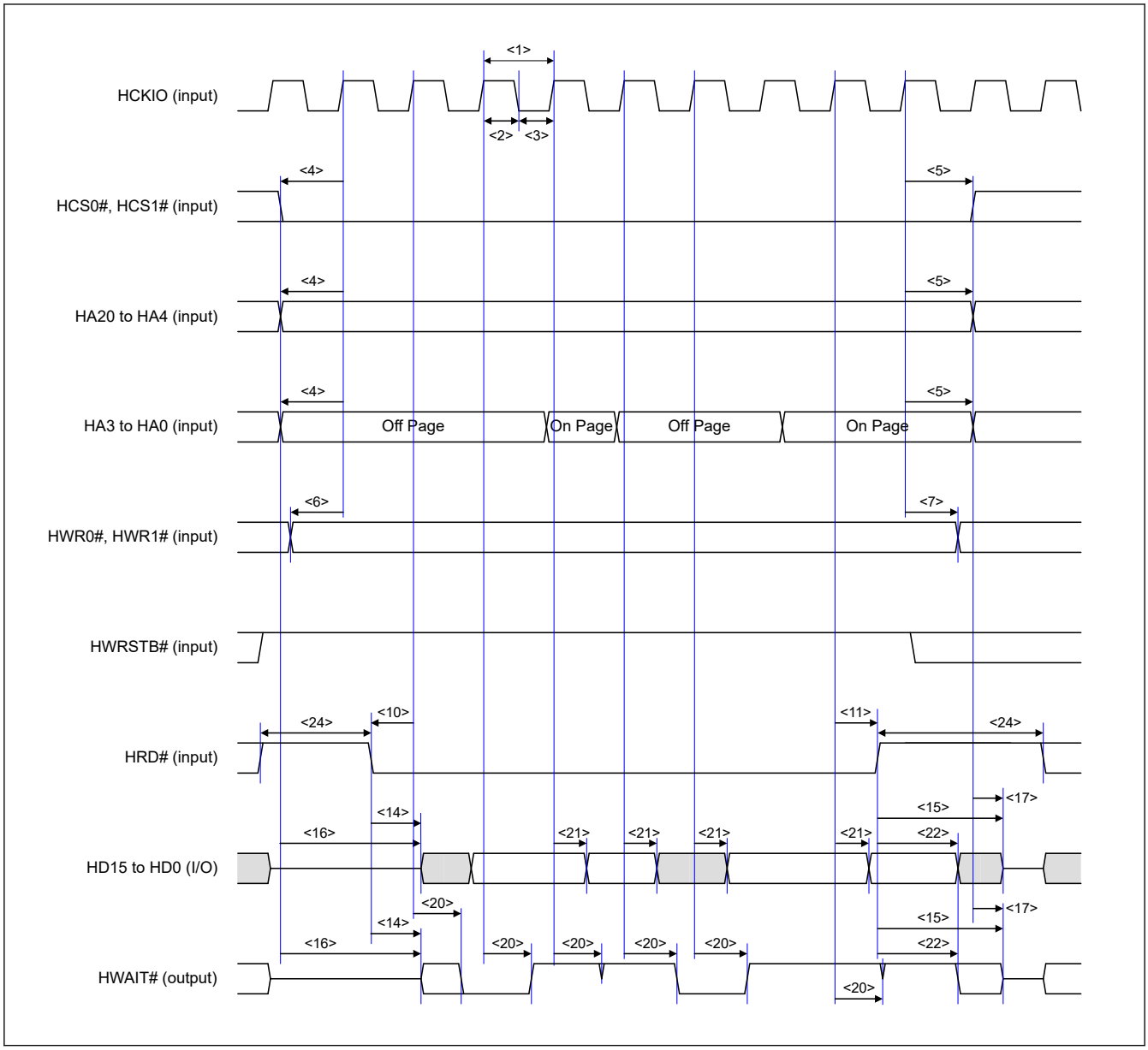


**Figure 2.92 PHOSTIF page read timing (Synchronous SRAM interface mode)**



Downloaded from Arrow.com.

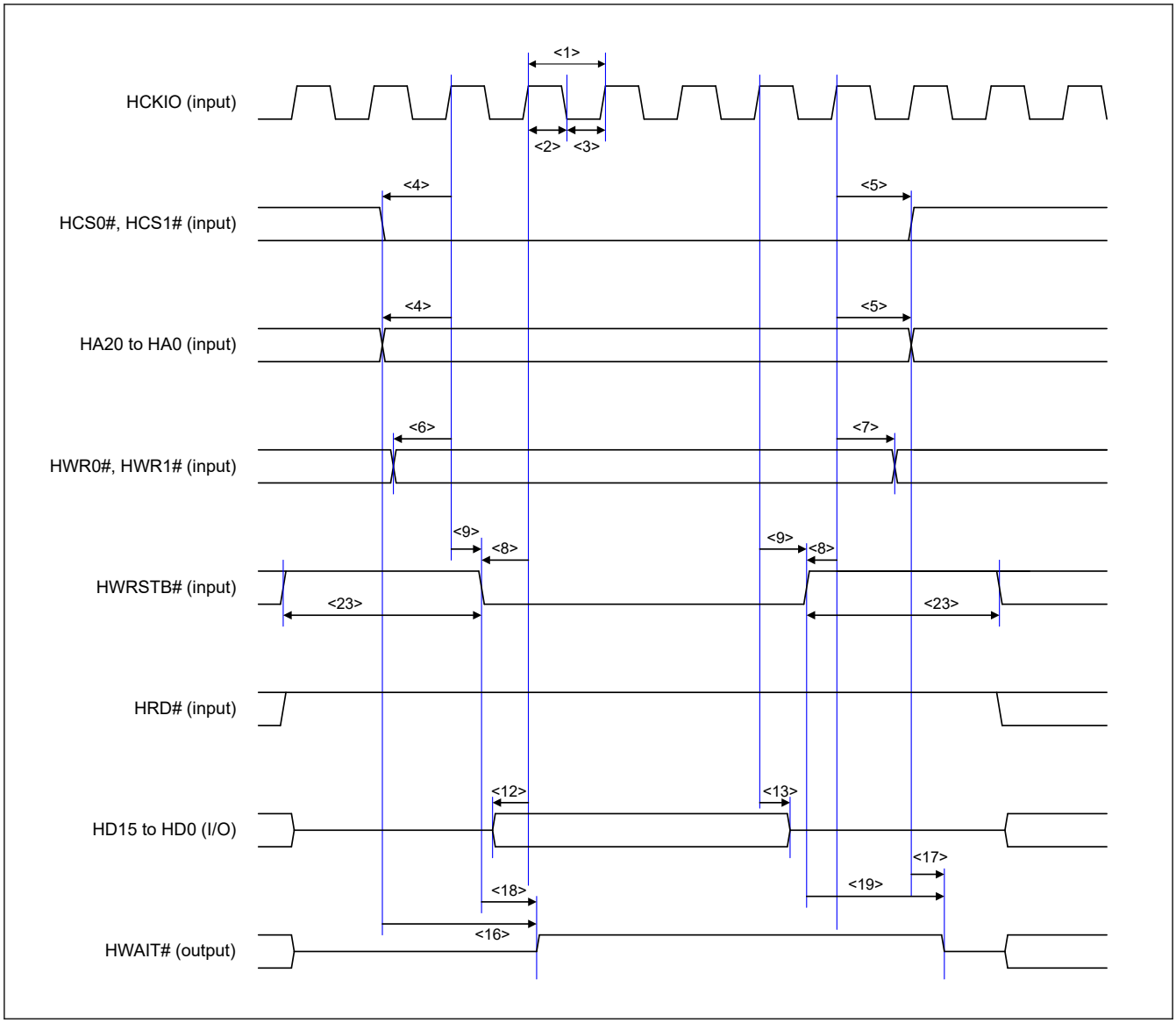


**Figure 2.93 PHOSTIF write timing (PHOSTIF register write) (Synchronous SRAM interface mode)**



Downloaded from Arrow.com.

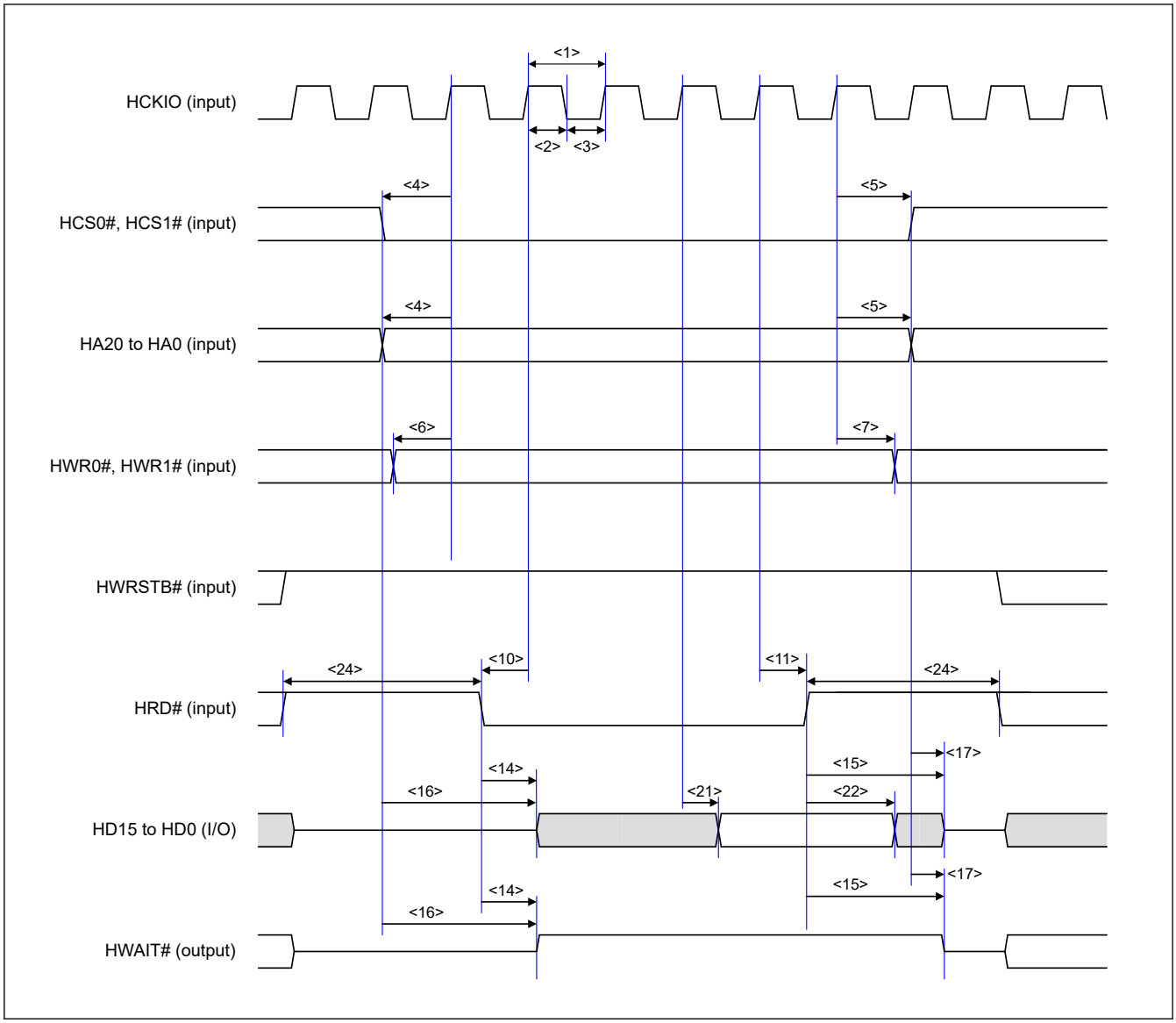


**Figure 2.94 PHOSTIF read timing (PHOSTIF register read) (Synchronous SRAM interface mode)**



Downloaded from Arrow.com.

## (2) Asynchronous SRAM Interface Mode

**Table 2.43 PHOSTIF timing (Asynchronous SRAM interface mode)**

| No. | Parameter | Symbol | Min. | Max. | Unit | Reference figure |
|---|---|---|---|---|---|---|
| 1 | Address, HCS0#/HCS1# input setup time (to HWRSTB#, HWR0#/HWR1# ↓) | $t_{ADDWRS}$ | 0 | — | ns | Figure 2.95 to Figure 2.98 |
| 2 | HWR0#/HWR1# and HWRSTB# recovery time (High-level width) | $t_{WRW}$ | 20.0 | — | ns | |
| 3 | Data input setup time (to HWRSTB#, HWR0#/HWR1# ↓) | $t_{WRS}$ | 0 | — | ns | |
| 4 | Data input hold time (to HWRSTB#, HWR0#/HWR1# ↑) | $t_{WRH}$ | 0 | — | ns | |
| 5 | HWAIT# output delay time (to HCS0#/HCS1# ↓) | $t_{CLZ}$ | 1.0 | — | ns | |
| 6 | HWAIT# output delay time (to HWRSTB#, HWR0#/HWR1# ↓) | $t_{WAITD}$ | 1.0 | — | ns | |
| 7 | HWAIT# valid data output delay time (for HWRSTB#, HWR0#/HWR1# ↓) | $t_{WRWAITF}$ | — | 39.2 | ns | |
| 8 | HWAIT# valid data output hold time (for HWRSTB#, HWR0#/HWR1# ↑) | $t_{WAITVH}$ | 0 | — | ns | |
| 9 | HWAIT# output hold time (to HWR0#/HWR1#, HWRSTB# ↑) | $t_{WAITH}$ | — | 11.0 | ns | |
| 10 | HWAIT# output hold time (to HCS0#/HCS1# ↑) | $t_{CHZ}$ | — | 11.0 | ns | |
| 11 | Address and HCS0#/HCS1# input setup time (to HRD# ↓) | $t_{ADDRDS}$ | 0 | — | ns | |
| 12 | Address input hold time in page access (to HRD# ↑) | $t_{ADDRDH}$ | 0 | — | ns | |
| 13 | HRD# recovery time (High-level width) | $t_{RDW}$ | 20.0 | — | ns | |
| 14 | Data and HWAIT# output delay time (to HRD# ↓) | $t_{RDLZ}$ | 1.0 | — | ns | |
| 15 | HWAIT# valid data output delay time (to HRD# ↓) | $t_{RDWAITF}$ | — | 39.2 | ns | |
| 16 | Data fixing time (to HWAIT# ↑) | $t_{WAITR}$ | 0 | — | ns | |
| 17 | Data and HWAIT# valid data output hold time (to HRD# ↑) | $t_{DATAOH}$ | 1.0 | — | ns | |
| 18 | Data and HWAIT# output hold time (to HRD# ↑) | $t_{RDHZ}$ | — | 11.0 | ns | |
| 19 | Data and HWAIT# output delay time in on-page access (to addresses) | $t_{PAGEOND}$ | 18.0 | 29.2 | ns | |
| 20 | Data and HWAIT# output delay time in off-page access (to addresses) (when not crossing a 16-byte boundary) | $t_{PAGEOFD}$ | 18.0 | 29.2 | ns | |
| 20 | Data and HWAIT# output delay time in off-page access (to addresses) (when crossing a 16-byte boundary) | $t_{PAGEOFD}$ | 18.0 | 29.2 | ns | |
| 21 | HWAIT# valid data output delay time (to HCS0#/HCS1# ↓) | $t_{WAITVD}$ | — | 39.2 | ns | |
| 22 | Data fixing time (to addresses) | $t_{ADDFIX}$ | 18.0 | — | ns | |



Downloaded from Arrow.com.

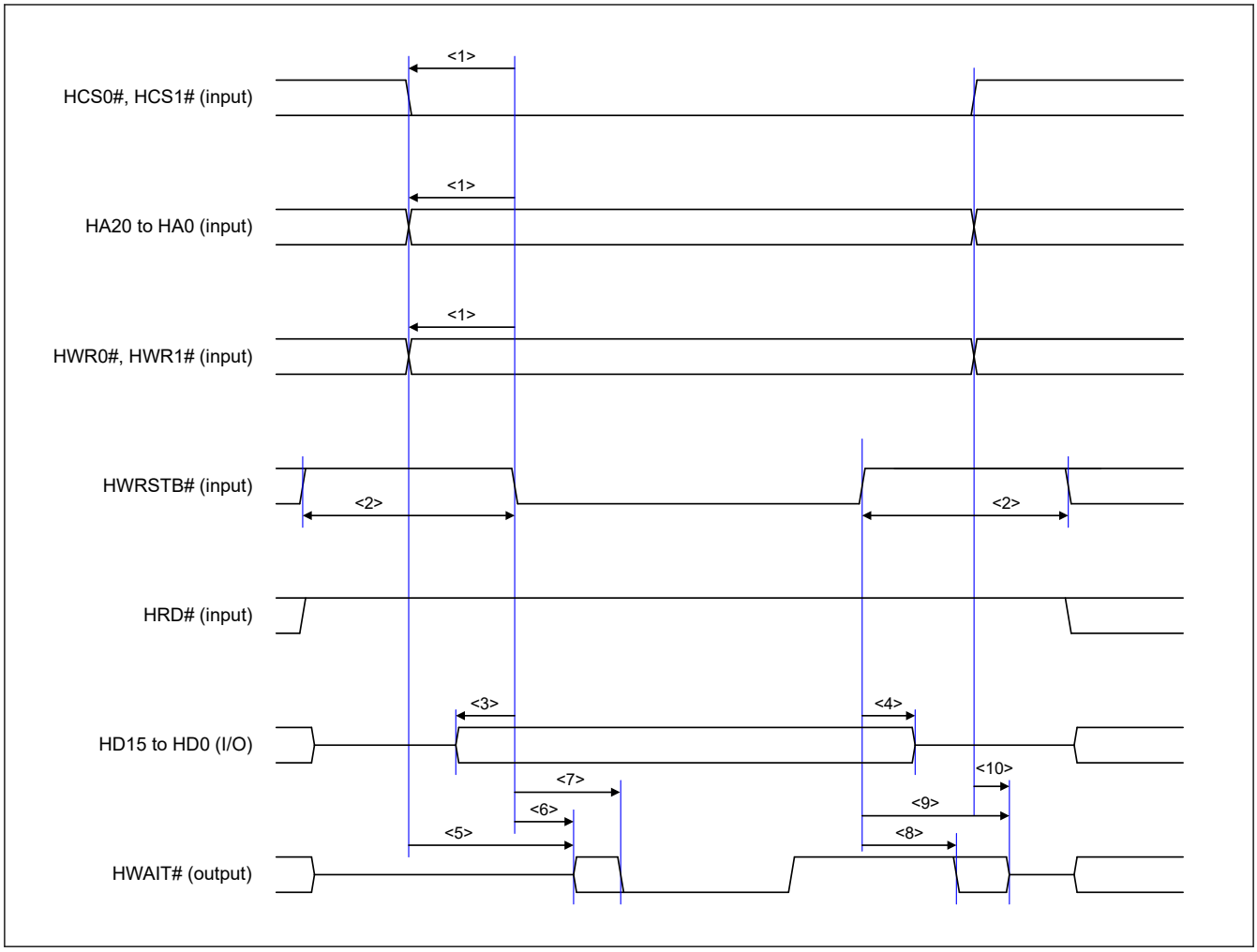


**Figure 2.95 PHOSTIF write timing (Asynchronous SRAM interface mode)**



Downloaded from Arrow.com.

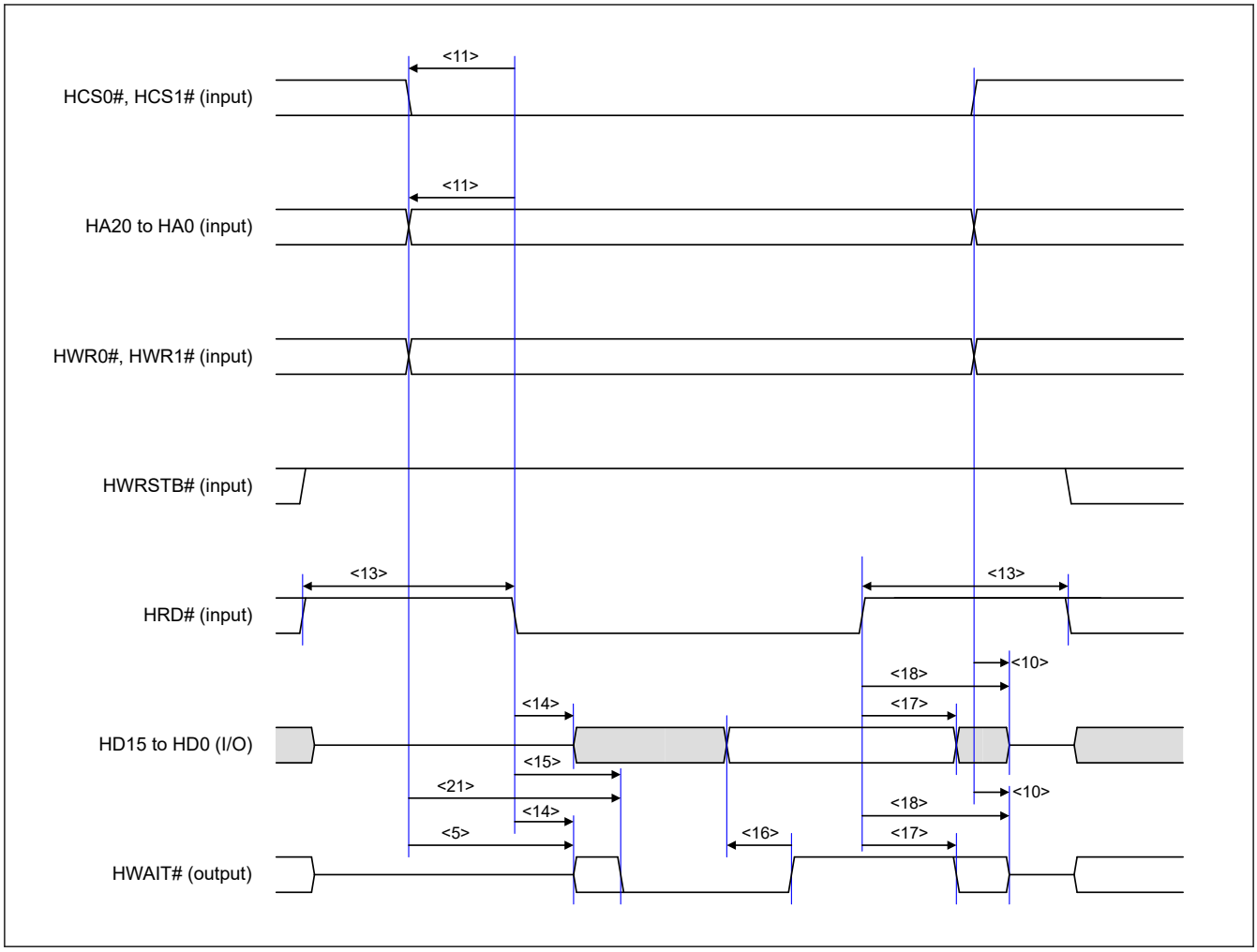


**Figure 2.96 PHOSTIF read timing (Asynchronous SRAM interface mode)**



Downloaded from Arrow.com.

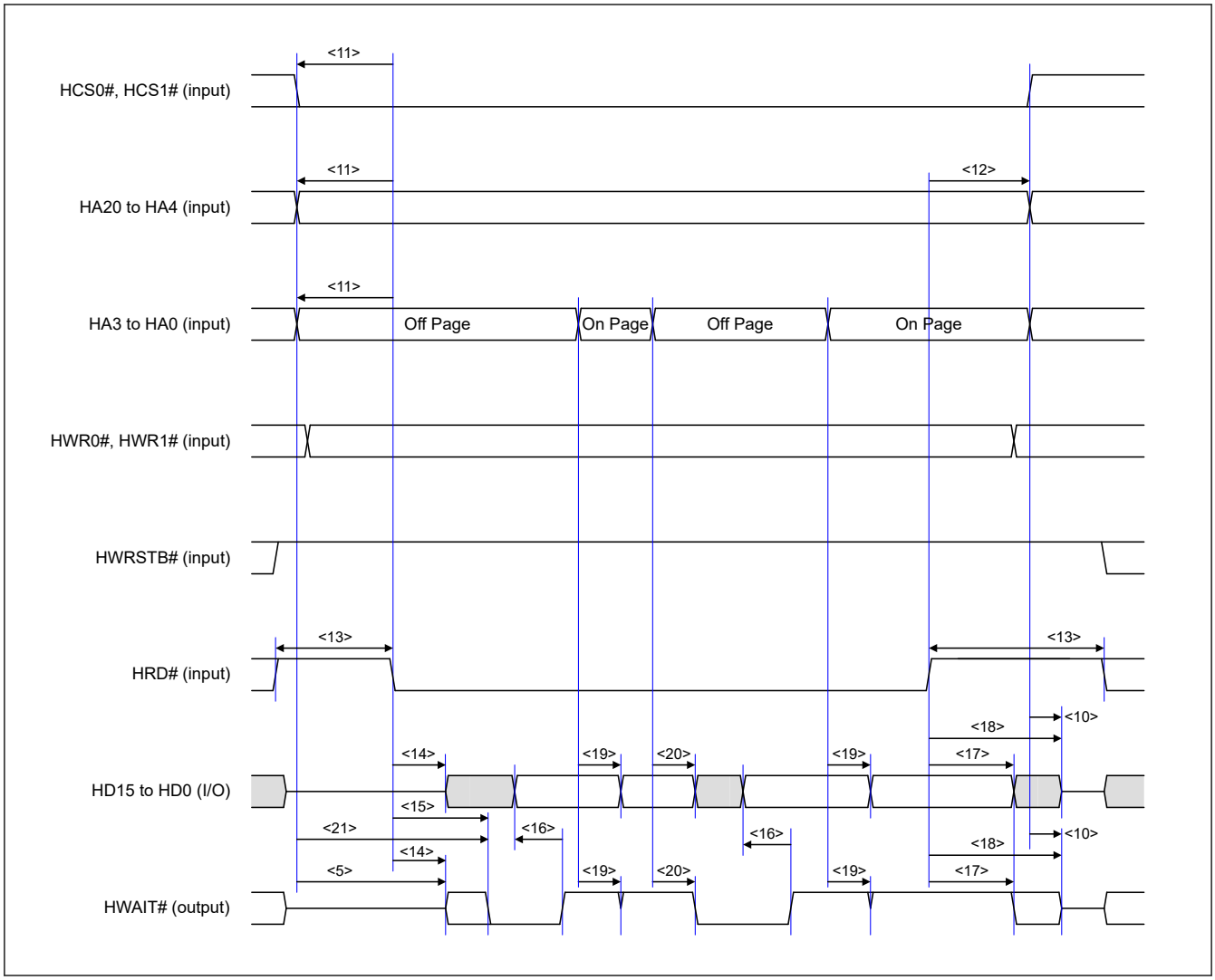


**Figure 2.97 PHOSTIF page read timing (Asynchronous SRAM interface mode)**



Downloaded from Arrow.com.

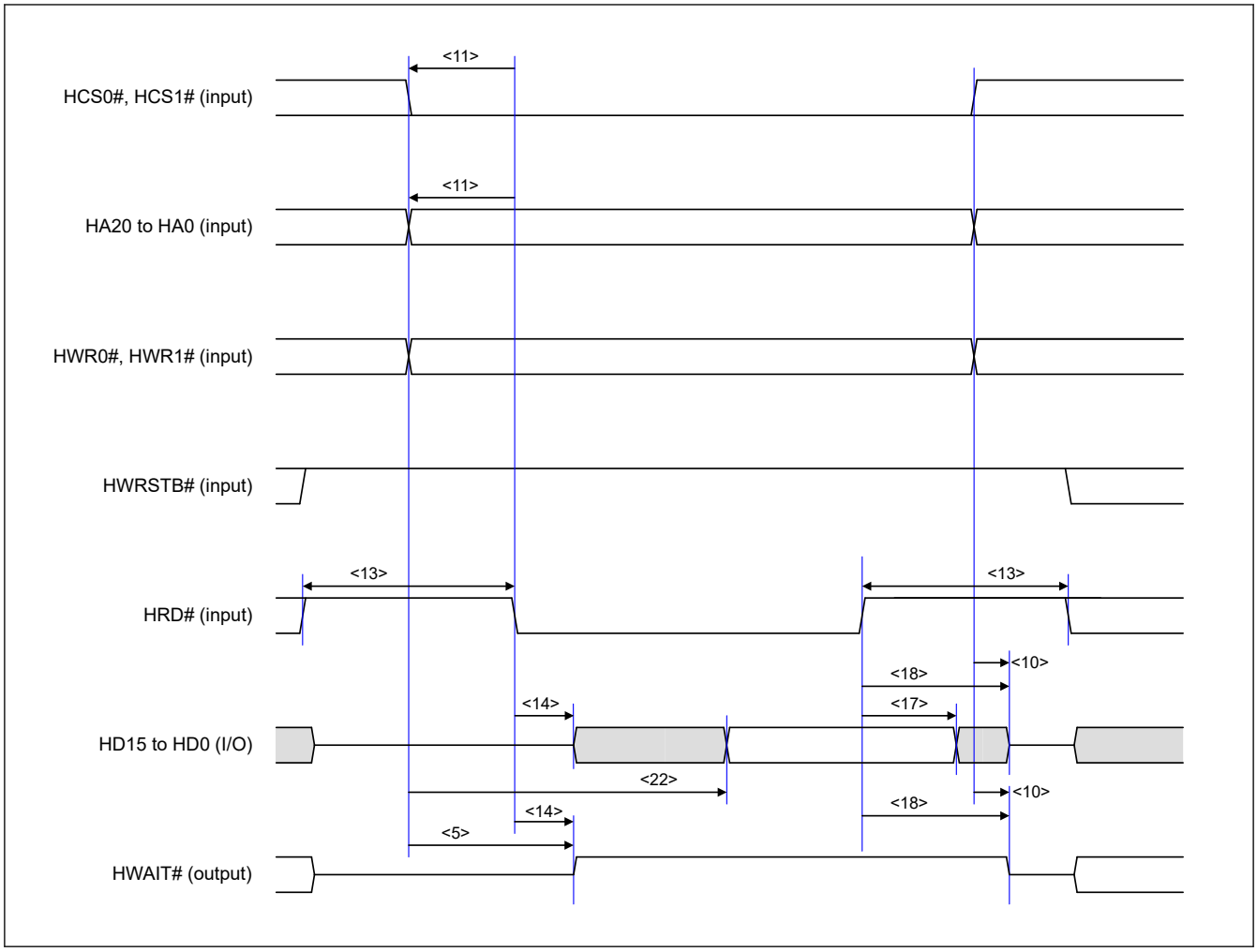


**Figure 2.98 PHOSTIF register read timing (Asynchronous SRAM interface mode)**



Downloaded from Arrow.com.

## (3) Synchronous Burst SRAM Type Transfer Mode

**Table 2.44 PHOSTIF timing (Synchronous Burst SRAM Type transfer mode)**

| No. | Parameter | Symbol | Min. | Max. | Unit | Reference figure |
|---|---|---|---|---|---|---|
| 1 | HCKIO input cycle | $t_{HCKIO}$ | 20.0 | — | ns | Figure 2.99 to Figure 2.102 |
| 2 | HCKIO High-level width | $t_{HBHIGH}$ | 0.5 × $t_{HCKIO}$ - 2.1 | 0.5 × $t_{HCKIO}$ + 2.1 | ns | |
| 3 | HCKIO Low-level width | $t_{HBLOW}$ | 0.5 × $t_{HCKIO}$ - 2.1 | 0.5 × $t_{HCKIO}$ + 2.1 | ns | |
| 4 | Address and HCS0#/HCS1# input setup time (to HCKIO ↑) | $t_{SKPHA}$ | 4.0 | — | ns | |
| 5 | Address and HCS0#/HCS1# input hold time (to HCKIO ↑) | $t_{HKPCS}$ | 1.0 | — | ns | |
| 6 | Address and HCS0#/HCS1# input setup time (to HCKIO ↓) | $t_{SKNHA}$ | 4.0 | — | ns | |
| 7 | Address and HCS0#/HCS1# input hold time (to HCKIO ↓) | $t_{HKNHA}$ | 1.0 | — | ns | |
| 8 | HWR0#/HWR1# input setup time (to HCKIO ↑) | $t_{SKPHWR}$ | 4.0 | — | ns | |
| 9 | HWR0#/HWR1# input hold time (to HCKIO ↑) | $t_{HKPHWR}$ | 1.0 | — | ns | |
| 10 | HWR0#/HWR1# input setup time (to HCKIO ↓) | $t_{SKNHWR}$ | 4.0 | — | ns | |
| 11 | HWR0#/HWR1# input hold time (to HCKIO ↓) | $t_{HKNHWR}$ | 1.0 | — | ns | |
| 12 | HBS#, HWRSTB# input setup time (to CKIO ↑) | $t_{SKPHBCY}$ | 4.0 | — | ns | |
| 13 | HBS#, HWRSTB# input hold time (to CKIO ↑) | $t_{HKPHBCY}$ | 1.0 | — | ns | |
| 14 | HBS#, HWRSTB# input setup time (to CKIO ↓) | $t_{SKNHBCY}$ | 4.0 | — | ns | |
| 15 | HBS#, HWRSTB# input hold time (to CKIO ↓) | $t_{HKNHBCY}$ | 1.0 | — | ns | |
| 16 | HRD# input setup time (to CKIO ↑) | $t_{SKPHRD}$ | 4.0 | — | ns | |
| 17 | HRD# input hold time (to CKIO ↑) | $t_{HKPHRD}$ | 1.0 | — | ns | |
| 18 | HRD# input setup time (to CKIO ↓) | $t_{SKNHRD}$ | 4.0 | — | ns | |
| 19 | HRD# input hold time (to CKIO ↓) | $t_{HKNHRD}$ | 1.0 | — | ns | |
| 20 | Data input setup time (to CKIO ↑) | $t_{SKPHD}$ | 4.0 | — | ns | |
| 21 | Data input hold time (to CKIO ↑) | $t_{HKPHD}$ | 1.0 | — | ns | |
| 22 | Data input setup time (to CKIO ↓) | $t_{SKNHD}$ | 4.0 | — | ns | |
| 23 | Data input hold time (to CKIO ↓) | $t_{HKNHD}$ | 1.0 | — | ns | |
| 24 | Data output delay time (to HRD# ↓) | $t_{DKNHRD}$ | 1.0 | — | ns | |
| 25 | Data output hold time (to HRD# ↑) | $t_{HKPHRD}$ | — | 11.0 | ns | |
| 26 | Data output delay time (to HCKIO ↑) | $t_{DKPHD}$ | 2.0 | 11.0 | ns | |
| 27 | Data output delay time (to HCKIO ↓) | $t_{DKNHD}$ | 2.0 | 11.0 | ns | |
| 28 | HWAIT# output delay time (to HCKIO ↑) | $t_{DKPHWT}$ | 2.0 | 11.0 | ns | |
| 29 | HWAIT# output delay time (to HCKIO ↓) | $t_{DKNHWT}$ | 2.0 | 11.0 | ns | |
| 30 | Data output hold time (to HCS0#/HCS1# ↑) | $t_{HKPHCS}$ | — | 11.0 | ns | |
| 31 | HWRSTB# recovery time (High-level width) | $t_{WHWR}$ | 40.0 | — | ns | |
| 32 | HRD# recovery time (High-level width) | $t_{WHRD}$ | 40.0 | — | ns | |



Downloaded from Arrow.com.

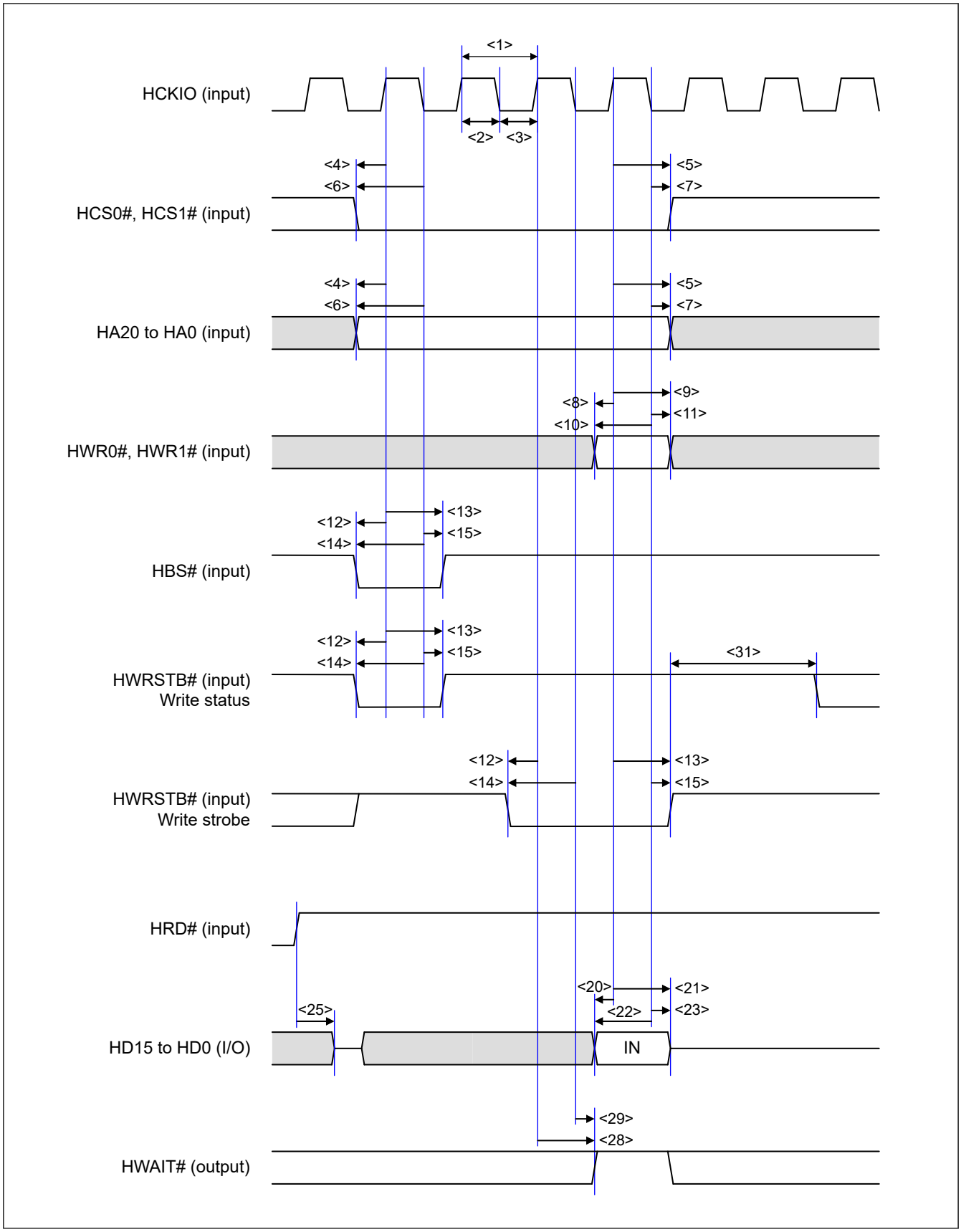


**Figure 2.99 PHOSTIF write timing (Synchronous Burst SRAM Type transfer mode, Address/Data separation)**



Downloaded from Arrow.com.

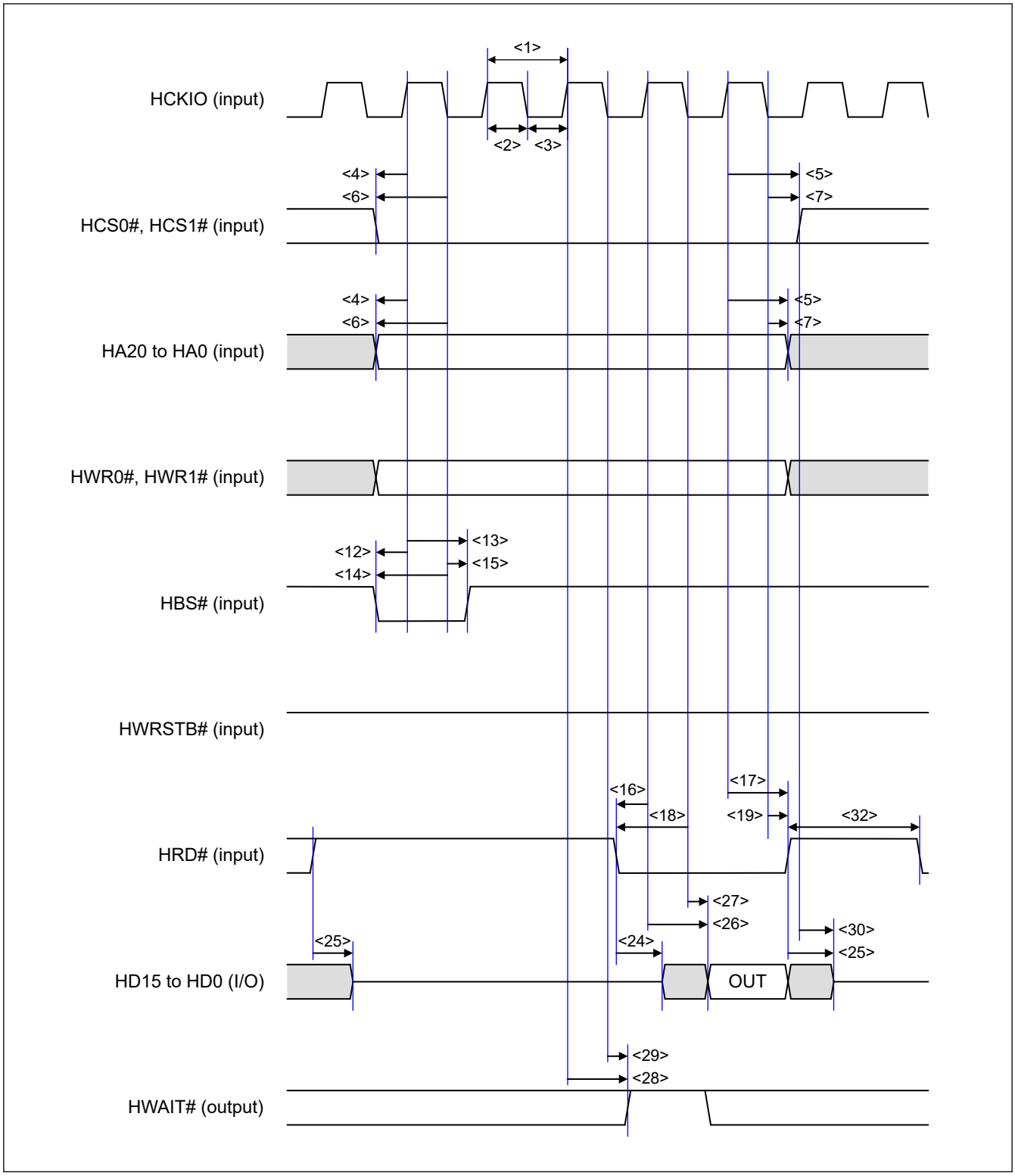


**Figure 2.100 PHOSTIF read timing (Synchronous Burst SRAM Type transfer mode, Address/Data separation)**



Downloaded from Arrow.com.

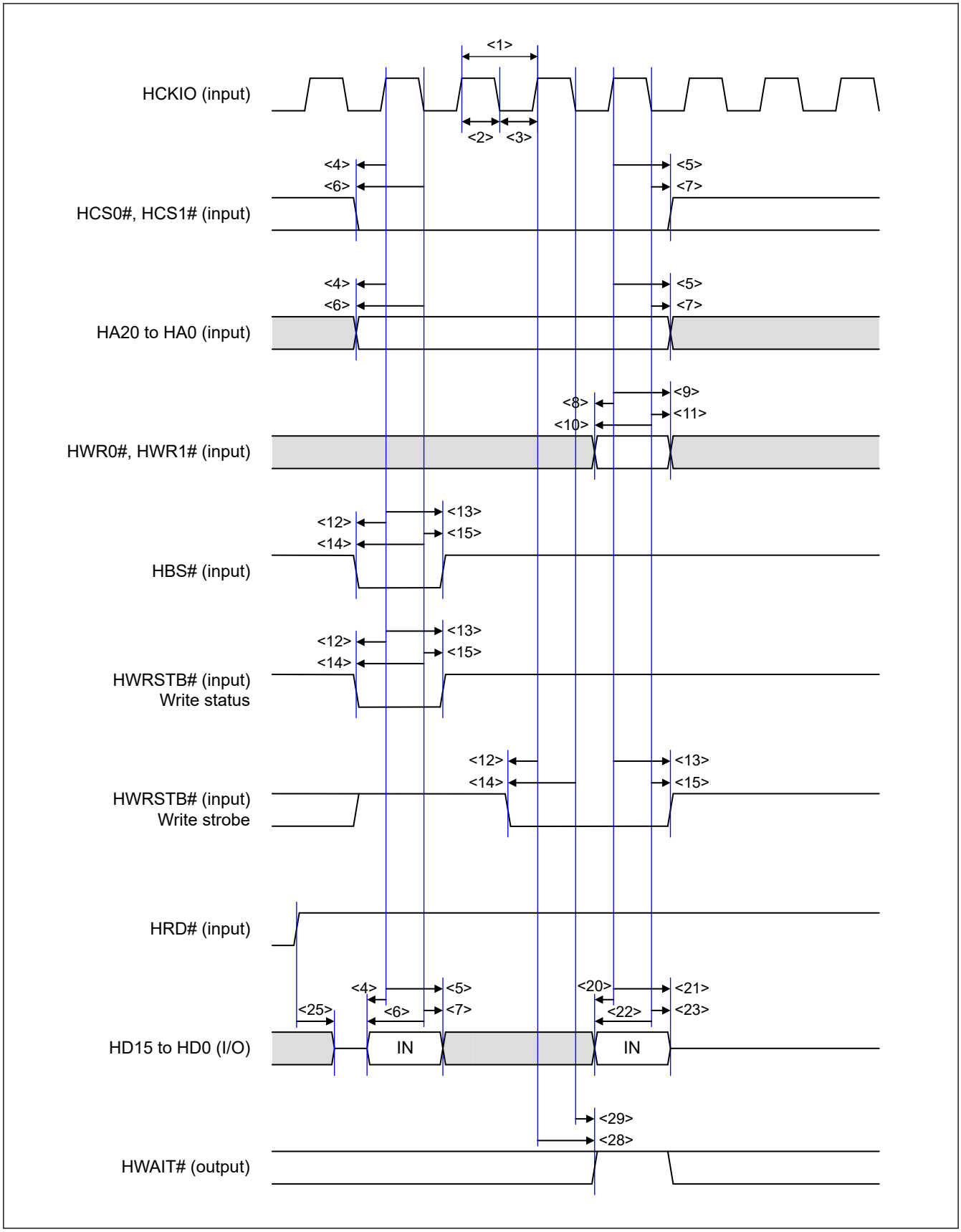


**Figure 2.101 PHOSTIF write timing (Synchronous Burst SRAM Type transfer mode, Address/Data multiplexing)**



Downloaded from Arrow.com.

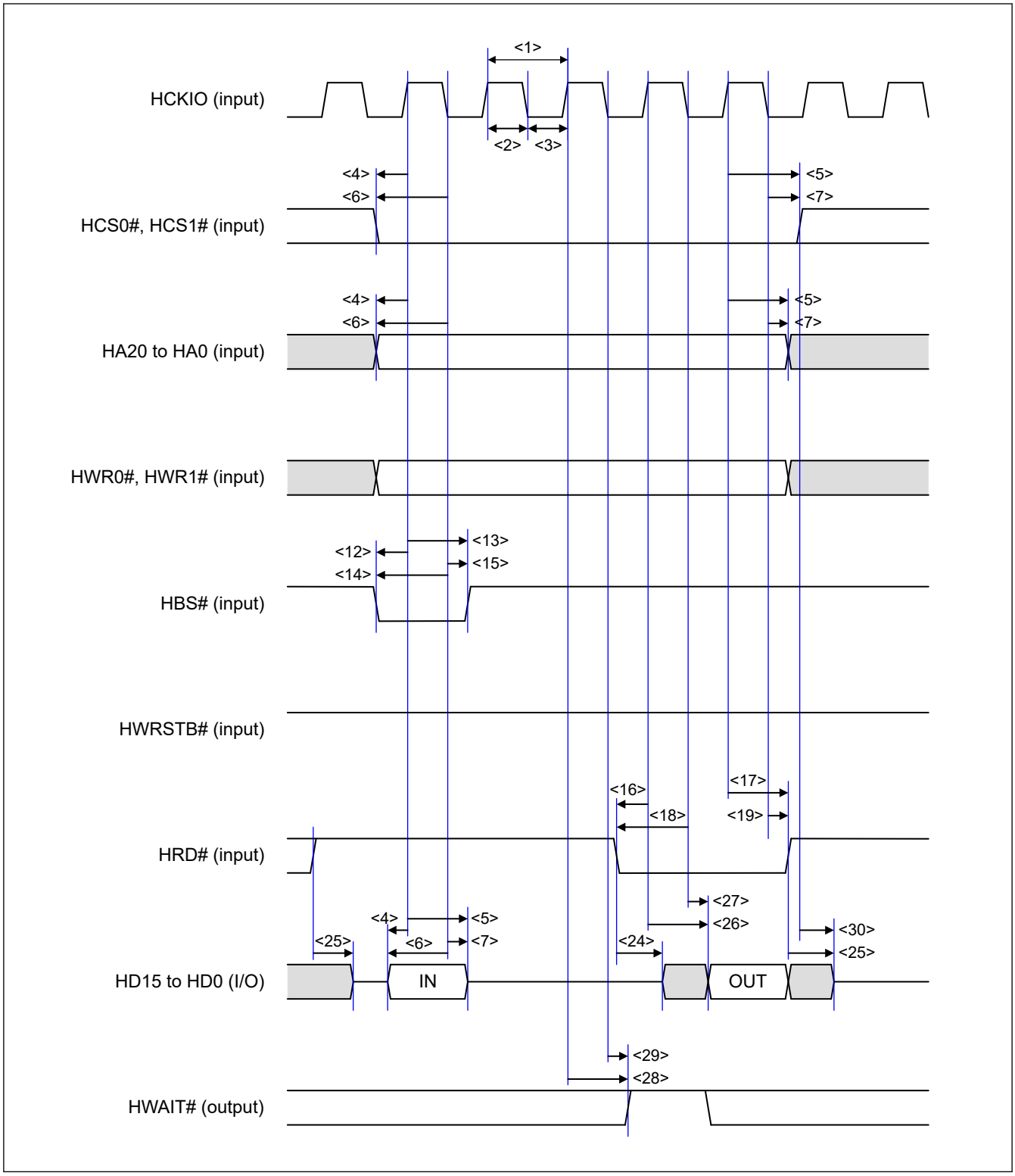


**Figure 2.102 PHOSTIF read timing (Synchronous Burst SRAM Type transfer mode, Address/Data multiplexing)**



Downloaded from Arrow.com.

## 2.6 USB Characteristics

**Table 2.45 On-chip USB low-speed (host only) characteristics**

| Parameter | Symbol | Min. | Typ. | Max. | Unit | Reference figure |
|---|---|---|---|---|---|---|
| Rising time | $t_{LR}$ | 75 | — | 300 | ns | Figure 2.103, Figure 2.104 |
| Falling time | $t_{LF}$ | 75 | — | 300 | ns | |
| Rising/falling time ratio | $t_{LR}/t_{LF}$ | 80 | — | 125 | % | |

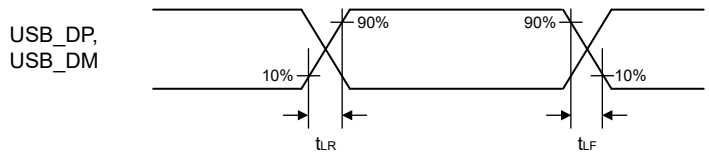


**Figure 2.103 USB_DP, USB_DM output timing (low-speed/host only)**

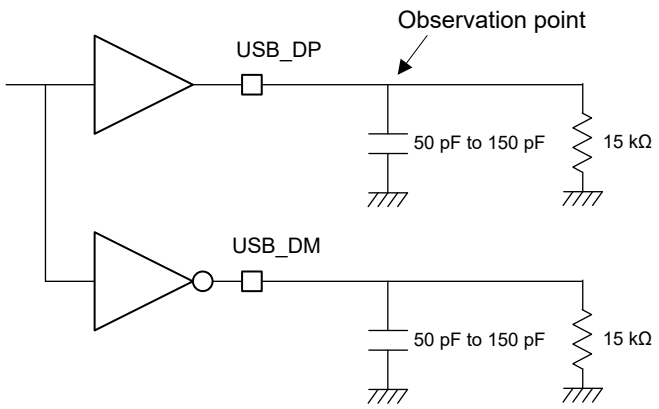


**Figure 2.104 Measurement circuit (low-speed/host only)**

**Table 2.46 On-chip USB full-speed characteristics**

| Parameter | Symbol | Min. | Typ. | Max. | Unit | Reference figure |
|---|---|---|---|---|---|---|
| Rising time | $t_{FR}$ | 4 | — | 20 | ns | Figure 2.105, Figure 2.106 |
| Falling time | $t_{FF}$ | 4 | — | 20 | ns | |
| Rising/falling time ratio | $t_{FR}/t_{FF}$ | 90 | — | 111.11 | % | |

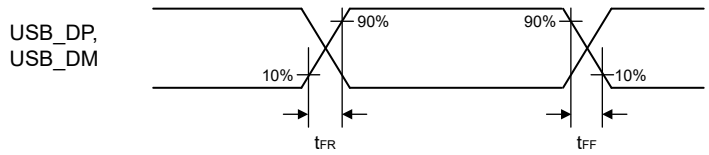


**Figure 2.105 USB_DP, USB_DM output timing (full speed)**



Downloaded from Arrow.com.

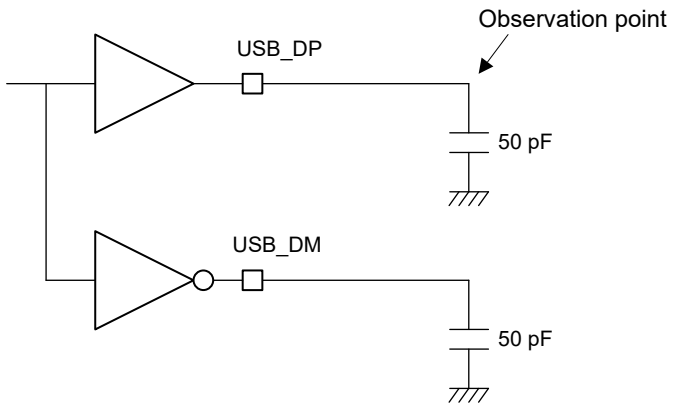


**Figure 2.106 Measurement circuit (full speed)**

**Table 2.47 On-chip USB high-speed characteristics**

| Parameter | Symbol | Min. | Typ. | Max. | Unit | Reference figure |
|---|---|---|---|---|---|---|
| Rising time | $t_{HSR}$ | — | — | 2.133 | V/μs | Figure 2.107, Figure 2.108 |
| Falling time | $t_{HSF}$ | — | — | 2.133 | V/μs | |
| Output resistors (also used as high-speed terminating resistor) | $Z_{HSDRV}$ | 40.5 | — | 49.5 | Ω | — |

Note: The output resistors (ZHSDRV) for connection to the USB_DP and USB_DM pins are within the LSI.

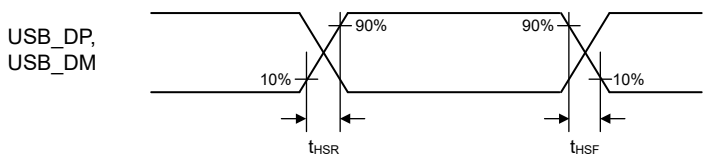


**Figure 2.107 USB_DP, USB_DM output timing (high speed)**

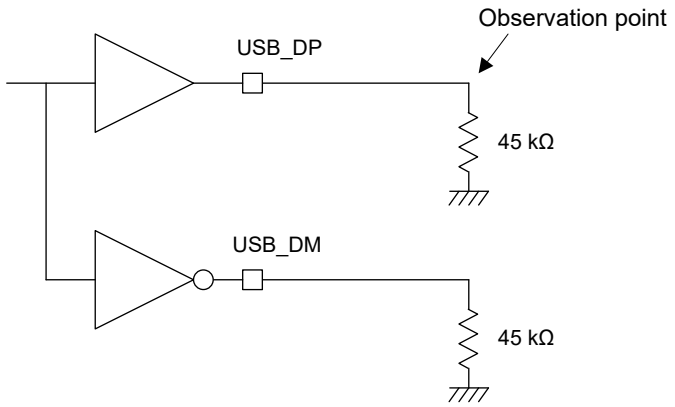


**Figure 2.108 Measurement circuit (high speed)**



Downloaded from Arrow.com.

## 2.7 A/D Conversion Characteristics

**Table 2.48 12-Bit A/D (unit 0) conversion characteristics**

| Parameter | | Min. | Typ. | Max. | Unit | Reference figure |
|---|---|---|---|---|---|---|
| Resolution | | 12 | | | bits | — |
| Analog input capacitance | | — | — | 13 | pF | — |
| Channel-dedicated sample-and-hold circuits in use (AN000 to AN002) | Conversion time*1 Permissible signal source impedance Max. = 1.0 kΩ | 1.52 | — | — | μs | — |
| | Offset error | — | — | ±13 | LSB | — |
| | Full-scale error | — | — | ±13 | LSB | — |
| | Quantization error | — | ±0.5 | — | LSB | — |
| | Absolute accuracy | — | — | ±14 | LSB | — |
| | DNL differential non-linearity error | — | — | ±3 | LSB | — |
| | INL integral non-linearity error | — | — | ±4 | LSB | — |
| | Holding characteristics of sample-and-hold circuits | — | — | 2.67 | μs | — |
| | Dynamic range | 0.15 | — | VREFH0 - 0.15 | V | — |
| Channel-dedicated sample-and-hold circuits not in use (AN000 to AN007) | Conversion time*1 Permissible signal source impedance Max. = 1.0 kΩ | 0.84 | — | — | μs | — |
| | Offset error | — | — | ±11 | LSB | — |
| | Full-scale error | — | — | ±11 | LSB | — |
| | Quantization error | — | ±0.5 | — | LSB | — |
| | Absolute accuracy | — | — | ±12 | LSB | — |
| | DNL differential non-linearity error | — | — | ±3 | LSB | — |
| | INL integral non-linearity error | — | — | ±4 | LSB | — |

Note: The specified values in the table apply when there is no access to the external bus during A/D conversion. If access proceeds during A/D conversion, values may not fall within the specified ranges.

Note 1. The conversion time is the total of the sampling time and the comparison time.

**Table 2.49 12-Bit A/D (unit 1) conversion characteristics**

| Parameter | | Min. | Typ. | Max. | Unit | Reference figure |
|---|---|---|---|---|---|---|
| Resolution | | 12 | | | bits | — |
| Conversion time*1 | Permissible signal source impedance Max = 1.0 kΩ | 0.84 | — | — | μs | — |
| Analog input capacitance | | — | — | 13 | pF | — |
| Offset error | | — | — | ±11 | LSB | — |
| Full-scale error | | — | — | ±11 | LSB | — |
| Quantization error | | — | ±0.5 | — | LSB | — |
| Absolute accuracy | | — | — | ±12 | LSB | — |
| DNL differential non-linearity error | | — | — | ±3 | LSB | — |
| INL integral non-linearity error | | — | — | ±4 | LSB | — |

Note: The specified values in the table apply when there is no access to the external bus during A/D conversion. If access proceeds during A/D conversion, values may not fall within the specified ranges.



Downloaded from Arrow.com.

Note 1. The conversion time is the total of the sampling time and the comparison time.

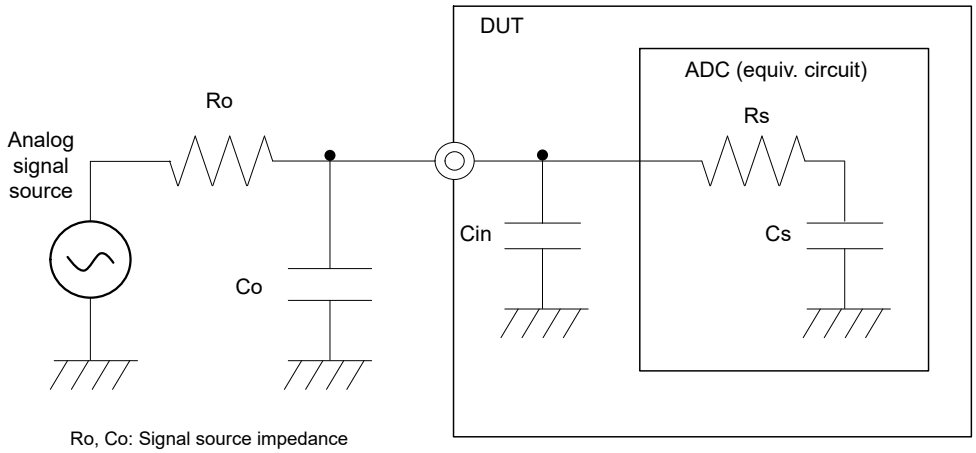


Ro, Co: Signal source impedance
Cin: Internal parasitic capacitance (package, I/O, etc.)
Rs, Cs: ADC equivalent circuit impedance (With sample-and-hold circuits: Rs = 1.5 kΩ and Cs = 4 pF. Without sample-and-hold circuits: Rs = 0.75 kΩ and Cs = 3 pF. (Typical))

**Figure 2.109 A/D converter equivalent circuit and peripheral configuration diagram**

## 2.8 Temperature Sensor Characteristics

**Table 2.50 Temperature sensor characteristics**

| Parameter | Min. | Typ. | Max. | Unit | Test Conditions |
|---|---|---|---|---|---|
| Relative accuracy | — | ±1 | — | °C | *1 |
| Temperature slope | — | 0.0625 | — | °C/LSB | — |
| Output code (at 25°C) | — | 1545 (decimal) | — | — | TSUSAD register |

Note 1. 2-point calibration (Tj = 25°C and Tj = 85°C) and 8 times averaging.

## 2.9 Debug Interface Timing

Condition: $V_{OH}$ = VCC33 × 0.5, $V_{OL}$ = VCC33 × 0.5

**Table 2.51 Debug interface timing (1 of 2)**

| Parameter | | Symbol | Min. | Max. | Unit | Reference figure |
|---|---|---|---|---|---|---|
| TCK cycle time | With an ICE connected | $t_{TCKcyc}$ | 30*1 | — | ns | Figure 2.110 |
| | For use in BSCAN | | 80 | — | | |
| TCK high pulse width | | $t_{TCKH}$ | 0.4 | 0.6 | $t_{TCKcyc}$ | |
| TCK low pulse width | | $t_{TCKL}$ | 0.4 | 0.6 | $t_{TCKcyc}$ | |
| TDI setup time | | $t_{TDIS}$ | 5 | — | ns | Figure 2.111 Output load: 30 pF |
| TDI hold time | | $t_{TDIH}$ | 5 | — | ns | |
| TMS/SWDIO setup time | | $t_{TMSS}$ | 5 | — | ns | |
| TMS/SWDIO hold time | | $t_{TMSH}$ | 5 | — | ns | |
| SWDIO delay time | | $t_{SWDO}$ | — | 15 | ns | |
| TDO delay time | With an ICE connected | $t_{TDOD}$ | — | 15 | ns | |
| | For use in BSCAN | | — | 22 | | |



Downloaded from Arrow.com.

**Table 2.51 Debug interface timing (2 of 2)**

| Parameter | | Symbol | Min. | Max. | Unit | Reference figure |
|---|---|---|---|---|---|---|
| Capture register setup time | | $t_{CAPTS}$ | 5 | — | ns | Figure 2.112 |
| Capture register hold time | | $t_{CAPTH}$ | 5 | — | ns | |
| Update register delay time | | $t_{UPDATED}$ | — | 15 | ns | |
| Trace clock cycle | | $t_{TCYC}$ | 20 | — | ns | Figure 2.113 Output load: 15 pF |
| Trace data delay time | Trace clock: P18_6 | $t_{TDT}$ | -2.9 | 3.2 | ns | |
| | Trace clock: P17_4 | | -2.8 | 3.3 | | |
| | Trace clock: P22_2 | | -2.2*2 | 4.0 | | |

Note 1. This value is the minimum cycle time for the normal operation of internal circuits.
The actual cycle time should be determined in consideration of the TCK capture edge timing and cable length of the connected ICE.
Note 2. If P22_1 is not used as trace control, this value is -1.8 ns.

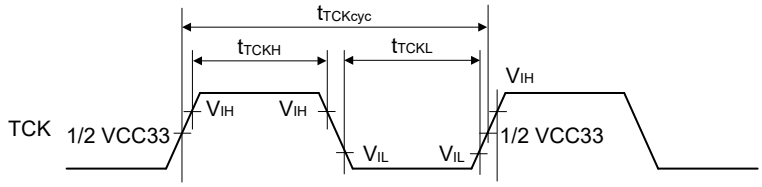


**Figure 2.110 TCK input timing**

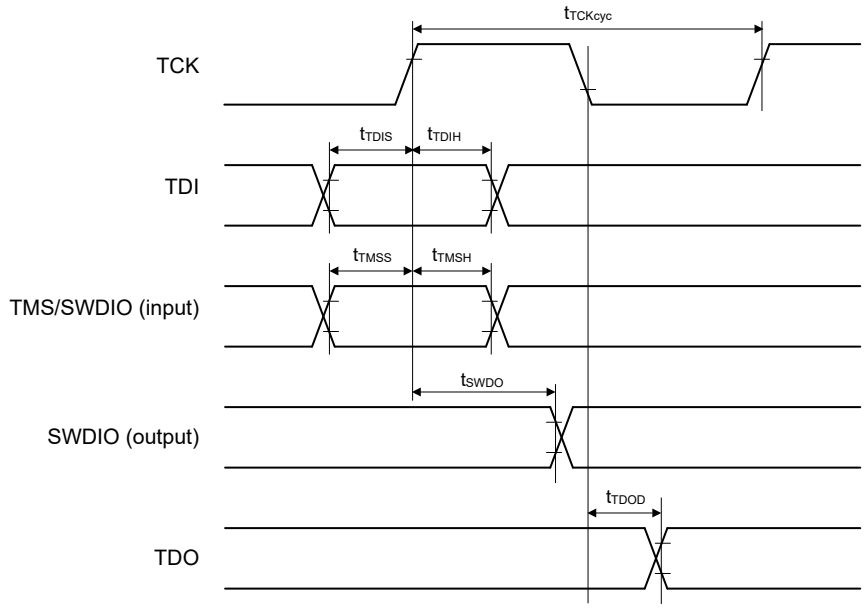


**Figure 2.111 Data transfer timing**



Downloaded from Arrow.com.

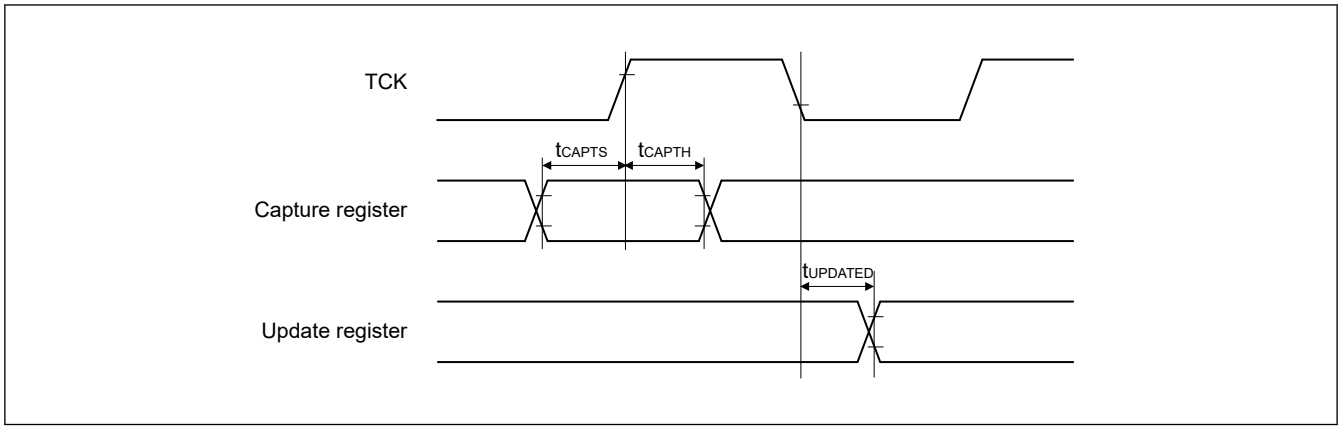


**Figure 2.112 Boundary scan input/output timing**

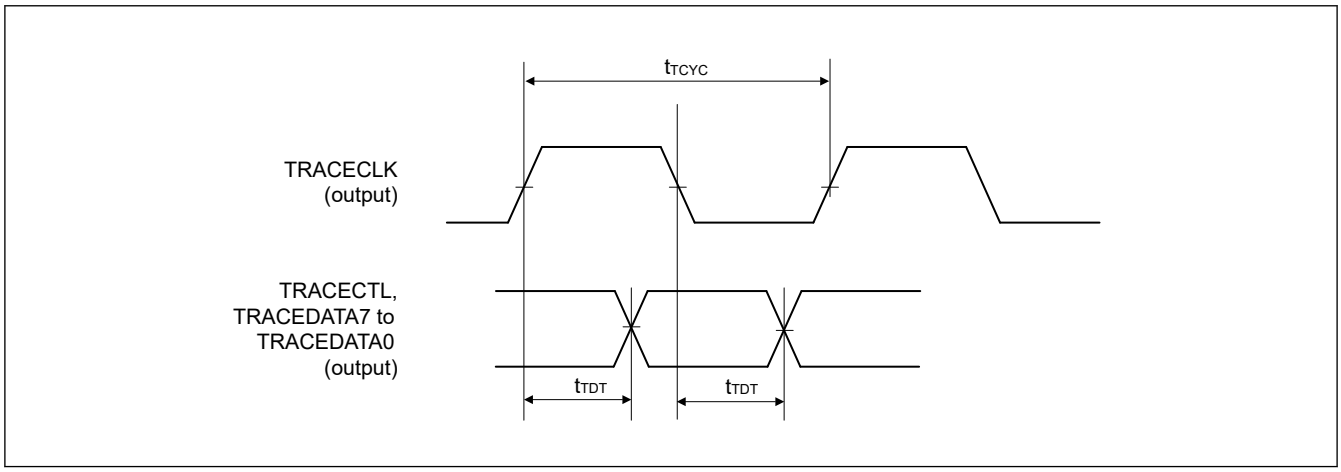


**Figure 2.113 Trace interface timing**



Downloaded from Arrow.com.

# Appendix 1. Package Dimensions

Information on the latest version of the package dimensions or mountings is displayed in “Packages” on the Renesas Electronics Corporation website.



Downloaded from Arrow.com.

| JEITA Package code | RENESAS code | MASS(TYP.)[g] |
|---|---|---|
| P-LFBGA225-13x13-0.80 | PLBG0225GB-A | 0.39 |

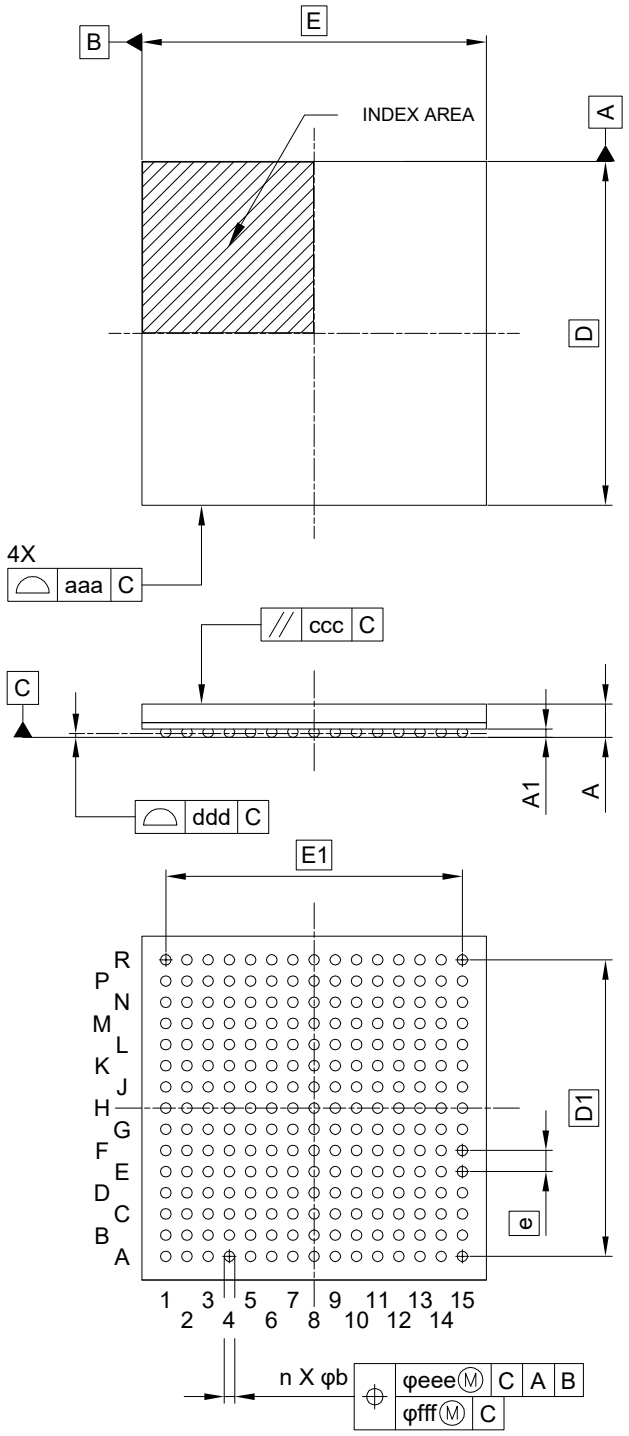


| Reference Symbol | Dimension in Millimeters | | |
|---|---|---|---|
| | Min. | Nom. | Max. |
| D | — | 13.00 | — |
| E | — | 13.00 | — |
| D1 | — | 11.20 | — |
| E1 | — | 11.20 | — |
| A | — | — | 1.40 |
| A1 | 0.27 | — | — |
| b | 0.38 | 0.43 | 0.48 |
| e | — | 0.80 | — |
| aaa | — | — | 0.15 |
| ccc | — | — | 0.20 |
| ddd | — | — | 0.12 |
| eee | — | — | 0.15 |
| fff | — | — | 0.08 |
| n | — | 225 | — |

**Figure A1.1 225 pin FBGA**



Downloaded from Arrow.com.

| JEITA Package code | RENESAS code | MASS(TYP.)[g] |
|---|---|---|
| P-LFBGA121-10x10-0.80 | PLBG0121GF-A | 0.23 |

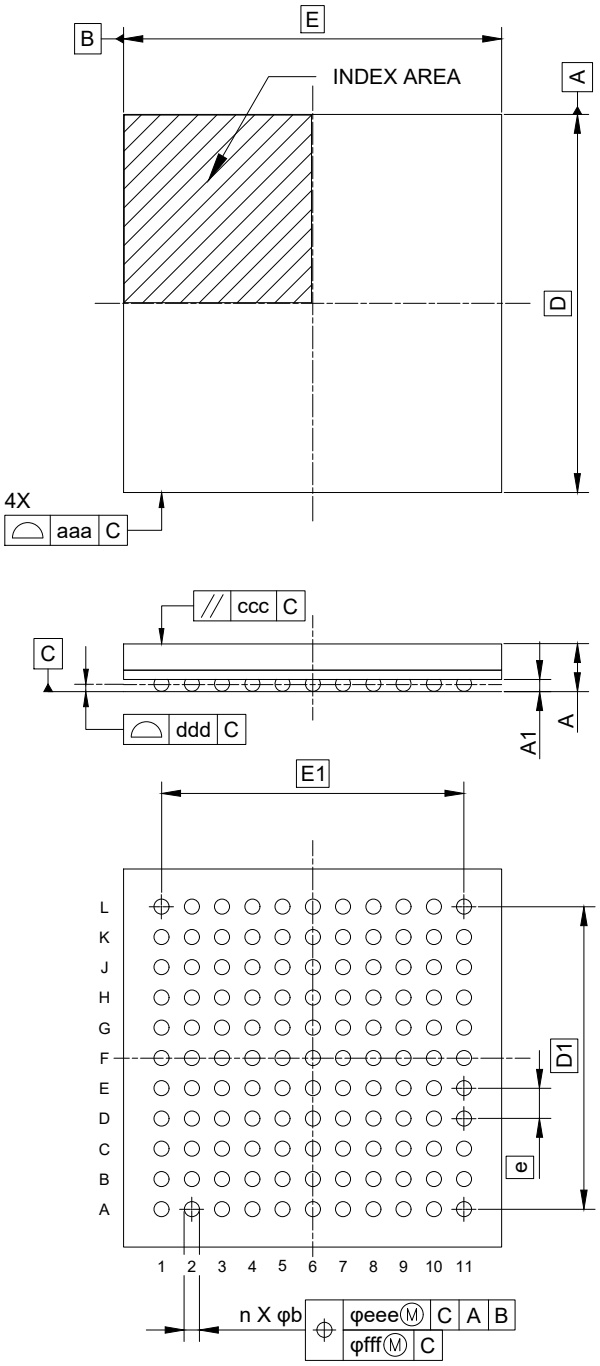


| Reference Symbol | Dimension in Millimeters | | |
|---|---|---|---|
| | Min. | Nom. | Max. |
| D | — | 10.00 | — |
| E | — | 10.00 | — |
| D1 | — | 8.00 | — |
| E1 | — | 8.00 | — |
| A | — | — | 1.40 |
| A1 | 0.27 | — | — |
| b | 0.38 | 0.43 | 0.48 |
| e | — | 0.80 | — |
| aaa | — | — | 0.15 |
| ccc | — | — | 0.20 |
| ddd | — | — | 0.12 |
| eee | — | — | 0.15 |
| fff | — | — | 0.08 |
| n | — | 121 | — |

**Figure A1.2 121 pin FBGA**



Downloaded from Arrow.com.

# Revision History

**Revision 1.00 — June 10, 2022**

- Initial release

**Revision 1.10 — July 29, 2022**

**2. Electrical Characteristics:**

- Corrected Table 2.21 Bus timing [Conditions: $V_{OH}$ = VCC33 × 0.5, $V_{OL}$ = VCC33 × 0.5, C = 15 pF (CKIO), 30 pF (others), $T_j$min = −40°C].
- Corrected Table 2.22 Bus timing [Conditions: $V_{OH}$ = VCC33 × 0.5, $V_{OL}$ = VCC33 × 0.5, C = 12 pF (CKIO), 12 pF (others), $T_j$min = −20°C].

**Revision 1.20 — September 30, 2022**

**1. Overview:**

- Corrected Table 1.3 System.
- Corrected Table 1.15 Others.

**2. Electrical Characteristics:**

- Corrected Figure 2.10 Mode input timing.
- Corrected Table 2.33 IIC timing.

**Revision 1.30 — October 31, 2023**

**1. Overview:**

- Updated Table 1.7 Timers.

**2. Electrical Characteristics:**

- Updated Table 2.35 SPI timing.
- Updated Table 2.40 Serial management interface timing.

**Revision 1.40 — March 31, 2026**

**Features:**

- Updated On-chip 32-bit Arm Cortex-R52 processor

**1. Overview:**

- Updated Table 1.1 CPU
- Updated Table 1.12 Security
- Updated Table 1.17 Product Lineup

**2. Electrical Characteristics:**

- Updated Table 2.1 Absolute maximum ratings
- Updated Table 2.2 Power supply
- Updated 2.3 Power On/Off Sequence
- Updated Table 2.3 Power on/off sequence timing
- Figure 2.1 Power on/off sequence
- Updated Table 2.16 Ethernet PHY reference clock output timing
- Updated Table 2.20 Reset, interrupt, and mode timing
- Updated Table 2.23 DMAC timing
- Updated Table 2.24 DMAC timing
- Updated Table 2.32 SCI timing
- Updated Table 2.36 xSPI timing
- Updated Figure 2.77 DS to CS signal timing
- Updated Table 2.37 ΔΣ interface timing
- Updated Table 2.38 Ethernet interface timing



Downloaded from Arrow.com.

# General Precautions in the Handling of Microprocessing Unit and Microcontroller Unit Products

The following usage notes are applicable to all Microprocessing unit and Microcontroller unit products from Renesas. For detailed usage notes on the products covered by this document, refer to the relevant sections of the document as well as any technical updates that have been issued for the products.

1. Precaution against Electrostatic Discharge (ESD)
   A strong electrical field, when exposed to a CMOS device, can cause destruction of the gate oxide and ultimately degrade the device operation. Steps must be taken to stop the generation of static electricity as much as possible, and quickly dissipate it when it occurs. Environmental control must be adequate. When it is dry, a humidifier should be used. This is recommended to avoid using insulators that can easily build up static electricity. Semiconductor devices must be stored and transported in an anti-static container, static shielding bag or conductive material. All test and measurement tools including work benches and floors must be grounded. The operator must also be grounded using a wrist strap. Semiconductor devices must not be touched with bare hands. Similar precautions must be taken for printed circuit boards with mounted semiconductor devices.
2. Processing at power-on
   The state of the product is undefined at the time when power is supplied. The states of internal circuits in the LSI are indeterminate and the states of register settings and pins are undefined at the time when power is supplied. In a finished product where the reset signal is applied to the external reset pin, the states of pins are not guaranteed from the time when power is supplied until the reset process is completed. In a similar way, the states of pins in a product that is reset by an on-chip power-on reset function are not guaranteed from the time when power is supplied until the power reaches the level at which resetting is specified.
3. Input of signal during power-off state
   Do not input signals or an I/O pull-up power supply while the device is powered off. The current injection that results from input of such a signal or I/O pull-up power supply may cause malfunction and the abnormal current that passes in the device at this time may cause degradation of internal elements. Follow the guideline for input signal during power-off state as described in your product documentation.
4. Handling of unused pins
   Handle unused pins in accordance with the directions given under handling of unused pins in the manual. The input pins of CMOS products are generally in the high-impedance state. In operation with an unused pin in the open-circuit state, extra electromagnetic noise is induced in the vicinity of the LSI, an associated shoot-through current flows internally, and malfunctions occur due to the false recognition of the pin state as an input signal become possible.
5. Clock signals
   After applying a reset, only release the reset line after the operating clock signal becomes stable. When switching the clock signal during program execution, wait until the target clock signal is stabilized. When the clock signal is generated with an external resonator or from an external oscillator during a reset, ensure that the reset line is only released after full stabilization of the clock signal. Additionally, when switching to a clock signal produced with an external resonator or by an external oscillator while program execution is in progress, wait until the target clock signal is stable.
6. Voltage application waveform at input pin
   Waveform distortion due to input noise or a reflected wave may cause malfunction. If the input of the CMOS device stays in the area between $V_{IL}$ (Max.) and $V_{IH}$ (Min.) due to noise, for example, the device may malfunction. Take care to prevent chattering noise from entering the device when the input level is fixed, and also in the transition period when the input level passes through the area between $V_{IL}$ (Max.) and $V_{IH}$ (Min.).
7. Prohibition of access to reserved addresses
   Access to reserved addresses is prohibited. The reserved addresses are provided for possible future expansion of functions. Do not access these addresses as the correct operation of the LSI is not guaranteed.
8. Differences between products
   Before changing from one product to another, for example to a product with a different part number, confirm that the change will not lead to problems. The characteristics of a microprocessing unit or microcontroller unit products in the same group but having a different part number might differ in terms of internal memory capacity, layout pattern, and other factors, which can affect the ranges of electrical characteristics, such as characteristic values, operating margins, immunity to noise, and amount of radiated noise. When changing to a product with a different part number, implement a system-evaluation test for the given product.

Downloaded from Arrow.com.

# Notice

1. Descriptions of circuits, software and other related information in this document are provided only to illustrate the operation of semiconductor products and application examples. You are fully responsible for the incorporation or any other use of the circuits, software, and information in the design of your product or system. Renesas Electronics disclaims any and all liability for any losses and damages incurred by you or third parties arising from the use of these circuits, software, or information.
2. Renesas Electronics hereby expressly disclaims any warranties against and liability for infringement or any other claims involving patents, copyrights, or other intellectual property rights of third parties, by or arising from the use of Renesas Electronics products or technical information described in this document, including but not limited to, the product data, drawings, charts, programs, algorithms, and application examples.
3. No license, express, implied or otherwise, is granted hereby under any patents, copyrights or other intellectual property rights of Renesas Electronics or others.
4. You shall be responsible for determining what licenses are required from any third parties, and obtaining such licenses for the lawful import, export, manufacture, sales, utilization, distribution or other disposal of any products incorporating Renesas Electronics products, if required.
5. You shall not alter, modify, copy, or reverse engineer any Renesas Electronics product, whether in whole or in part. Renesas Electronics disclaims any and all liability for any losses or damages incurred by you or third parties arising from such alteration, modification, copying or reverse engineering.
6. Renesas Electronics products are classified according to the following two quality grades: “Standard” and “High Quality”. The intended applications for each Renesas Electronics product depends on the product’s quality grade, as indicated below.
   "Standard": Computers; office equipment; communications equipment; test and measurement equipment; audio and visual equipment; home electronic appliances; machine tools; personal electronic equipment; industrial robots; etc.
   "High Quality": Transportation equipment (automobiles, trains, ships, etc.); traffic control (traffic lights); large-scale communication equipment; key financial terminal systems; safety control equipment; etc.
   Unless expressly designated as a high reliability product or a product for harsh environments in a Renesas Electronics data sheet or other Renesas Electronics document, Renesas Electronics products are not intended or authorized for use in products or systems that may pose a direct threat to human life or bodily injury (artificial life support devices or systems; surgical implantations; etc.), or may cause serious property damage (space system; undersea repeaters; nuclear power control systems; aircraft control systems; key plant systems; military equipment; etc.). Renesas Electronics disclaims any and all liability for any damages or losses incurred by you or any third parties arising from the use of any Renesas Electronics product that is inconsistent with any Renesas Electronics data sheet, user’s manual or other Renesas Electronics document.
7. No semiconductor product is absolutely secure. Notwithstanding any security measures or features that may be implemented in Renesas Electronics hardware or software products, Renesas Electronics shall have absolutely no liability arising out of any vulnerability or security breach, including but not limited to any unauthorized access to or use of a Renesas Electronics product or a system that uses a Renesas Electronics product. RENESAS ELECTRONICS DOES NOT WARRANT OR GUARANTEE THAT RENESAS ELECTRONICS PRODUCTS, OR ANY SYSTEMS CREATED USING RENESAS ELECTRONICS PRODUCTS WILL BE INVULNERABLE OR FREE FROM CORRUPTION, ATTACK, VIRUSES, INTERFERENCE, HACKING, DATA LOSS OR THEFT, OR OTHER SECURITY INTRUSION (“Vulnerability Issues”). RENESAS ELECTRONICS DISCLAIMS ANY AND ALL RESPONSIBILITY OR LIABILITY ARISING FROM OR RELATED TO ANY VULNERABILITY ISSUES. FURTHERMORE, TO THE EXTENT PERMITTED BY APPLICABLE LAW, RENESAS ELECTRONICS DISCLAIMS ANY AND ALL WARRANTIES, EXPRESS OR IMPLIED, WITH RESPECT TO THIS DOCUMENT AND ANY RELATED OR ACCOMPANYING SOFTWARE OR HARDWARE, INCLUDING BUT NOT LIMITED TO THE IMPLIED WARRANTIES OF MERCHANTABILITY, OR FITNESS FOR A PARTICULAR PURPOSE.
8. When using Renesas Electronics products, refer to the latest product information (data sheets, user’s manuals, application notes, “General Notes for Handling and Using Semiconductor Devices” in the reliability handbook, etc.), and ensure that usage conditions are within the ranges specified by Renesas Electronics with respect to maximum ratings, operating power supply voltage range, heat dissipation characteristics, installation, etc. Renesas Electronics disclaims any and all liability for any malfunctions, failure or accident arising out of the use of Renesas Electronics products outside of such specified ranges.
9. Although Renesas Electronics endeavors to improve the quality and reliability of Renesas Electronics products, semiconductor products have specific characteristics, such as the occurrence of failure at a certain rate and malfunctions under certain use conditions. Unless designated as a high reliability product or a product for harsh environments in a Renesas Electronics data sheet or other Renesas Electronics document, Renesas Electronics products are not subject to radiation resistance design. You are responsible for implementing safety measures to guard against the possibility of bodily injury, injury or damage caused by fire, and/or danger to the public in the event of a failure or malfunction of Renesas Electronics products, such as safety design for hardware and software, including but not limited to redundancy, fire control and malfunction prevention, appropriate treatment for aging degradation or any other appropriate measures. Because the evaluation of microcomputer software alone is very difficult and impractical, you are responsible for evaluating the safety of the final products or systems manufactured by you.
10. Please contact a Renesas Electronics sales office for details as to environmental matters such as the environmental compatibility of each Renesas Electronics product. You are responsible for carefully and sufficiently investigating applicable laws and regulations that regulate the inclusion or use of controlled substances, including without limitation, the EU RoHS Directive, and using Renesas Electronics products in compliance with all these applicable laws and regulations. Renesas Electronics disclaims any and all liability for damages or losses occurring as a result of your noncompliance with applicable laws and regulations.
11. Renesas Electronics products and technologies shall not be used for or incorporated into any products or systems whose manufacture, use, or sale is prohibited under any applicable domestic or foreign laws or regulations. You shall comply with any applicable export control laws and regulations promulgated and administered by the governments of any countries asserting jurisdiction over the parties or transactions.
12. It is the responsibility of the buyer or distributor of Renesas Electronics products, or any other party who distributes, disposes of, or otherwise sells or transfers the product to a third party, to notify such third party in advance of the contents and conditions set forth in this document.
13. This document shall not be reprinted, reproduced or duplicated in any form, in whole or in part, without prior written consent of Renesas Electronics.
14. Please contact a Renesas Electronics sales office if you have any questions regarding the information contained in this document or Renesas Electronics products.

(Note1) “Renesas Electronics” as used in this document means Renesas Electronics Corporation and also includes its directly or indirectly controlled subsidiaries.
(Note2) “Renesas Electronics product(s)” means any product developed or manufactured by or for Renesas Electronics.

(Rev.5.0-1 October 2020)

## Corporate Headquarters

TOYOSU FORESIA, 3-2-24 Toyosu,
Koto-ku, Tokyo 135-0061, Japan
www.renesas.com

## Contact Information

For further information on a product, technology, the most up-to-date version of a document, or your nearest sales office, please visit:
www.renesas.com/contact/

## Trademarks

Renesas and the Renesas logo are trademarks of Renesas Electronics Corporation. All trademarks and registered trademarks are the property of their respective owners.

© 2026 Renesas Electronics Corporation. All rights reserved.

Downloaded from Arrow.com.