K4 Drive System Development Kit

Operating Instructions

ebmpapst

the engineer's choice

Downloaded from Arrow.com.

Box Contents / Required Components

- K4 Switch Box
- ECI-63.40 or VDC-3-49.15 Motor (-002 and -003 kit versions only)
- RS485 adapter
- RS485 adapter driver download CD
- USB-A to USB-B cable
- RS485 connection wires

Not included:
- Windows computer with disk drive and a free USB port
- DC power supply

Note: If you do not plan on attaching the motor to a load, the DC Power supply should be able to output about the nominal motor current. Nominal current can be found on the motor label. If you do plan on loading the motor, then the power supply should be able to supply 3 times the nominal current of the motor.

Products not in perspective scale.

Downloaded from Arrow.com.

Switch Box Layout

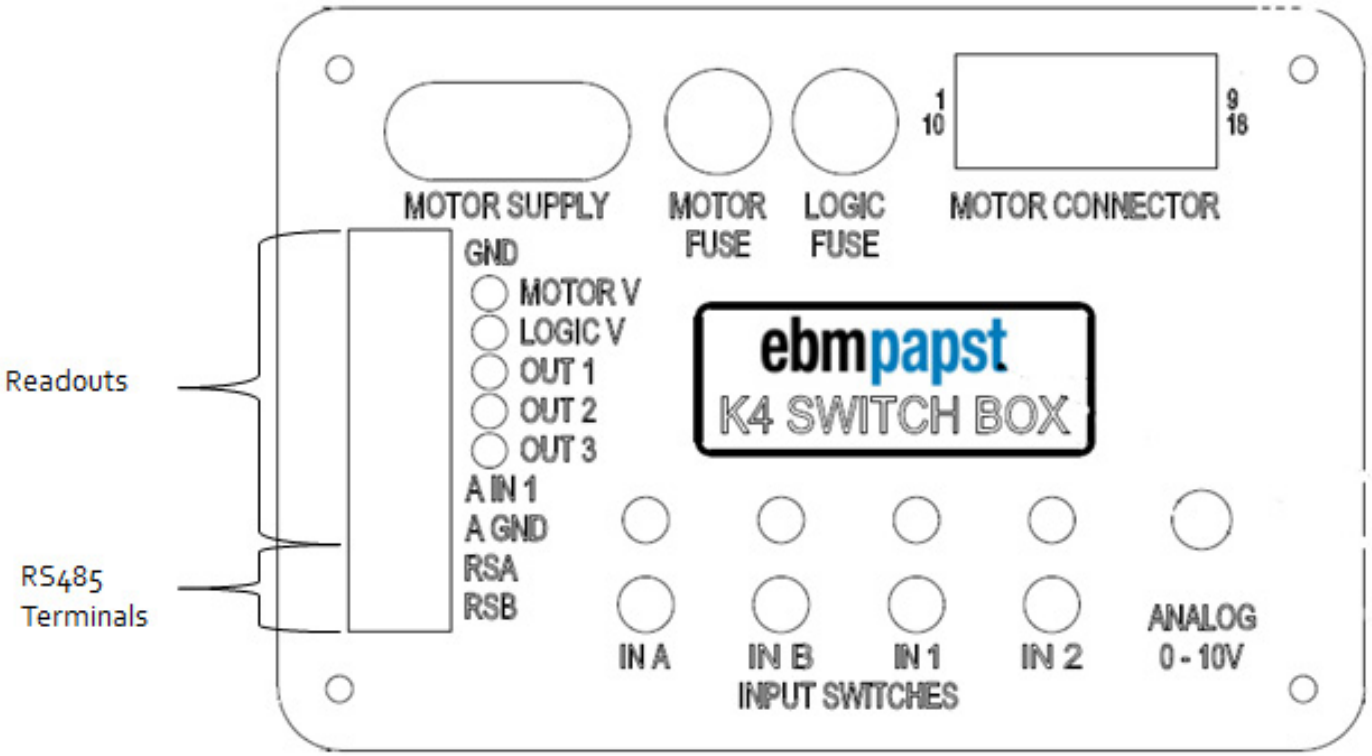

- The motor supply terminals are the power input to the motor and the DC to DC converter in the box that generates 24V logic power for the motor's electronics. Red is positive, black is negative (ground).
- The motor and logic fuses protect the motor from an over current in the event too much power is drawn.
- The motor connector port provides the electrical contact between the Switch Box outputs and the motor inputs.
- The RS485 terminals are the inputs for communication between the motor and a computer via the USB to RS485 adapter included in the kit.
- The readout terminals are meant to allow for monitoring different voltages and provide feedback from the motor.
- The input switches control the digital 24V signals to the motor, which enable and control motor operation. The switches have 3 positions: Up is toggle-on, middle is off, down is momentary-on.
- The 0-10V analog dial controls the analog voltage signal generated by the Switch Box and read by the motor. This is usually used as a speed control signal.

Note: For further detail of the Switch Box's I/O, see the specification section on page 14 of these instructions.

Downloaded from Arrow.com.

Before Starting

1. It is encouraged that you do an initial run through of these instructions with no load connected to the motor. If you do have a load connected it is important that you make sure the load profile is appropriate for the motor. If the motor is outputting too much torque for too long, a protective feature in the software will shut the motor down temporarily. See the "K4 drive systems - Brilliantly versatile" catalog page for the motor you are using to find appropriate load characteristics. You can access the catalog by:
    a. Clicking this link:
       https://www.ebmpapst.us/media/content/literature/brochures/K4_drive_systems.pdf
    b. Visiting our website: www.ebmpapst.us -> Infocenter -> Downloads -> Brochures -> "K4 drive systems - Brilliantly versatile"
    c. Or by scanning this QR code:

2. It is likely that your DC power supply has a safety mechanism that will temporarily cut the power in the case of unacceptably high current draw or high back voltage. If your supply does cut out, the motor may enter an inactive state until reactivated. In order to return the motor to normal operation, turn all digital input switches on the Switch Box off, then return the inputs to your desired state. This safety mechanism can activate if the motor is over-torqued, or if the motor is set to accelerate or decelerate too fast.

Note: Standard ebm-papst K4 motors come with a wire lead for a ballast resistor which can be used to reduce back-feeding current into the power supply during deceleration.

3. Please contact ebm-papst if you have any questions or concerns:
    a. Go to our website (www.ebmpapst.us) and click on Contact
    b. Email us at sales@us.ebmpapst.com with the subject header "K4 Dev Kit Question"

Downloaded from Arrow.com.

Initial Setup

1. Verify power is disconnected from the Switch Box.

2. Fix the motor you are using so that it cannot move during operation. The motor can jerk aggressively if not properly secured.

3. Insert the motor's 18 pin connector into the "motor connector" port on the Switch Box (only fits one way). If you are using a motor that did not come in the kit, then wire the motor to the included connector using the K4 wiring table and the motor connector pinout table on page 13 of these instructions.

4. Use the included wires in the grey shielding to connect the RS485 adapter into the RSA/RSB terminals on the Switch Box. Make sure to wire the A terminal on the adapter to the RSA terminal on the box and likewise B to RSB. Do not plug the adapter USB into the computer yet.

5. While disconnected from the Switch Box, check that your DC power supply does not output more than the rated motor voltage when turned on. Rated motor voltage can be found on the motor label or on the motor's catalog page (see page 4 "Before Starting" note 1 for catalog download).

6. Ensure that your power supply is off. Connect the power wires to the motor supply terminals, negative first then positive. As an additional check, connect a separate measuring device to the power terminals or the "Motor V" and "GND" readout terminals to have an independent reading of the motor voltage.

7. Check all connections to make sure they are secure. Switch all digital input switches to the off position (middle) and turn the 0-10V Analog Dial all the way to the left (counterclockwise). When you turn your power supply on, check if either your supply or your separate measuring device reads a significantly higher value than the rated motor voltage. If so, switch the supply off immediately and disconnect it from the Switch Box. Reconfigure the supply such that it will not supply more than the motor voltage, then repeat this step.

    - If you suspect an overvoltage has caused damage to the motor, then shut off power immediately and contact ebm-papst technical support (see page 4 "Before Starting" note 3).

8. The "Motor V" and "Logic V" LEDs next to the readout terminals should light up if sufficient voltage is applied. If you like, you can check these voltages with the readout terminals by connecting a measuring device between the desired readout and ground. "Motor V" should read the same as the input voltage and "Logic V" should always read 24V (as long as the input voltage is 24V or higher). "Out 1/2/3" are digital 24V signals and require a load resistor to ground (10K typ.), see box specification below for more terminal information.

    - "Out 1/2/3" are configurable signals that can be set to activate under certain conditions. They will not be particularly useful at this point so you can ignore them for now.

9. If the power supply voltage is at an acceptable level, the motor is secured, and the RS485 adapter is still disconnected from the computer, then you can continue with the driveSTUDIO setup.

Downloaded from Arrow.com.

driveSTUDIO Setup

1. The included CD has the driver files for the RS485 adapter and a setup application to install them. Navigate to the CD's files with file explorer and click on the "Converter" folder. Run "CDM20830_Setup" for any Windows versions other than 8.1 or "CDM20830 for Windows 8.1" if you are using Windows 8.1. Follow the installation prompts that pop up.

2. In order to download driveSTUDIO:
    a. Clicking this link: http://info.ebmpapst.us/drivestudio-download -> fill out the form, and click on the driveSTUDIO zip link. Extract the downloaded folder's contents into a file location of your
    b. Go to our website: www.ebmpapst.us -> Support -> Digital Downloads

3. Run the driveSTUDIO application and click on the "Parameters" option if the welcome window pops up.

4. On the left side of the screen there are 3 sections:
    - "Device Information" reports the part number and ordering number of the connected device.
    - "Communication" allows for enabling and disabling communication with the motor electronics.
    - "Actual Values" reports the real time motor state values.

Note: The "Current" value in "Actual Values" is the winding current, not the current being drawn from the power supply.

Downloaded from Arrow.com.

5. Use the USB cable to connect the RS485 adapter to your computer and click the connect button in the communication section on the upper left side of the screen.

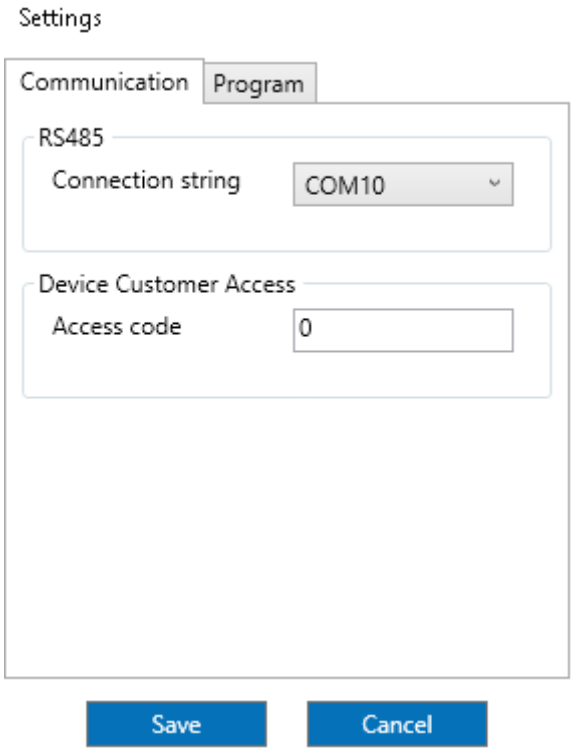

6. If an error window pops up, close it and find the proper COM port of the adapter USB in Windows Device Manager under Ports (COM & LPT). Unplugging and re-plugging in the USB will reveal which COM port number it is assigned. Next, in driveSTUDIO click on file -> Settings. Choose the proper COM port in the "Connection String" drop-down, set access code to 0, and click save. Now click the connect button - the motor should show up under "Device Information" at the top left of the screen.

7. There are two control methods that can now be used to run the motor: Demo mode (also called RS485 mode), and Digital input mode.

Downloaded from Arrow.com.

RS484/Demo Mode

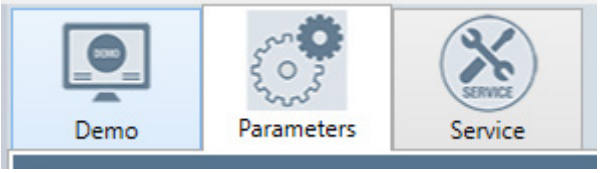

1. Demo Mode is a control method that allows you to directly control the speed or position in real time through the drive STUDIO interface. Click on the "Demo" tab at the top of the screen.

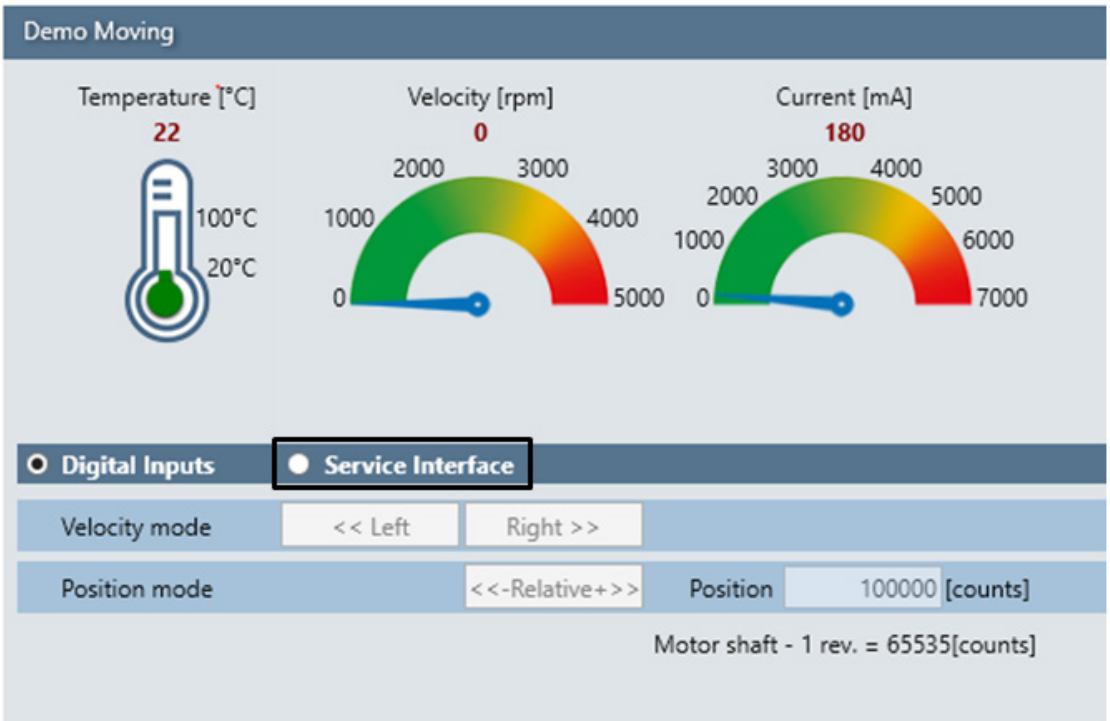

2. The demo page has some simple readouts and control features. At the top, there are displays for real-time temperature, velocity, and current values. Just under these are some grayed out controls. Ensure all switches on the Switch Box are in the off position (middle). Click on the "Service Interface" radio button just above the grayed out "Velocity mode" controls (not the "Service" tab at the top of the screen).
    - If the button is already selected and the buttons are still grayed, click the "Digital Inputs" button next to it and then click back on the "Service Interface" button.

Downloaded from Arrow.com.

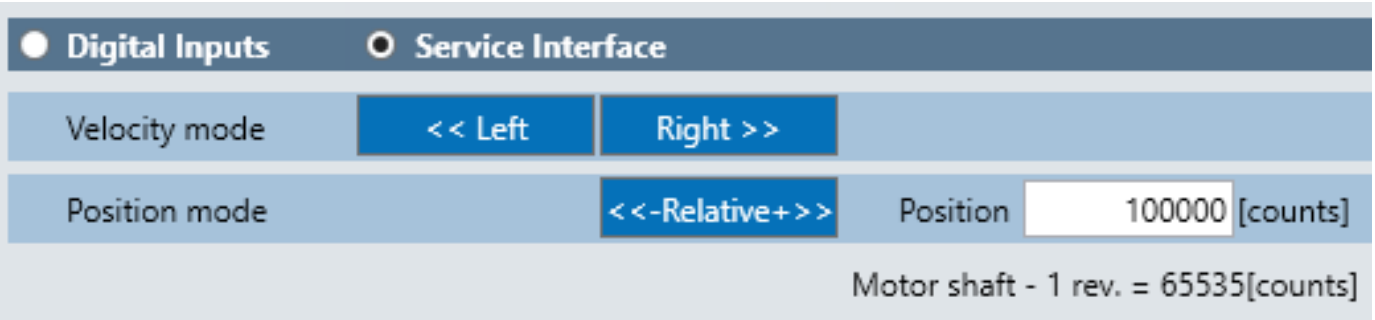

3. The "Velocity mode" and "Position mode" control buttons should now be colored blue indicating that the motor is in Demo Mode (also called RS485 mode). Notice on the left side of the screen at the bottom of the "Actual Values" section is the "Driving set" value, which indicates the operating mode that the motor is in. At this point the driving set should read "91" with "Demo Moving" underneath.

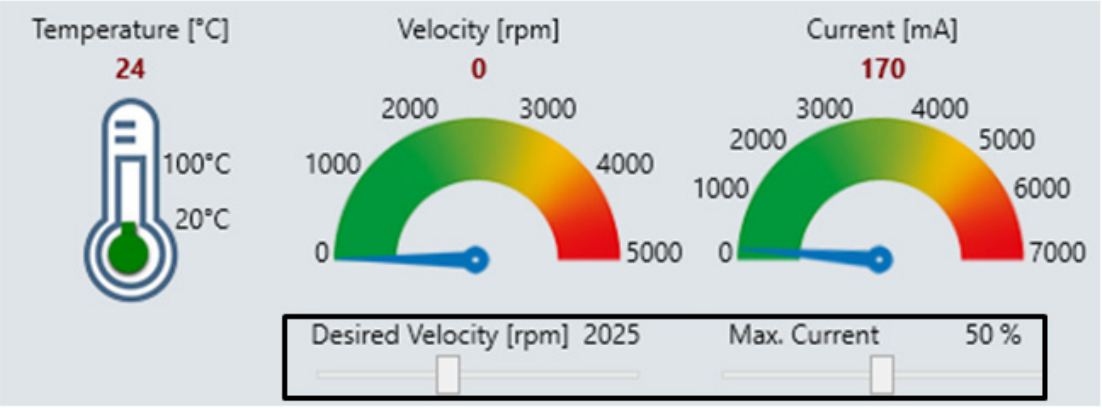

4. Slider controls are located under the Velocity and Current displays on the top of the screen. These are used to set the target speed and the maximum allowed winding current for the motor. Select your desired speed and limit the maximum current to 50%.
    - If you have a load connected you can increase the maximum current, but if the load is too high then an internal protection may shut the motor off. Check your motor's catalog page for the allowable loading profile (see page 4 "Before Starting" note 1 for catalog download).

5. "IN A" and "IN B" on the Switch Box enable the motor so that it can be controlled. Without one of these switches on, the motor will not move. Switch on (up position) either digital input A or input B on the Switch Box. The motor is now ready to accept commands.

Downloaded from Arrow.com.

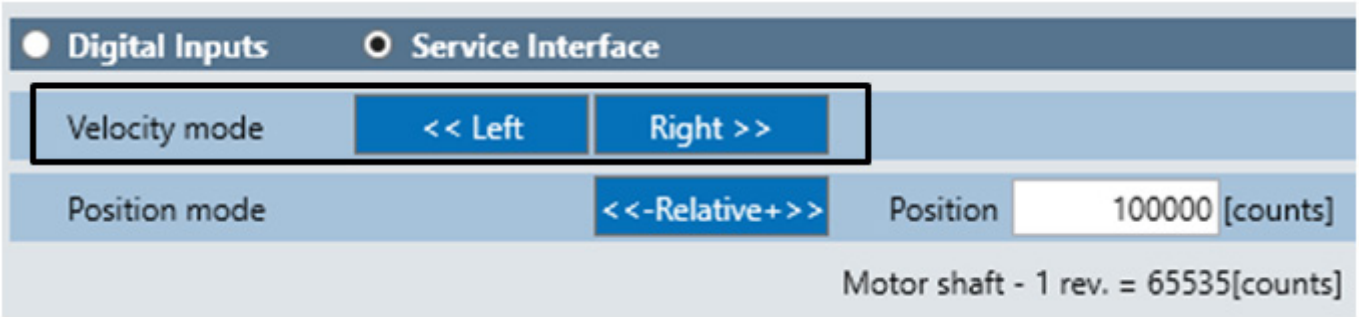

6. To make the motor spin at the set velocity, click and hold the "Left" or "Right" button on the screen. Looking into the shaft axially, the buttons will make the shaft spin counterclockwise and clockwise, respectively. While holding one of the velocity buttons, notice the "Velocity" value under "Actual Values" or in the velocity display at the top of the screen reads very close to the set speed.
    - If the motor started running and then stopped suddenly and doesn't respond afterward, you may have tripped a safety feature in both the power supply and the motor. See page 4 "Before Starting" note 2 for reset instructions. Lower the maximum allowed current with the slider and retry until this stops happening.

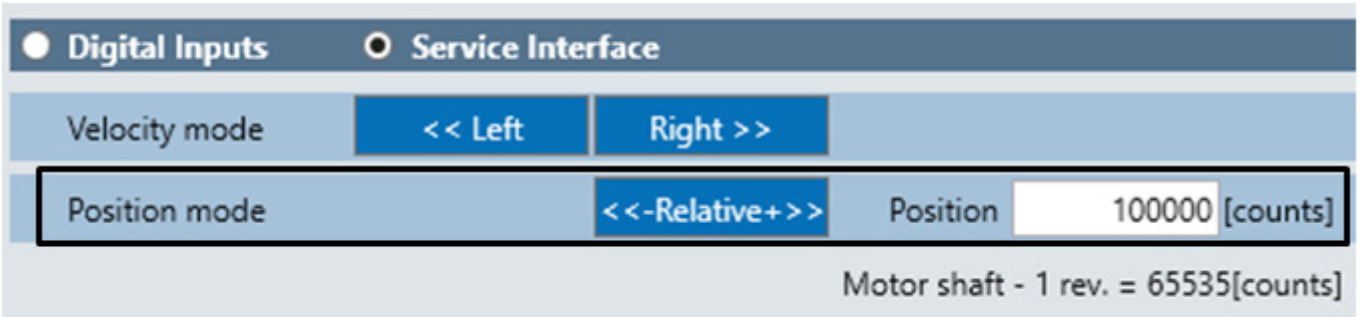

7. In position control mode, the motor is told to rotate a number of "counts". Each count is equal to 1/65535th of a revolution. The motor can accurately position itself within a few hundred counts of the target position. Enter the number of "counts" you would like the rotor to turn. Negative values will make the motor travel counterclockwise.
    - For example, if you were to enter "131070" (65535 x 2) then the rotor will rotate two revolutions clockwise and end up in the same position that it started.

8. Once you've entered the proper value, click the "-Relative+" button to make the motor position itself to your target value. You can check the true distance traveled by looking at the "Position[cnts]" value under the "Actual Values" section on the left.
    - The position control advances the motor relative to where it started right before the "-Relative+" button is pressed, but the position readout in "Actual Values" is an absolute position based off the location of the motor when it was last powered on, so the two values will almost never be equal. The difference in the absolute position before and after the "-Relative+" button is pressed should be within a few hundred counts of the number that you entered.

Downloaded from Arrow.com.

Digital Input Mode

1. In digital input mode the motor is scanning its 4 digital inputs for binary commands. The response to these commands can be configured using driveSTUDIO. In order to change any parameters through driveSTUDIO, the motor must be disabled ("IN A" and "IN B", in the off position). This includes changing the control mode, so ensure all digital input switches are in the off position (middle).

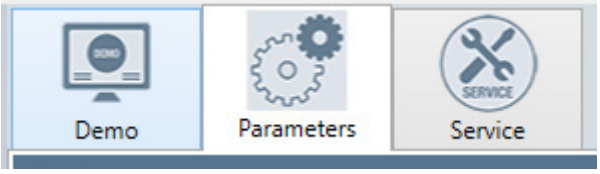

2. Click on the "Parameters" tab at the top of the screen. This is where all of the motor's configurable behaviors can be changed.

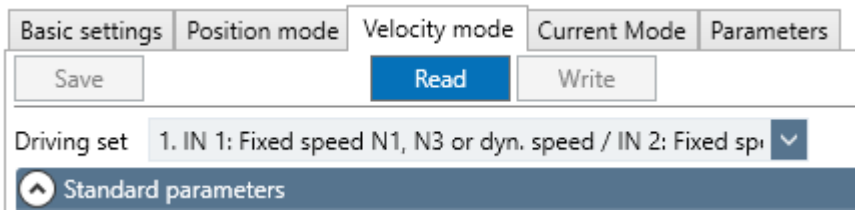

3. Click on the "Velocity mode" sub-tab toward the top of the screen. There is a "Read" button just below this tab that should be blue and clickable. If it is grayed out, then use the "communication" section on the left side of the screen to disconnect and reconnect the motor. Click on the "Read" button once it is active. This will read the current driving set and all of the parameters from the motor's volatile memory.

4. There is a "Driving set" drop down menu underneath the "Read" button. These driving set options determine the motor's response to the different digital input combinations. Click on the drop down menu and select the first option, which may already be selected. Make sure all the digital inputs on the Switch Box are off, then click "Write" next to the "Read" button. Now the motor has loaded the driving set into its volatile memory.

Downloaded from Arrow.com.

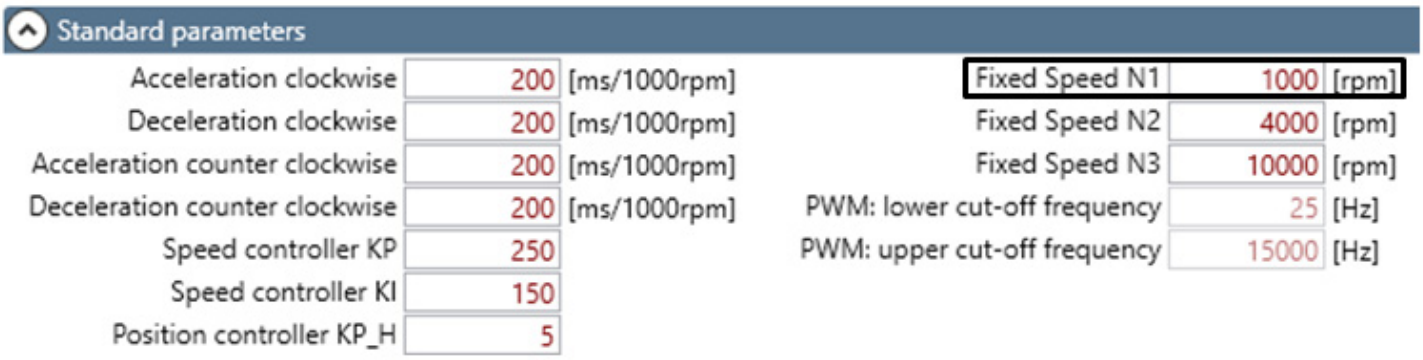

5. Turn on "IN 1" on the Switch Box. Turn on "IN A" to start clockwise rotation or "IN B" for counterclockwise rotation. The motor will be spinning at "Fixed Speed N1", a value that can be seen on the right side in the "Standard parameters" section. Use the following combinations for the different speed settings:
    - IN A: on, IN B: off, IN 1: on, IN2: off -> Fixed speed N1, clockwise
    - IN A: on, IN B: off, IN 1: off, IN2: on -> Fixed speed N2, clockwise
    - IN A: on, IN B: off, IN 1: on, IN2: on -> Fixed speed N3, clockwise
    - IN A: on, IN B: off, IN 1: off, IN2: off, 0-10V Analog Dial: rotated clockwise -> Variable speed depending on dial position, clockwise
    - Interchange IN A and IN B states in the combinations above for counterclockwise operation

6. If one of the speed parameters is too high the motor will not be able to reach it, but instead will spin as fast as it can. If the motor started running and then stopped suddenly, and doesn't respond afterward, you may have tripped a safety feature in both the power supply and the motor (see page 4 "Before Starting" note 2 for reset instructions). Follow the next step before attempting to turn on the motor again to prevent the safety feature from activating again. Follow the next step even if you did not trip the power supply safety feature.

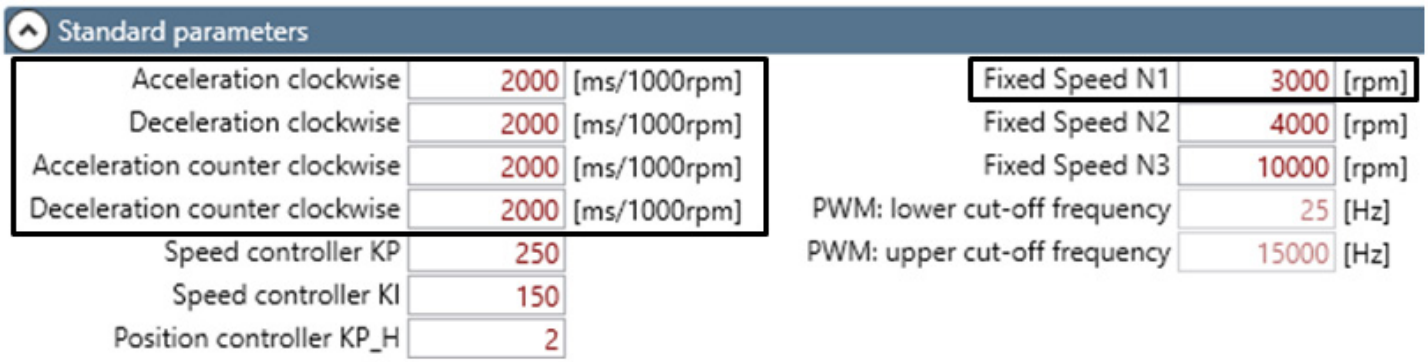

7. You can change the parameters to fit the behavior to your liking. Under the "Standard parameters" section, type in "3000" in "Fixed speed N1" and "2000" for all four of the acceleration/deceleration parameters then click the "Write" button. This will limit the motor to accelerate and decelerate at a maximum rate of 1000rpm per 2 seconds. Turn the motor on such that it spins at "Fixed speed N1" and notice how it takes significantly longer to reach the new target speed. After the motor is done accelerating you can check the "Velocity" value under the "Actual Values" section to confirm that the motor is now spinning at the new "Fixed speed N1" value.

8. Feel free to experiment with different parameters to tune the motor to the exact operating behavior that you need.

Please contact ebm-papst if you have any questions or concerns.

a. Go to our website (www.ebmpapst.us) and click on Contact
b. Email us at sales@us.ebmpapst.com with the subject header "K4 Dev Kit Question"

Downloaded from Arrow.com.

Motor Wiring References

K4 Wiring Table

	Wire color	Pin	Configuration	Function	Recommended AWG
Signal	white	1	D-IN-A	NPN 24 V	24
	brown	2	D-IN-B	NPN 24 V	
	green	3	D-IN-1	NPN 24 V	
	yellow	4	D-IN-2	NPN 24 V / analog 0 ... 10 V / brake	
	gray	5	D-OUT-1	PNP 24 V	
	pink	6	D-OUT-2	PNP 24 V	
	blue	7	D-OUT-3*	PNP 24 V	
	red	8	A-IN-1	0 ... 10 V (differential)	
	black	9	A-IN-GND	GND for analog IN 1 (differential)	
	violet	10	RS485 A (+)	Progr. bus	
	gray / pink	11	RS485 B (–)	Progr. bus	
	red / blue	12	U_{Logic}	Logic power supply (24 V)	
Power	gray	A	Ballast	Ballast resistor	16
	brown	B	U_{ZK}	Power supply	
	black	C	GND	Power / signal GND	

* Output (OUT 3) is only available on ECI-63.XX-K4

Motor connector pinout:

Terminal Number	Name	Function
1	D-IN-A	Digital Input A
2	D-IN-B	Digital Input B
3	D-IN-1	Digital Input 1
4	D-IN-2	Digital Input 2
5	D-OUT-1	Digital Output 1
6	D-OUT-2	Digital Output 2
7	D-OUT-3	Digital Output 3
8	A-IN-1	Analog Input
9	A-IN-GND	Analog Ground

Terminal Number	Name	Function
10	RS485 A	RS485 positive
11	RS485 B	RS485 negative
12	ULogic	Motor Logic Voltage
13	Not Used	--
14	UZK	Motor Power Voltage
15	GND	Power/Logic Ground
16	Not Used	--
17	Not Used	--
18	Not Used	--

Downloaded from Arrow.com.

Switch Box Specification

Motor Supply (Power Input Terminals)

Connection Terminal	Input range possible for internal +24 VDC DC/DC converter.	Typical range for 24 VDC Motors (Must follow motor specification)	Typical range for 48 VDC Motors (Must follow motor specification)
Red Terminal	18-75 VDC	18-30 VDC	18-53 VDC
Black Terminal	GND	GND	GND

Motor Fuse

Description	Manufacturer	Part Number
8 Amp, 5mm x 20 mm, Slow-blow	Schurter Inc.	34.3126

Logic Fuse (DC/DC Converter Input)

Description	Manufacturer	Part Number
0.75 Amp, 5mm x 20 mm, Slow-blow	Bel Fuse Inc.	5TT 750-R

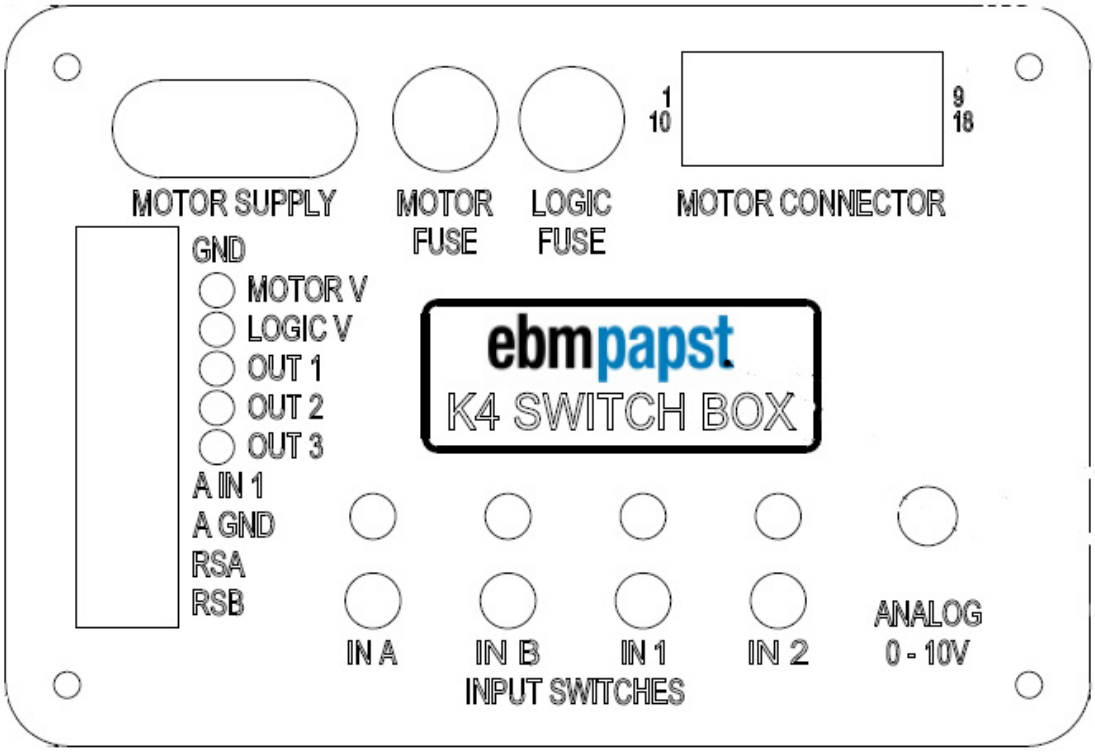

Downloaded from Arrow.com.

Motor Connector				(Signal Monitor Terminal Block)			Input Switches (Toggle Switch, LEDs & Potentiometer		
PIN Number & Motor Signal Name	Signal State/Definition	Electrical Output to Motor	Electrical Input from Motor	Monitor Terminal Block Name	Monitor Terminal Block Signal Electrical Output	Monitor Terminal Block	Switch/ Pot. Position	Switch/Pot. Position	Switch LED Status
1) IN A	Active Output to Motor	24 VDC	-	-	-	-	IN A	UP or Momentary Down (signal source)	ON
	Inactive Output to Motor	0 VDC	-					Center	OFF
2) IN B	Active Output to Motor	24 VDC	-	-	-	-	IN B	UP or Momentary Down (signal source)	ON
	Inactive Output to Motor	0 VDC	-					Center	OFF
3) IN 1	Active Output to Motor	24 VDC	-	-	-	-	IN 1	UP or Momentary Down (signal source)	ON
	Inactive Output to Motor	0 VDC	-					Center	OFF
4) IN 2	Active Output to Motor	24 VDC	-	-	-	-	IN 2	UP or Momentary Down (signal source)	ON
	Inactive Output to Motor	0 VDC	-					Center	OFF
5) OUT 1	Active Input from Motor	-	24 VDC	OUT 1 (monitor)	Diode backdrive protected output. Requires Load Resistor (10K Typ.)	ON	-	-	-
	Inactive Input from Motor	-	0 VDC			Off			
6) OUT 2	Active Input from Motor	-	24 VDC	OUT 2 (monitor)	Diode backdrive protected output. Requires Load Resistor (10K Typ.)	ON	-	-	-
	Inactive Input from Motor	-	0 VDC			Off			
7) OUT 3	Active Input from Motor	-	24 VDC	OUT 3 (monitor)	Diode backdrive protected output. Requires Load Resistor (10K Typ.)	ON	-	-	-
	Inactive Input from Motor	0 VDC	0 VDC			Off			
8) ANALOG IN 1	Analog Speed Control Out to Motor	0-10 VDC @ 1K Ohms output impenance	-	A IN 1 (monitor)	0-10 VDC @ 1K Ohms output impenance. Same as actual signal to motor	-	ANALOG 0-10V	Full CCW = 0 VDC Full CW = 10 VDC (signal source)	-
9) ANALOG GND	Analog Speed GND	0 VDC (GND)	-	A GND (reference)	0 VDC (GND)	-	-	-	-
10) RS-485+	RS-485+ Programming bus	-	-	RSA (Ext. Connect)	External bus connection through to motor	-	-	-	-
11) RS-485-	RS-485- Programming bus	-	-	RSB (Ext. Connect)	External bus connection through to motor	-	-	-	-
12) "Logic Supply" (Ulogic)	Power Out to Motor Logic	+24 VDC +/-2% @ 250 mA Max current. Motor Supply input range (18-75 VDC)		LOGIC V (monitor)	+24 VDC +/-2% @ 100 mA Max current.	Present = ON	-	-	-
13) Not used	-	-	-	-	-	-	-	-	-
14) "Motor Power" (Uzk)	Power Out to Motor Drive Electronics	Fused @ 8 Amps from Motor Supply Terminals	-	MOTOR V (monitor)	1.0 Amps Max Output current	Present = ON	-	-	-
15) "GND"	GND for both "Motor Power" (Pin 14) and +24 VDC "Logic Supply" (Pin 12).	8 Amps max. from Motor Supply Terminals	-	GND (reference)	1.0 Amps Max return current	-	-	-	-
16) Not used	-	-	-	-	-	-	-	-	-
17) Not used	-	-	-	-	-	-	-	-	-
18) Not used	-	-	-	-	-	-	-	-	-

Downloaded from Arrow.com.

Printed in the USA - K4DSDK1219

For more information, please scan the QR codes below
or visit our website: **www.ebmpapst.us**

ebmpapst

the engineer's choice

K4 Motor selection

driveSTUDIO

KickStart

ebm-papst Inc. North America

USA
100 Hyde Road
Farmington, CT 06034
Phone + 1 860-674-1515
Fax + 1 860-674-8536
sales@us.ebmpapst.com

Canada
Oshawa Executive Centre
419 King Street West
Oshawa, ON
Suite 603A
L1J 2K5
Phone: (905) 420-3533
Fax: (905) 420-3772
sales@ca.ebmpapst.com

Mexico
Paseo de Tamarindos
400-A-5o Piso
Col Bosques de las Lomas
Mexico 05120 DF
Phone: +52 55 3300-5144
Fax: +52 55 3300-5243
sales@mx.ebmpapst.com

© ebm-papst Inc. 2019
ebm-papst Inc. reserves the right to change any specifications or data without notice.

Downloaded from Arrow.com.