Downloaded from Arrow.com.

M 32EN11-6

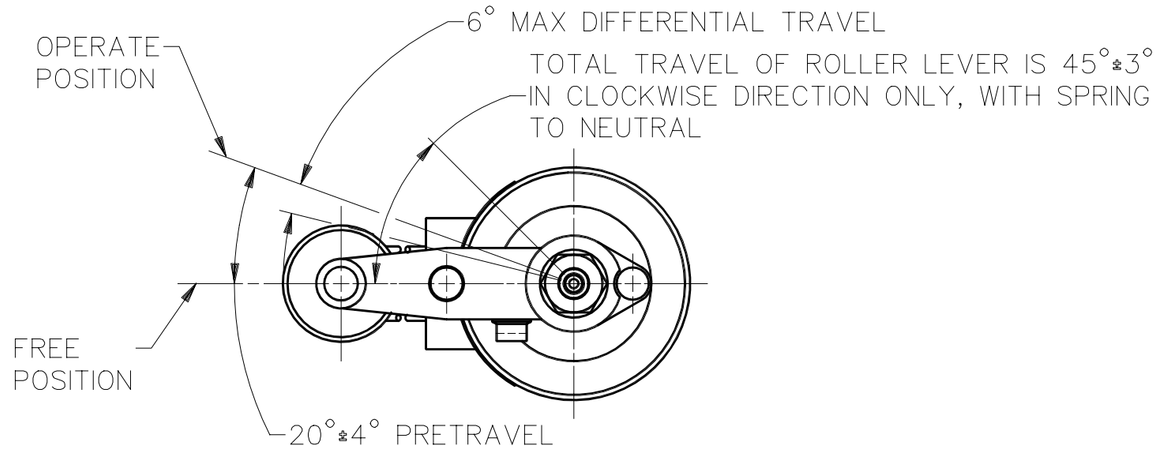

CHARACTERISTICS

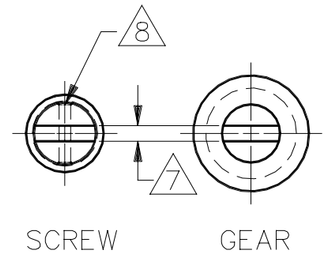

ROLLER LEVER MAY BE ADJUSTED FOR AN INFINITE NUMBER OF POSITIONS THRU 360°. ADJUSTMENT IS MADE BY LOOSENING THE LOCK NUT AND THEN THE SCREW AND TURNING GEAR UNTIL LEVER IS IN DESIRED POSITION. SCREW AND LOCK NUT ON SHAFT IS THEN TIGHTENED TO POSITIVELY LOCK LEVER IN POSITION.

LEVER ADJUSTMENT DETAIL
SCALE 2:1

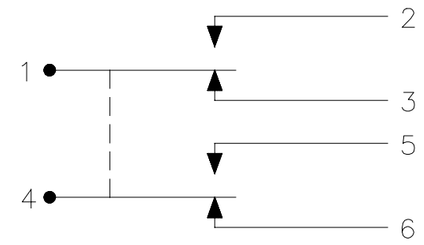

CIRCUIT DIAGRAM

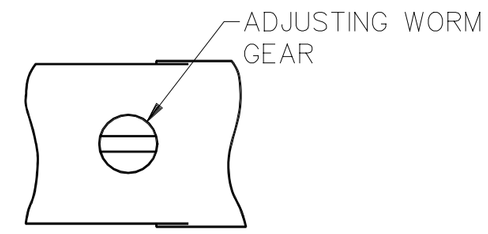

VIEW A–A
SCALE 2:1

NOTES
1 – CORROSION RESISTANT STEEL ENCLOSURE
2 – SWITCH SEALED PER MIL–S–8805, SYMBOL 4
3 CORROSION RESISTANT STEEL SHAFT, BUSHING AND PINS
4 DO NOT APPLY MORE THAN 20–25 INCH–POUNDS OF TORQUE WHEN TIGHTENING LOCKING NUT
5 CIRCUIT DIAGRAM, CATALOG LISTING AND MILITARY STANDARD NO. MS 21320–3 ARE SHOWN ON NAMEPLATE
6 HARDWARE MAY BE PACKAGED UNASSEMBLED PER MIL–S–8805
7 .050 WIDE X .050 DEEP SLOT
8 Ø.037 HOLE FOR WIRE LOCKING
9 6X NO 18 LEAD WIRE IN ACCORDANCE WITH SPEC MIL–W–22759/7 PERMANENTLY MARKED AT 3" INTERVALS OR LESS WITH SWITCH CIRCUIT IDENTIFICATION NUMBER FOLLOWED BY WIRE GAUGE NO (1–18, 2–18 ETC)

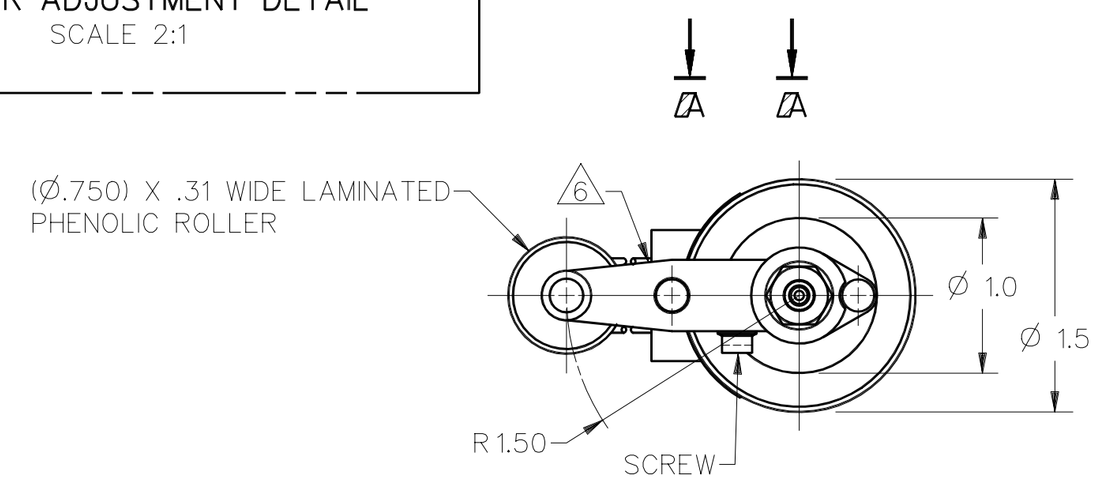

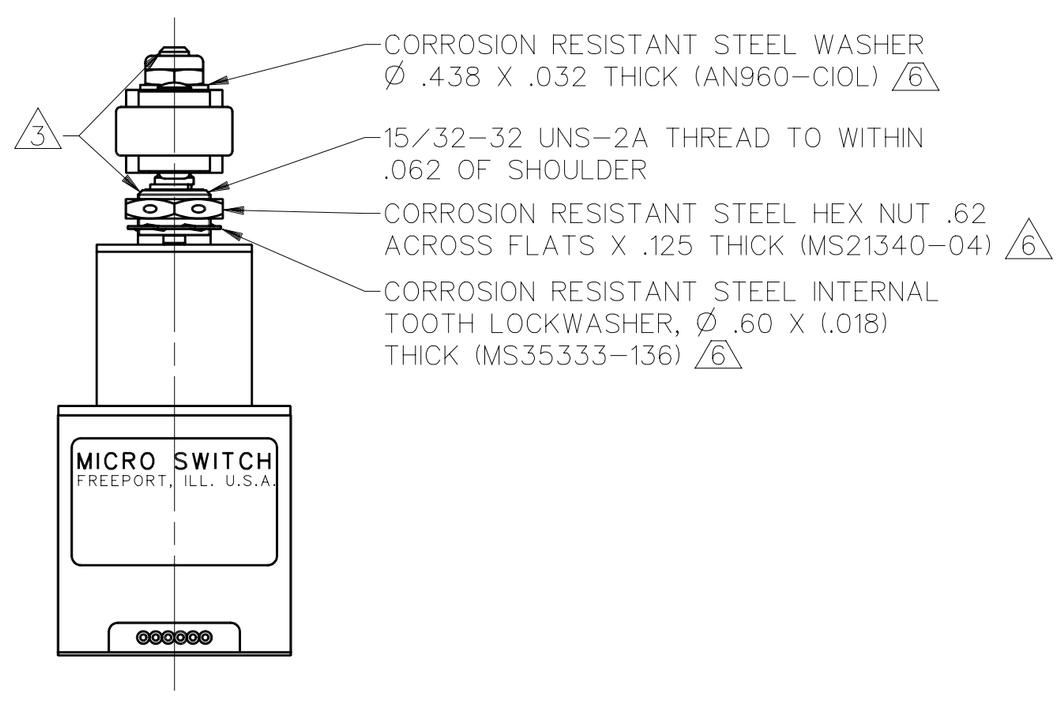

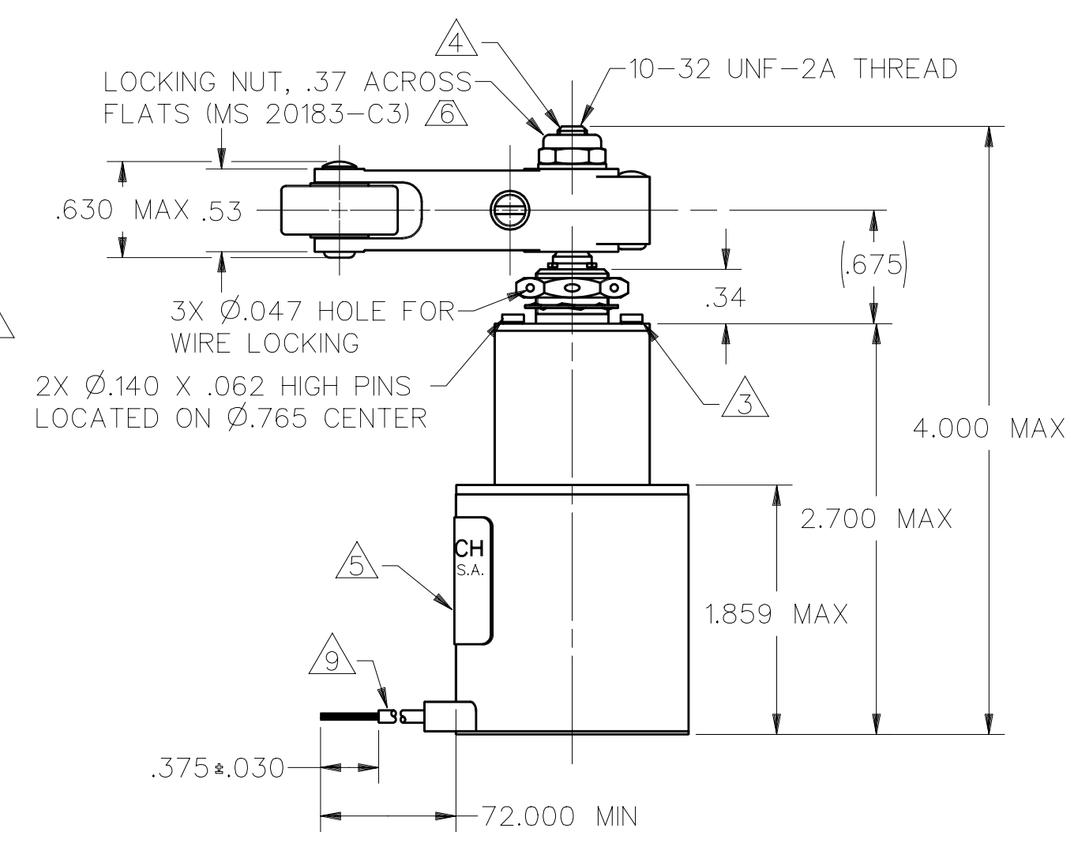

CHARACTERISTICS			ELECTRICAL DATA		
OPERATING TORQUE	12–25 IN LB		CONTACT ARRANGEMENT (SEE CIRCUIT DIAGRAM)		
RELEASE TORQUE	4 IN LB MIN		28 VDC		
PRETRAVEL	SEE DETAIL		LOAD	SEA LEVEL	50,000 FT
DIFFERENTIAL TRAVEL	SEE DETAIL		RES	10	10
OVERTRAVEL	SEE DETAIL		IND	6	3
FREE POSITION	SEE DETAIL		MOTOR	6	
FULL OVERTRAVEL TORQUE	40 IN–LB MAX				

MASTER REDUCED
ANSI Y14.5M–1982 APPLIES

THIS DRAWING COVERS A PROPRIETARY ITEM AND IS THE PROPERTY OF MICRO SWITCH. A DIVISION OF HONEYWELL. THIS DRAWING IS NOT TO BE COPIED OR USED WITHOUT THE APPROVAL OF MICRO SWITCH.

MICRO SWITCH a Honeywell Division
FED. MFG. CODE 91929

SWITCH–ENCLOSED

CATALOG LISTING
32EN11–6

MILITARY STD PART NUMBER
MS 21320–3

THIRD ANGLE PROJECTION
SCALE FULL
DO NOT SCALE PRINT

UNLESS OTHERWISE SPECIFIED TOLERANCES ARE

ONE PLACE	(.0)	±.030
TWO PLACES	(.00)	±.015
THREE PLACES	(.000)	±.005
ANGLES		±

WEIGHT 15.5 OZ

M 32EN11–6
RELEASE NO. SR5371
REPLACES
DRAWING NUMBER
ISSUE 30
CHECK
REVISIONS
A CO 76965 G R T 9 DEC 93
B CO–78255 MAM 31 AUG 94
CHECK
CHECK
CHECK
DDM/CAD
DRAWN
G R T 7 DEC 93