CF4380-000 Product Details

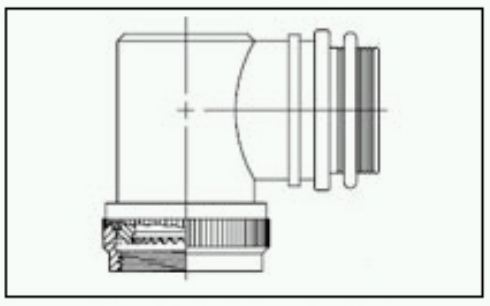

CF4380-000

TE Part Number: CF4380-000

Active

Add to Part List

Braid, Fixed, Spin and Tinel Lock Adapters

Always EU RoHS/ELV Compliant (Statement of Compliance)

Product Highlights:

- Style = Tinel Lock
- Connector Code = 40
- 90°
- Shell Size = 11, B
- Entry Size = 8

View all Features | Find Similar Products

Quick Links

- Check Pricing & Availability
- Search for Tooling
- Product Feature Selector
- Contact Us About This Product

Documentation & Additional Information

Product Drawings:

- Tinel-Lock Adapter (PDF, English)

Catalog Pages/Data Sheets:

- None Available

Product Specifications:

- None Available

Application Specifications:

- None Available

Instruction Sheets:

- None Available

CAD Files:

- None Available

List all Documents

Additional Information:

- Product Line Information

Related Products:

- Tooling

Product Features (Please use the Product Drawing for all design activity)

Product Type Features:

- Style = Tinel Lock
- Shell Size = 11, B
- Material = Stainless Steel
- Finish = Passivated

Electrical Characteristics:

- Angle = 90°
- Entry Size = 8
- Boot Diameter (mm [in]) = 20.32 [0.800]
- Entry Diameter (mm [in]) = 12.70 [0.500]
- Finish Code = J

Body Related Features:

- Connector Code = 40
- Cable Diameter (Max.) (mm [in]) = 12.19 [0.480]

Configuration Related Features:

- Braid = Single 36 AWG Braid
- Material Code = S

Industry Standards:

- RoHS/ELV Compliance = RoHS compliant, ELV compliant
- Lead Free Solder Processes = Not relevant for lead free process
- RoHS/ELV Compliance History = Always was RoHS compliant

Other:

- Brand = Raychem

© 2008 Tyco Electronics Corporation All Rights Reserved

Downloaded from Arrow.com.