FEMALE PNP PLUG M12 90° ANGLED TO MALE PLUG M12 STRAIGHT

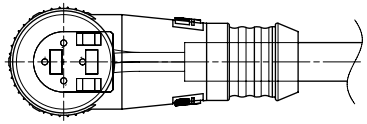

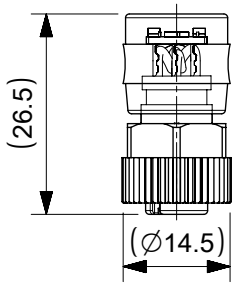

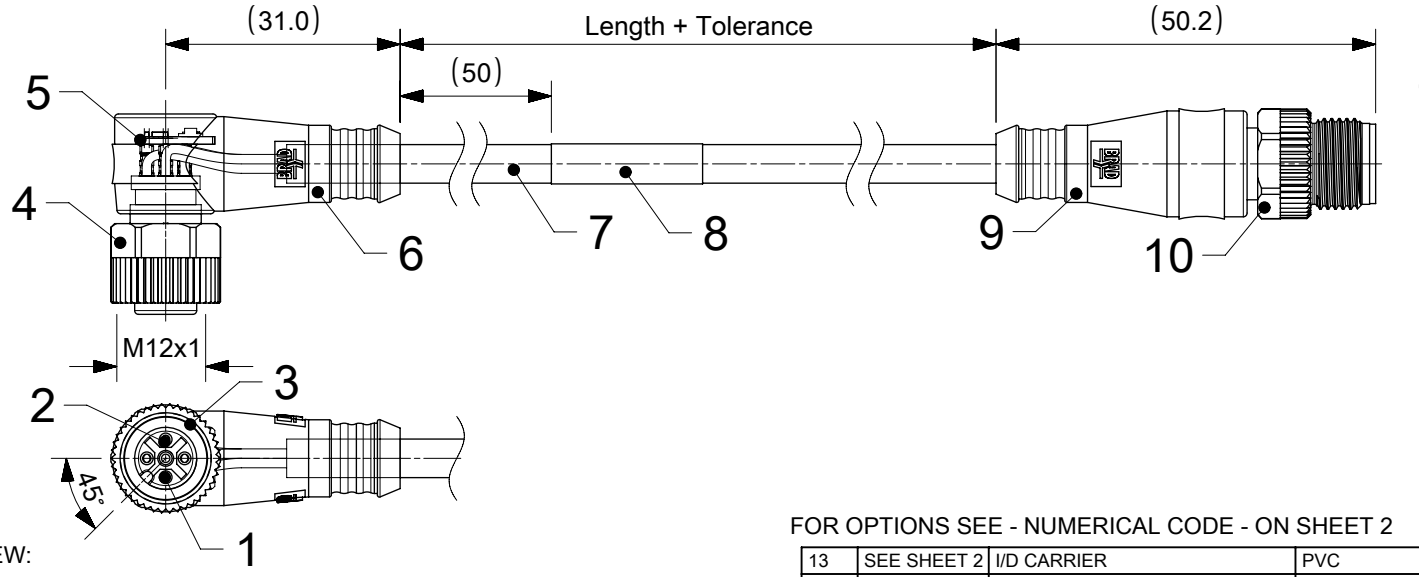

CONTACTS POSITION FRONT VIEW:

	4 CONTACTS
FEMALE	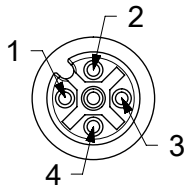
MALE	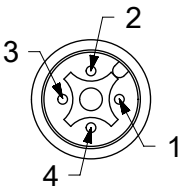

CONNECTIONS	PIN	WIRE
	1	BROWN
	2	WHITE
	3	BLUE
	4	BLACK

CODING ACCORDING TO IEC 61076-2-101

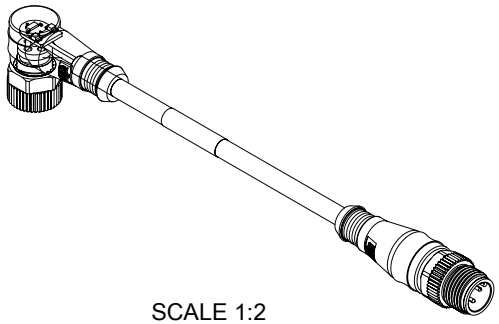

SCALE 1:2

WIRING DIAGRAM

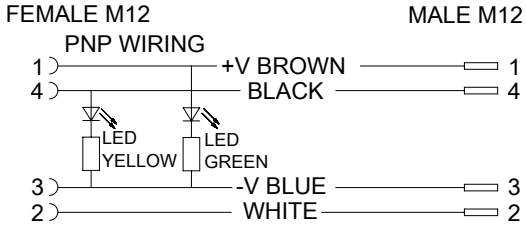

FOR OPTIONS SEE - NUMERICAL CODE - ON SHEET 2

ITEM	QTY.	DESCRIPTION	MATERIAL	FINISH
13	SEE SHEET 2	I/D CARRIER	PVC	TRANSPARENT
12	1	INSERT 4P MALE BLACK	TPU	---
11	4	CONTACT M12 MALE	COPPER	SELECTIVE GOLD OVER NICKEL
10	1	COUPLING NUT MALE SW13	SEE SHEET 2	SEE SHEET 2
9	-	OVERMOULDING BLACK	TPU	---
8	1	LABEL YELLOW	VINYL	---
7	-	CABLE	SEE SHEET 2	---
6	-	OVERMOULDING TRANSPARENT	TPU	---
5	1	PCB PNP	---	---
4	1	COUPLING NUT FEMALE SW13	SEE SHEET 2	SEE SHEET 2
3	1	ORING RED	FPM	---
2	1	INSERT 4P FEMALE BLACK	PUR	---
1	4	CONTACT M12 FEMALE	BRONZE	SELECTIVE GOLD OVER NICKEL

DOCUMENT STATUS	P1	RELEASE DATE	2019/11/12 07:55:56

THIS DRAWING CONTAINS INFORMATION THAT IS PROPRIETARY TO MOLEX ELECTRONIC TECHNOLOGIES, LLC AND SHOULD NOT BE USED WITHOUT WRITTEN PERMISSION

SYMBOLS	DIMENSION UNITS	SCALE
= 0	mm	1:1

GENERAL TOLERANCES (UNLESS SPECIFIED)

ANGULAR TOL	±	1.0 °
4 PLACES	±	
3 PLACES	±	
2 PLACES	±	0.05
1 PLACE	±	0.3
0 PLACES	±	0.5

DRAFT WHERE APPLICABLE MUST REMAIN WITHIN DIMENSIONS

CURRENT REV DESC:

EC NO: 627217
DRWN: MDHARMANTI 2019/10/18
CHK'D: RSILLER 2019/11/12
APPR: RSILLER 2019/11/12

INITIAL REVISION:
DRWN: JMARSZALEK 2016/09/15
APPR: RSILLER 2016/10/04

THIRD ANGLE PROJECTION | DRAWING: A4-SIZE | SERIES: 120067

molex

CSE M12 PNP 4P AC FE RA WSOR MA STR XM

PRODUCT CUSTOMER DRAWING

DOCUMENT NUMBER	DOC TYPE	DOC PART	REVISION
1200678420	PSD	000	A3

MATERIAL NUMBER	CUSTOMER	SHEET NUMBER
SEE SHEET 2	GENERAL MARKET	1 OF 2

Downloaded from Arrow.com.

ENGINEERING NO. - NUMERICAL CODE (Available parts see PART LIST table. Other parts available upon request).

OPTIONS

8	8	4	0	P	7	B	X	X	M	X	X	X	X

- 88=M12x1 Double ended Micro-Change
- Contacts: 4=4 Contacts
- Heads style: 0P7=Plug Female PNP 90° to Plug Male Straight
- Cable type: See Table
- Units: M=Meter
- Length Examples: 005=0.5 units, 010=1 units, 100=10 units
- Overmold color: Blank (Standard)=Black, Y=Yellow
- Coupling Nut: Blank (Standard)=Knurled/Hex Brass, Ni Plated; 7=Knurled Brass Ni Plated, Teflon Coated
- H= 2 pcs. of I/D Carrier PVC Transparent (Cables B36 always with 2 pcs. I/D Carrier)

COUPLING NUTS

FEMALE MALE

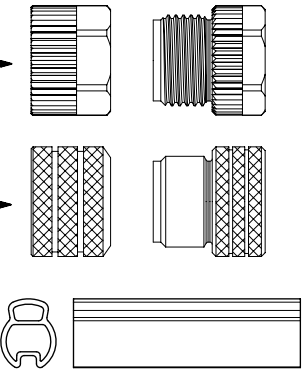

CABLE INFORMATION (for more information see Cable Data Sheet).

CABLE TYPE	NO. OF WIRES	CROSS SECTION	CABLE JACKET	UL	CSA	STATIC: TEMP. / BENDING RADIUS	DYNAMIC: TEMP. / BENDING RADIUS	DRAG CHAIN: TEMP. / BENDING RADIUS	DRAG CHAIN	CABLE PRODUCT SPECIFICATION	CABLE SPEC. DRAWING	OTHER INFORMATION
B30	4	0.34mm²	TPU Based, Black	UL 21215/758	C22.2 I/II A/B 80°/600V	-40°C to +90°C >5xO.D.	-25°C to +80°C >7.5xO.D.	-5°C to +60°C >7.5xO.D.	up to 5 000 000 cycles at temp 20°C	1552200001	SD-120209-001	WSOR
B36	4	0.34mm²	TPU Based, Orange									

PART LIST

No.	Molex P/N	Engineering no.	Cable Length (mm)
1	1200678420	8840P7B30M010	1000
2	1200678421	8840P7B30M020	2000
3	1200678422	8840P7B30M050	5000
4	1200678427	8840P7B30M100	10000
5	1200678477	8840P7B30M030	3000
6	1200678479	8840P7B36M0207Y	2000
7	1200678487	8840P7B30M0067	600
8	1200678488	8840P7B30M0207	2000
9	1200678496	8840P7B36M0107Y	1000
10	1200678497	8840P7B36M0307Y	3000
11	1200678498	8840P7B36M0507Y	5000
12	1200678499	8840P7B36M1007Y	10000
13	1200678500	8840P7B36M1507Y	15000
14	1200678501	8840P7B36M2007Y	20000
15	1200678511	8840P7B30M006	600
16	1200678512	8840P7B30M015	1500
17	1200678532	8840P7B36M0067Y	600
18	1200678538	8840P7B36M0257H	2500
19	1200678521	8840P7B36M0107H	1000
20	1200678522	8840P7B36M0207H	2000

No.	Molex P/N	Engineering no.	Cable Length (mm)
21	1200678523	8840P7B36M0307H	3000
22	1200678524	8840P7B36M0057H	500
23	1200678525	8840P7B36M0157H	1500
24	1200678526	8840P7B36M0507H	5000
25	1200678527	8840P7B36M1007H	10000
26			
27			
28			
29			
30			
31			
32			
33			
34			
35			
36			
37			
38			
39			
40			

NOTES:

CURRENT RATING: 4A

VOLTAGE RATING: 10 - 30 VDC

PROTECTION CLASS: IP 67

TEMPERATURE: -25°C / +85°C

CABLE LENGTH TOLERANCES

LENGTH	TOLERANCE
0m-1m	+40 mm
>1m-5m	+60 mm
>5m-10m	+80 mm
>10m-20m	+140 mm
>20m-30m	+160 mm
>30m	+1% length

DOCUMENT STATUS	P1	RELEASE DATE	2019/11/12 07:55:56

THIS DRAWING CONTAINS INFORMATION THAT IS PROPRIETARY TO MOLEX ELECTRONIC TECHNOLOGIES, LLC AND SHOULD NOT BE USED WITHOUT WRITTEN PERMISSION

SYMBOLS: A = 0; E = 0; F = 0; S = 0; ▼ = 0; C = 0; ☒ = 0; ■ = 0; ▽ = 0

DIMENSION UNITS: mm | SCALE: 1:1

GENERAL TOLERANCES (UNLESS SPECIFIED)

ANGULAR TOL	± 1.0 °
4 PLACES	±
3 PLACES	±
2 PLACES	± 0.05
1 PLACE	± 0.3
0 PLACES	± 0.5

DRAFT WHERE APPLICABLE MUST REMAIN WITHIN DIMENSIONS

CURRENT REV DESC:

EC NO: 627217

DRWN: MDHARMANTI 2019/10/18

CHK'D: RSILLER 2019/11/12

APPR: RSILLER 2019/11/12

INITIAL REVISION:

DRWN: JMARSZALEK 2016/09/15

APPR: RSILLER 2016/10/04

THIRD ANGLE PROJECTION | DRAWING: A4-SIZE | SERIES: 120067

molex

CSE M12 PNP 4P AC FE RA WSOR MA STR XM

PRODUCT CUSTOMER DRAWING

DOCUMENT NUMBER	DOC TYPE	DOC PART	REVISION
1200678420	PSD	000	A3

MATERIAL NUMBER	CUSTOMER	SHEET NUMBER
SEE PART LIST	GENERAL MARKET	2 OF 2

Downloaded from Arrow.com.