Dec.1.2020 Copyright 2020 HIROSE ELECTRIC CO., LTD. All Rights Reserved.
In case of consideration for using Automotive equipment / device which demand high reliability, kindly contact our sales window

	COUNT	DESCRIPTION OF REVISIONS	BY	CHKD	DATE		COUNT	DESCRIPTION OF REVISIONS	BY	CHKD	DATE
△1	1	DIS-P-000739	KUDO	OIZUMI	14. 7. 1	△					. .
△2	3	DIS-P-00000896	HOSHINO	TOKUTA	20. 9. 11	△					. .
△					. .	△					. .

△1 CHANGED THE POSITION OF LOT No.

HRS DRAWING FOR REFERENCE

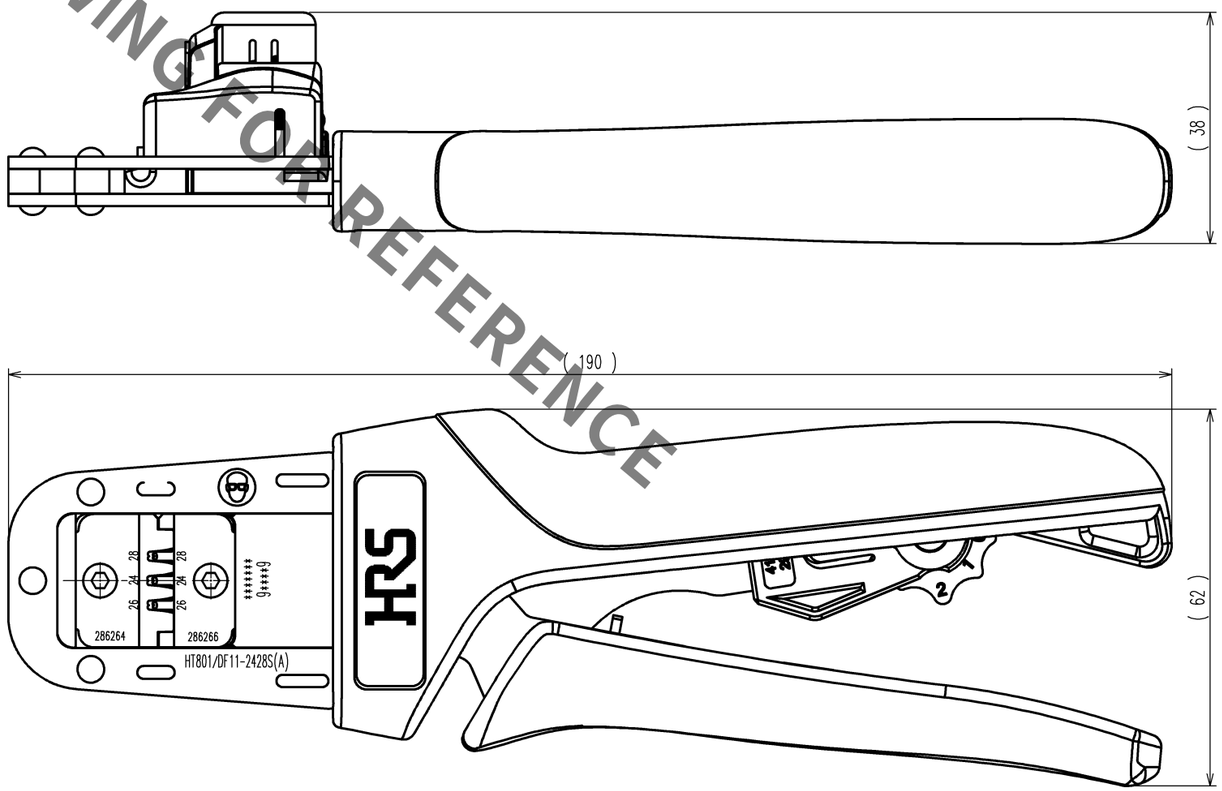

△2 CHANGED PRODUCT NAME DISPLAY

△2 Notes : Contact of DF11-2428SC(CL0543-0501-5) and DF11-2428SCA(CL0543-0551-3)
DF51K-2428SC(800)(CL0480-0584-0) , DF51K-2428SCA(800)(CL0480-0615-0) is assembled for this tool.

TO
PE

2			4		
1			3		
NO.	MATERIAL	FINISH, REMARKS	NO.	MATERIAL	FINISH, REMARKS

CODE NO.(OLD)	DRAWN	DESIGNED	CHECKED	APPROVED	RELEASED
CL	K.KIMURA 13.2.15	K.KIMURA 13.2.15	S.OIZUMI 13.2.16	T.ITO 13.2.16	. .

SCALE	DRAWING NO.	PART NO.
1 : 1	EDC-276273-00-00	△2 HT801/DF11-2428S(A)
UNITS mm	HRS HIROSE ELECTRIC CO., LTD	CODE NO. CL550-0403-4 1/1

Downloaded from Arrow.com.