2.5V to 5.5V, 0.3A 1ch Synchronous Buck Converter with Integrated FET

BD9122GUL

General Description

The BD9122GUL is ROHM's high efficiency step-down switching regulator designed to produce a voltage as low as 1V from a supply voltage of 3.3V or 5V. It offers high efficiency by using pulse skip control technology and synchronous switches, and provides faster transient response to sudden load changes by implementing current mode control.

Features

- Fast Transient Response because of Current Mode Control System.
- High Efficiency for All Load Ranges because of Synchronous Rectifier (Nch and Pch FET) and SLLM™(Simple Light Load Mode).
- Soft-Start Function.
- Thermal Shutdown and UVLO Functions
- Short-Circuit Protection with Time Delay Function Shutdown Function.

Applications

Power Supply for LSI including DSP, Microcomputer and ASIC

Key Specifications

■ Input Voltage Range:	2.5V to 5.5V
■ Output Voltage Range:	1.0V to 2.0V
■ Output Current:	0.3A (Max)
■ Switching Frequency:	1MHz(Typ)
■ Pch FET ON Resistance:	0.3Ω(Typ)
■ Nch FET ON Resistance:	0.2Ω(Typ)
■ Standby Current:	0μA (Typ)
■ Operating Temperature Range:	-25°C to +85°C

Package

	W(Typ) x D(Typ) x H(Max)
VCSP50L2:	2.50mm x 1.10mm x 0.55mm

Typical Application Circuit

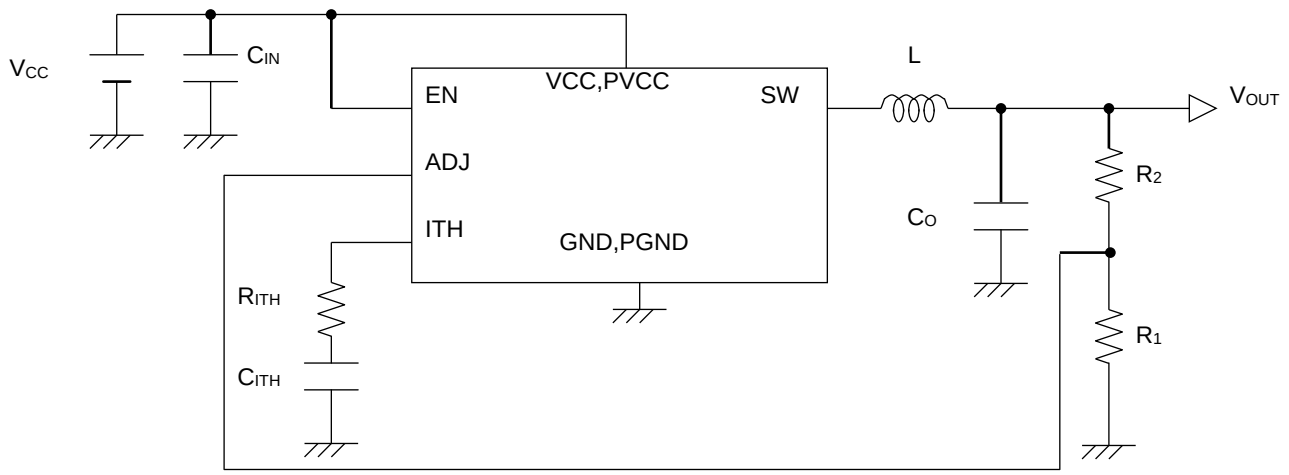

Figure 1. Typical Application Circuit

○Product structure : Silicon monolithic integrated circuit ○This product has no designed protection against radioactive rays

© 2012 ROHM Co., Ltd. All rights reserved.

Downloaded from Arrow.com.

Pin Configuration

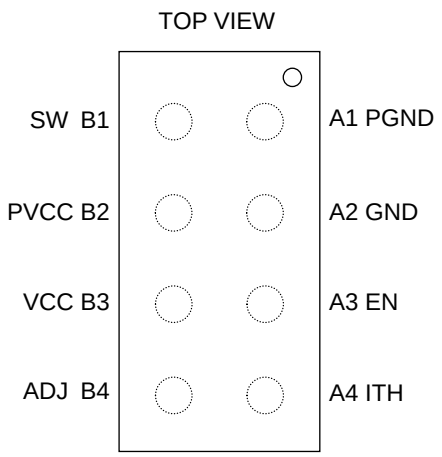

Figure 2. Pin Configuration

Pin Description

Pin No.	Pin Name	Pin Function
A1	PGND	Power switch ground pin
A2	GND	Ground pin
A3	EN	Enable pin（Active High）
A4	ITH	Gm Amp output pin/connected phase compensation capacitor
B1	SW	Power switch node
B2	PVCC	Power switch supply pin
B3	VCC	VCC power supply input pin
B4	ADJ	Output voltage detect pin

Block Diagram

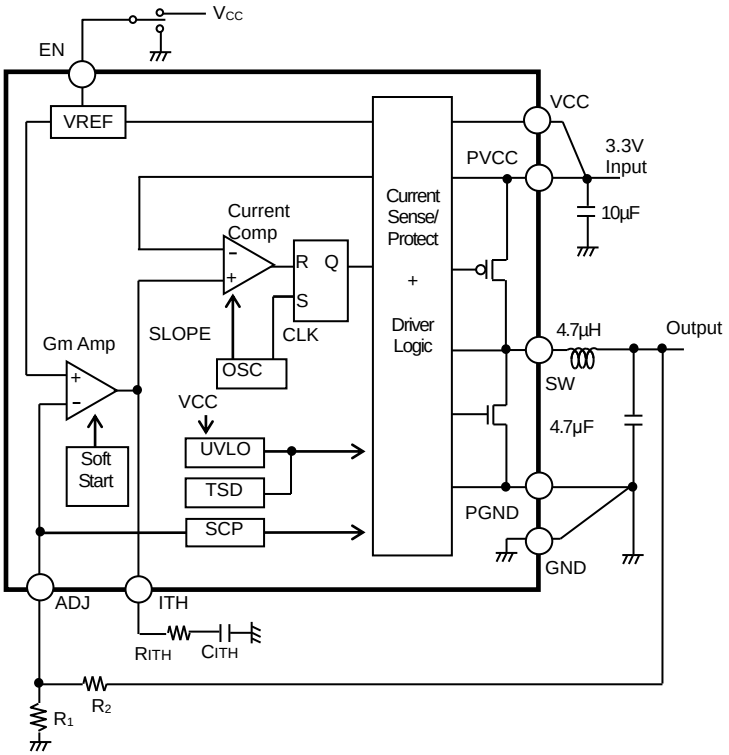

Figure 3. Block Diagram

© 2012 ROHM Co., Ltd. All rights reserved.

Downloaded from Arrow.com.

Absolute Maximum Ratings (Ta=25°C)

Parameter	Symbol	Limit	Unit
VCC Voltage	V_{CC}	-0.3 to +7 (Note 1)	V
PVCC Voltage	PV_{CC}	-0.3 to +7 (Note 1)	V
EN Voltage	V_{EN}	-0.3 to +7	V
SW,ITH Voltage	V_{SW},V_{ITH}	-0.3 to +7	V
Power Dissipation	Pd	0.66 (Note 2)	W
Operating Temperature Range	Topr	-25 to +85	°C
Storage Temperature Range	Tstg	-55 to +150	°C
Maximum Junction Temperature	Tjmax	+150	°C

(Note 1) Pd should not be exceeded.
(Note 2) Reduce by 5.28mW/°C for temperatures above Ta=25°C. (Mounted on 50mmx58mmx1.6mm Glass Epoxy PCB).
Caution: Operating the IC over the absolute maximum ratings may damage the IC. The damage can either be a short circuit between pins or an open circuit between pins and the internal circuitry. Therefore, it is important to consider circuit protection measures, such as adding a fuse, in case the IC is operated over the absolute maximum ratings.

Recommended Operating Conditions (Ta=25°C)

Parameter	Symbol	Limit			Unit
		Min	Typ	Max	
VCC Voltage	V_{CC} (Note 3)	2.5 (Note 4)	3.3	5.5	V
PVCC Voltage	PV_{CC}(Note 3)	2.5 (Note 4)	3.3	5.5	V
EN Voltage	V_{EN}	0	-	V_{CC}	V
SW Average Output	I_{sw} (Note 3)	-	-	0.3	A
Output Voltage Setting Range	V_{OUT}	1.0	-	2.0	V

(Note 3) Pd should not be exceeded.
(Note 4) In case set output voltage is 1.8V or more, V_{CCMin} = 2.7V.

Electrical Characteristics (Ta=25°C, V_{CC}=PV_{CC}=3.3V, V_{EN}=V_{CC}, R_1=20kΩ, R_2=10kΩ, unless otherwise specified.)

Parameter	Symbol	Limit			Unit	Conditions
		Min	Typ	Max		
Standby Current	I_{STB}	-	0	10	μA	EN=GND
Bias Current	I_{CC}	-	250	400	μA	
EN Low Voltage	V_{ENL}	-	GND	0.8	V	Standby mode
EN High Voltage	V_{ENH}	2.0	V_{CC}	-	V	Active mode
EN Input Current	I_{EN}	-	1	10	μA	V_{EN}=3.3V
Oscillation Frequency	f_{OSC}	0.8	1	1.2	MHz	
Pch FET ON Resistance	R_{ONP}	-	0.3	0.6	Ω	PV_{CC}=3.3V
Nch FET ON Resistance	R_{ONN}	-	0.2	0.5	Ω	PV_{CC}=3.3V
ADJ Voltage	V_{ADJ}	0.780	0.800	0.820	V	
Output Voltage	V_{OUT}	-	1.200	-	V	
ITH Sink Current	I_{THSI}	10	20	-	μA	V_{ADJ}=1.0V
ITH Source Current	I_{THSO}	10	20	-	μA	V_{ADJ}=0.6V
UVLO Threshold Voltage	V_{UVLO1}	2.2	2.3	2.4	V	V_{CC}=3V to 0V
UVLO Release Voltage	V_{UVLO2}	2.22	2.35	2.5	V	V_{CC}=0V to 3V
Soft Start Time	t_{SS}	0.5	1	2	ms	
Timer Latch Time	t_{LATCH}	1	2	4	ms	SCP/TSD operated
Output Short Circuit Threshold Voltage	V_{SCP}	-	V_{OUT}x0.5	-	V	V_{OUT}=2V to 0V

© 2012 ROHM Co., Ltd. All rights reserved.

Downloaded from Arrow.com.

Typical Performance Curves

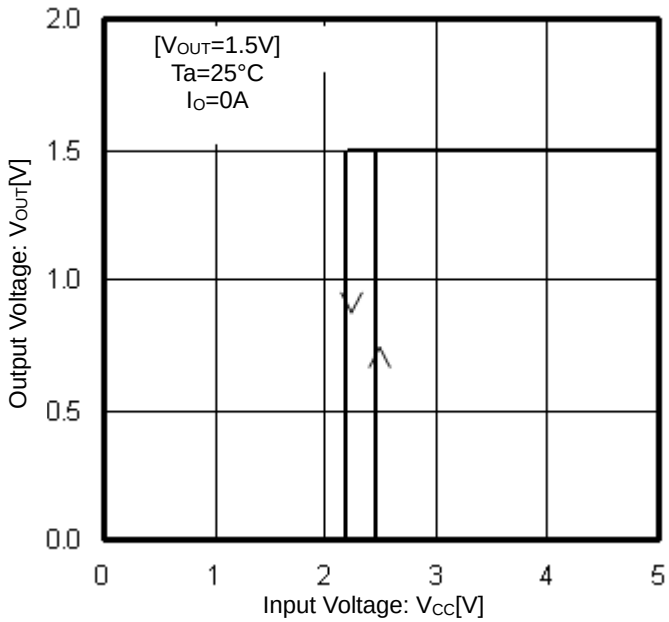

Figure 4. Output Voltage vs Input Voltage

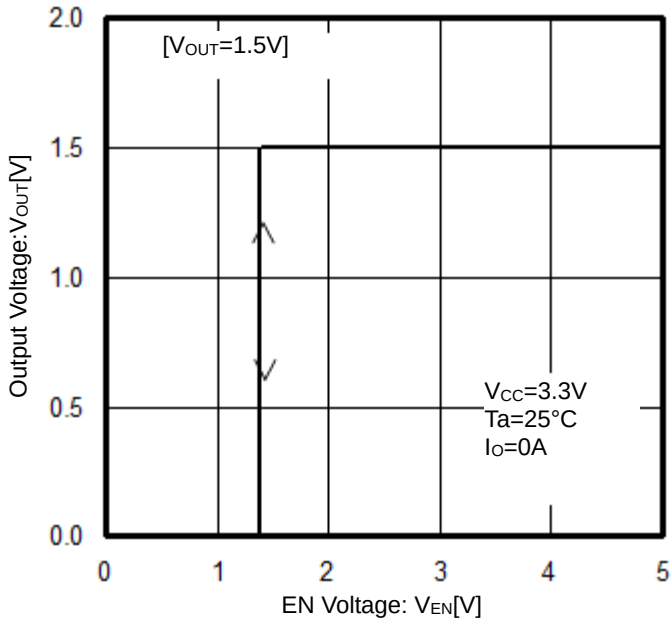

Figure 5. Output Voltage vs EN Voltage

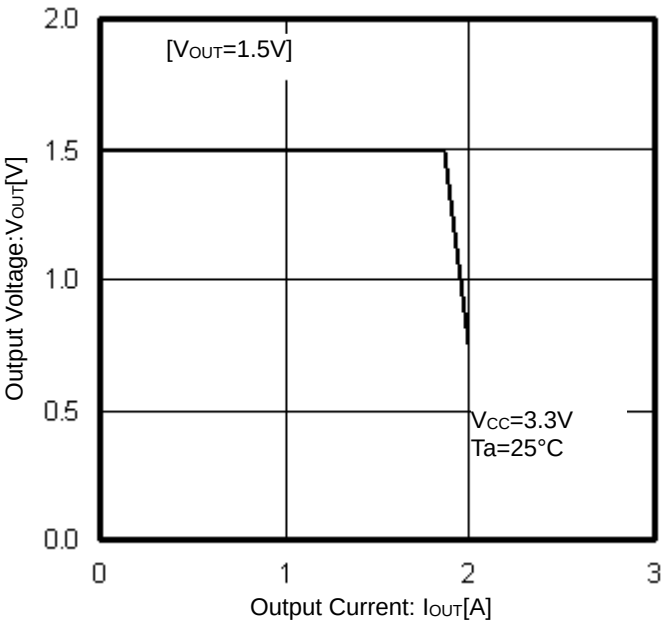

Figure 6. Output Voltage vs Output Current

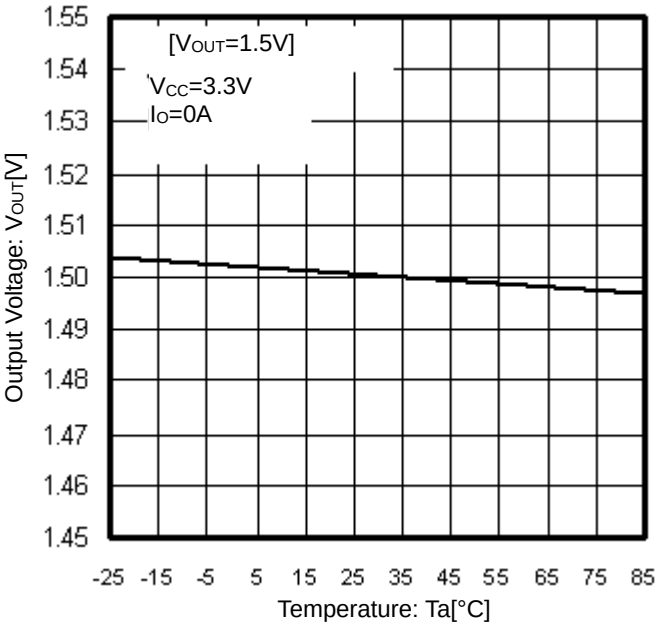

Figure 7. Output Voltage vs Temperature

© 2012 ROHM Co., Ltd. All rights reserved.

Downloaded from Arrow.com.

Typical Performance Curves - continued

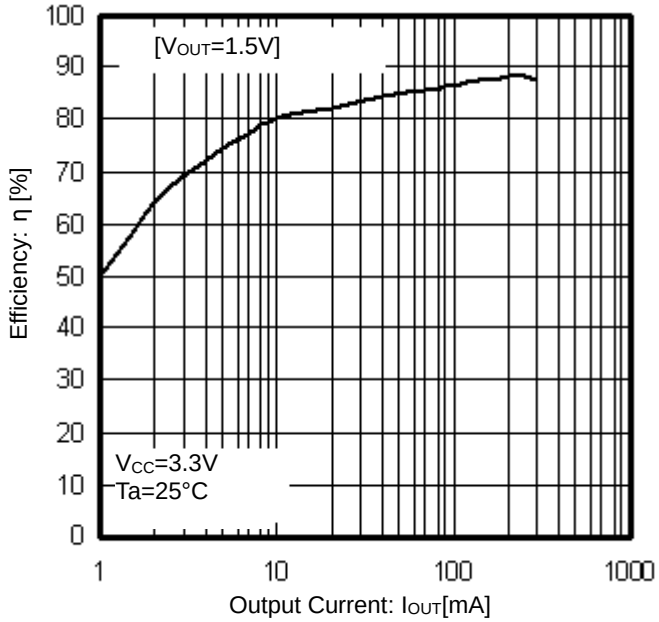

Figure 8. Efficiency vs Output Current

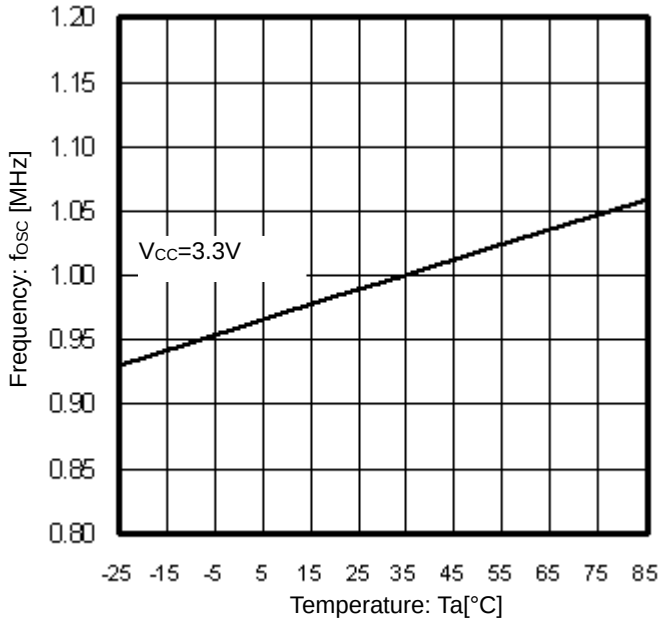

Figure 9. Frequency vs Temperature

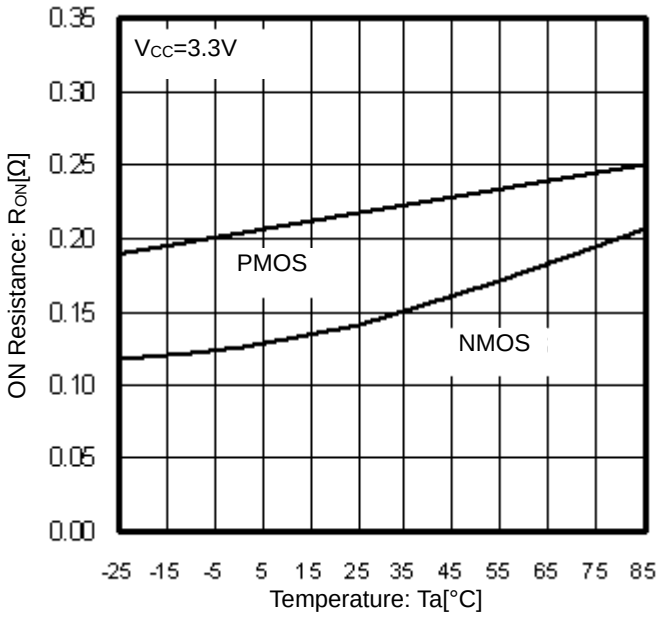

Figure 10. On Resistance vs Temperature

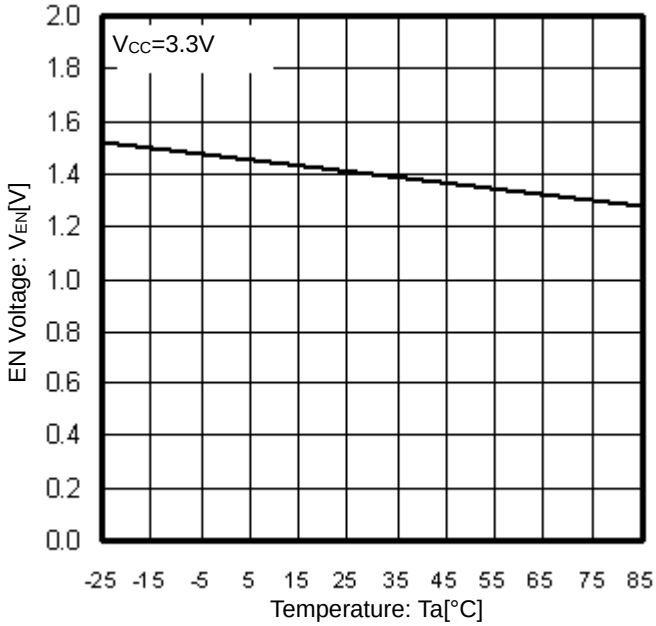

Figure 11. EN Voltage vs Temperature

© 2012 ROHM Co., Ltd. All rights reserved.

Downloaded from Arrow.com.

Typical Performance Curves - continued

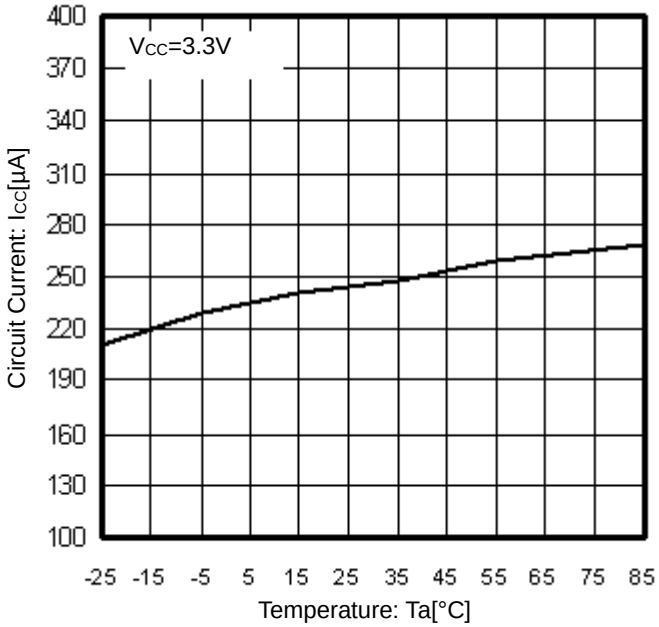

Figure 12. Circuit Current vs Temperature

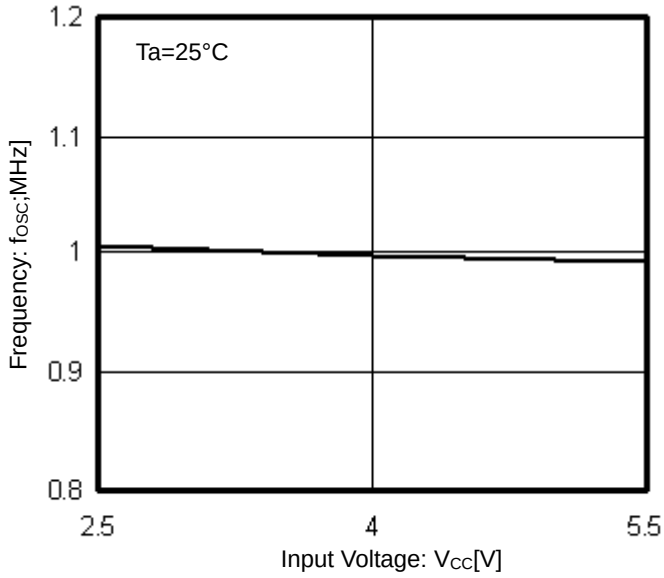

Figure 13. Frequency vs Input Voltage

Typical Waveforms

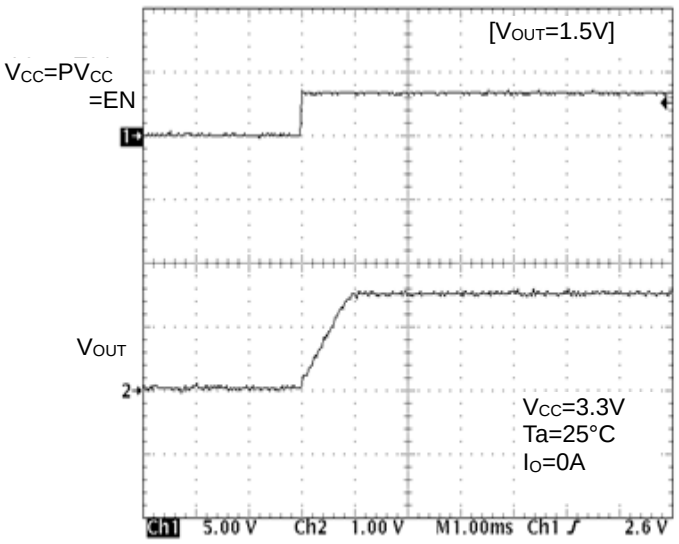

Figure 14. Soft Start Waveform

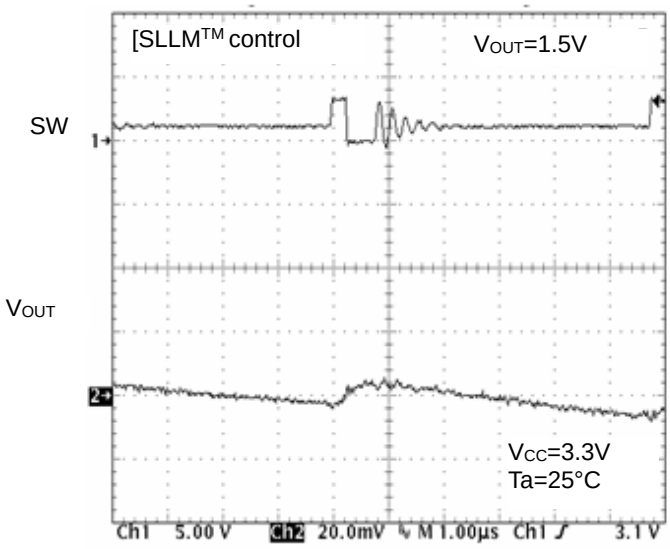

Figure 15. SW waveform
(Io=10mA)

© 2012 ROHM Co., Ltd. All rights reserved.

Downloaded from Arrow.com.

Typical Waveforms - continued

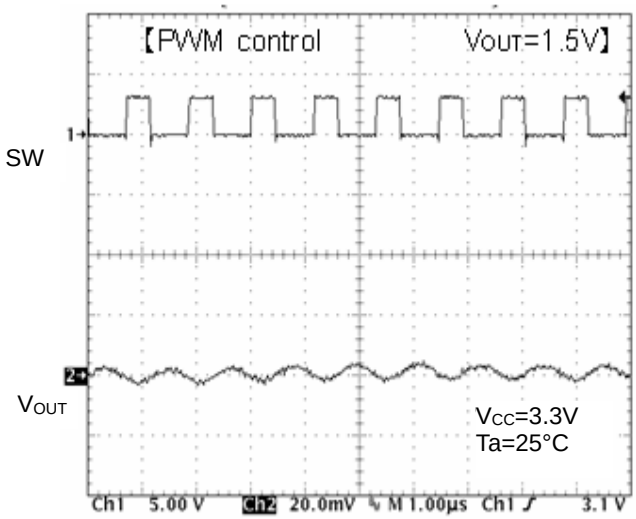

Figure 16. SW waveform
(Io=200mA)

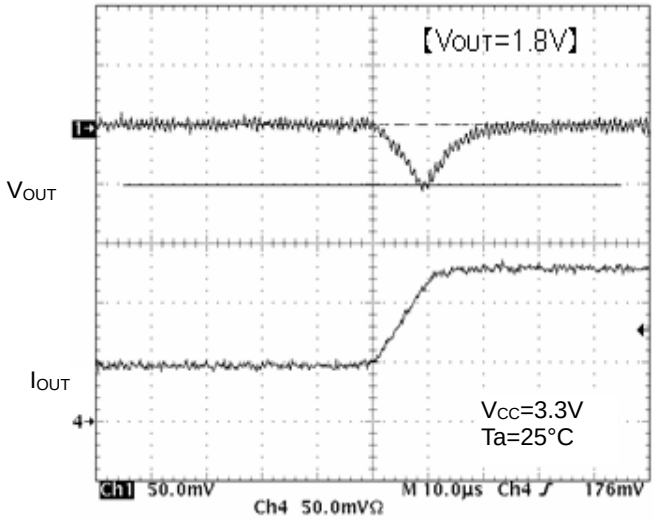

Figure 17. Transient Response
(Io=50mA to 125mA , 10µs)

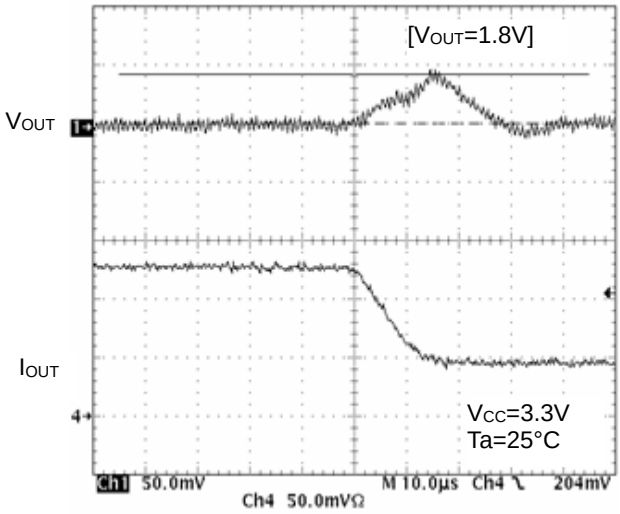

Figure 18. Transient Response
(Io=125mA to 50mA , 10µs)

© 2012 ROHM Co., Ltd. All rights reserved.

Downloaded from Arrow.com.

Application Information

1. Operation

BD9122GUL is a synchronous step-down switching regulator that achieves faster transient response by employing current mode PWM control system. Its switching operation utilizes PWM (Pulse Width Modulation) mode for heavier load, while SLLM™ (Simple Light Load Mode) operation for lighter load to improve efficiency.

(1) Synchronous Rectifier

Integrated synchronous rectification using two MOSFETS reduces power dissipation and increases efficiency when compared to converters using external diodes. Internal shoot-through current limiting circuit further reduces power dissipation.

(2) Current Mode PWM Control

The PWM control signal of this IC depends on two feedback loops, the voltage feedback and the inductor current feedback.

(a) PWM (Pulse Width Modulation) control

The clock signal coming from OSC has a frequency of 1Mhz. When OSC sets the RS latch, the P-channel MOSFET is turned ON and the N-channel MOSFET is turned OFF, causing an inductor current I_L to increase. The opposite happens when the current comparator (Current Comp) resets the RS latch i.e. the P-channel MOSFET is turned OFF and the N-channel MOSFET is turned ON. Current Comp's output is a comparison of two signals, the current feedback control signal "SENSE" which is a voltage proportional to the current I_L and the voltage feedback control signal, FB.

(b) SLLM™ (Simple Light Load Mode) Control

When the control mode is shifted by PWM from heavier load to lighter load or vice versa, the switching pulse is designed to turn OFF with the device held operating in normal PWM control loop. This allows linear operation without voltage drop or deterioration in transient response during the sudden load changes.

Although the PWM control loop continues to operate with a SET signal from OSC and a RESET signal from Current Comp, it is designed such that the RESET signal is kept constant when shifted to the light mode where the switching is tuned OFF and the switching pulses disappear. Activating the switching discontinuously reduces the switching dissipation and improves the efficiency.

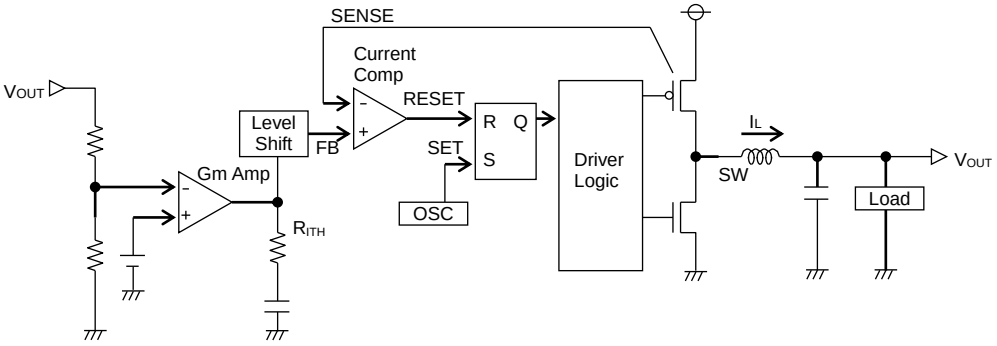

Figure 19. Diagram of Current Mode PWM Control

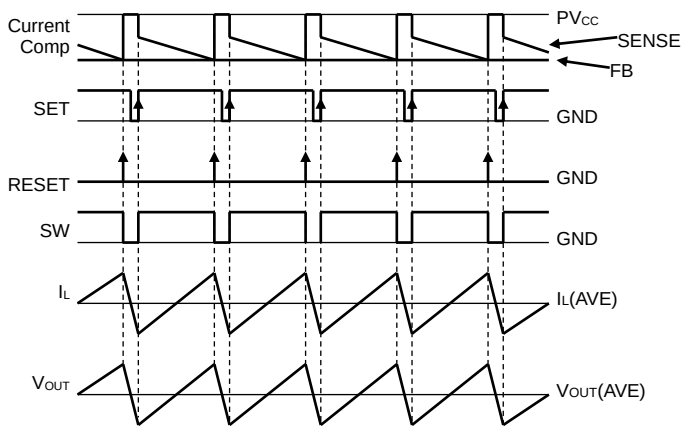

Figure 20. PWM Switching Timing Chart

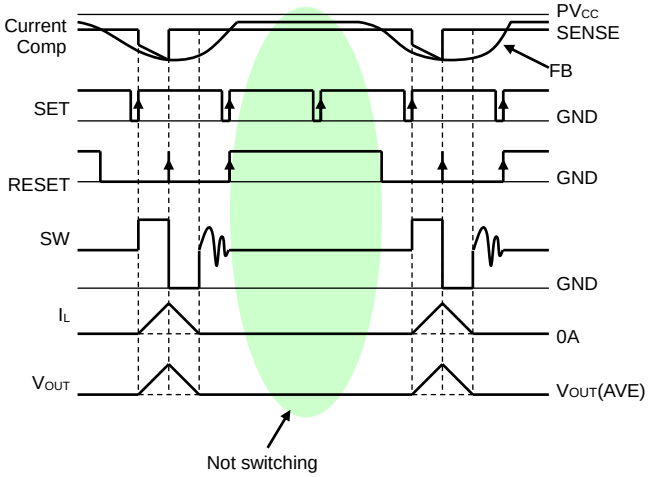

Figure 21. SLLM™ Switching Timing Chart

© 2012 ROHM Co., Ltd. All rights reserved.

Downloaded from Arrow.com.

2. Description of Operations

(1) Soft-Start Function
During start-up, the soft-start circuit gradually establishes the output voltage to limit the input current. This prevents the overshoot in the output voltage and inrush current.

(2) Shutdown Function
When EN terminal is “Low”, the device operates in Standby Mode, and all the functional blocks including reference voltage circuit, internal oscillator and drivers are turned OFF. Circuit current during standby is 0μA (Typ).

(3) UVLO Function
It detects whether the input voltage is sufficient enough to secure that the expected output voltage of this IC. A hysteresis width of 50 mV (Typ) is provided to prevent the output from chattering.

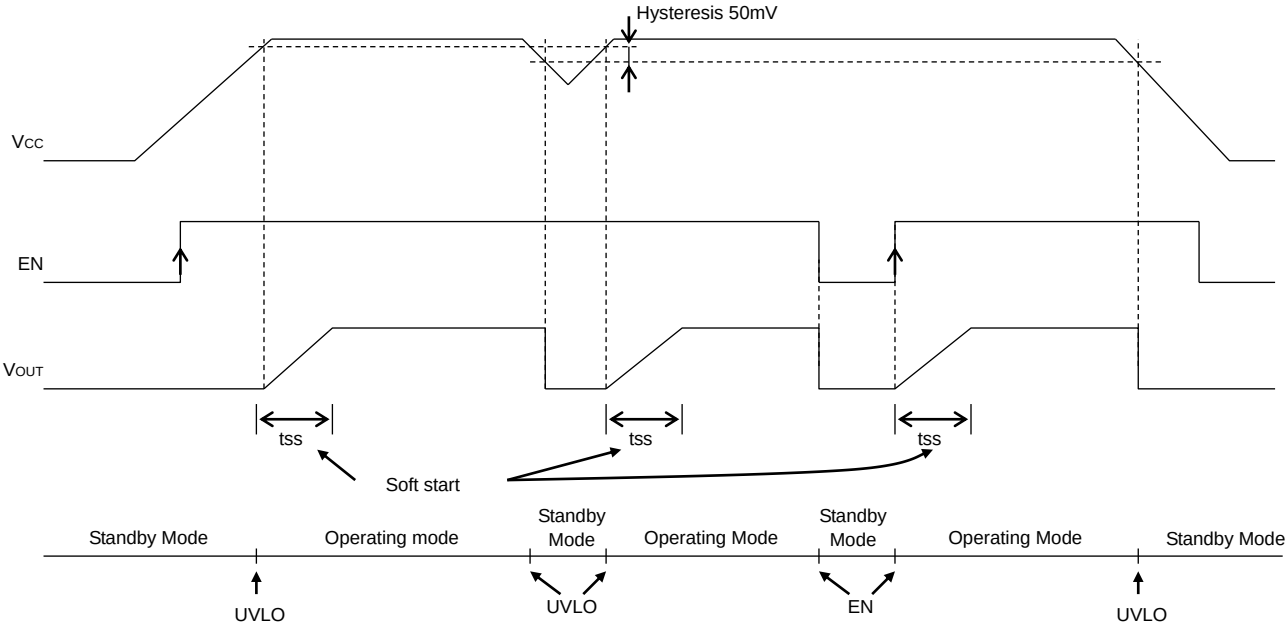

Figure 22. Soft Start, Shutdown, UVLO Timing Chart

(4) Short-Current Protection Circuit with Time Delay Function
To protect the IC from breakdown, the short-circuit protection circuit turns the output off when the internal current limiter is activated continuously for a fixed time (t_{LATCH}) or more. The output that is held OFF may be turned ON again by restarting EN or by resetting UVLO.

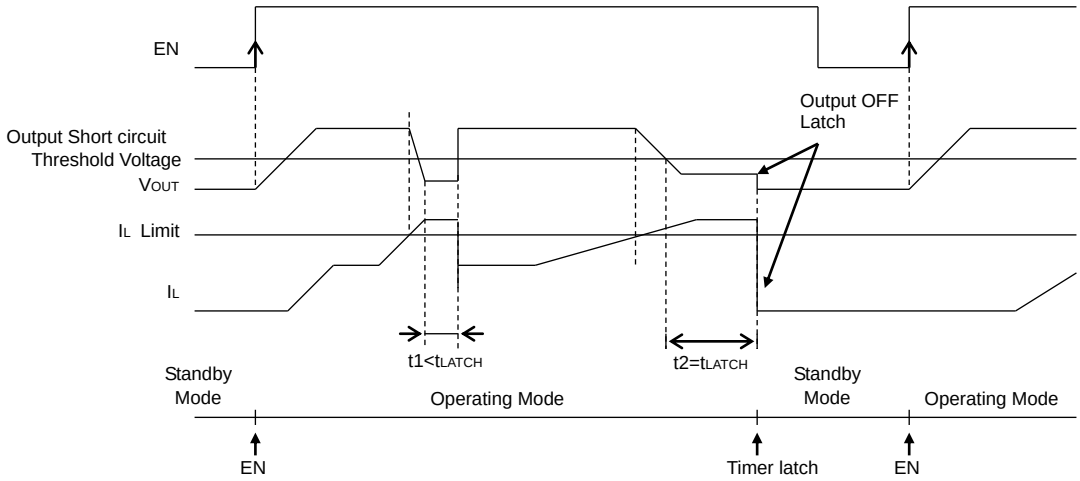

Figure 23. Short-Circuit Protection with Time Delay Diagram

© 2012 ROHM Co., Ltd. All rights reserved.

Downloaded from Arrow.com.

3. Information on Advantages

Advantage 1 : Offers fast transient response with current mode control system.

BD9122GUL(transient response I_O=50mA⇔125mA)

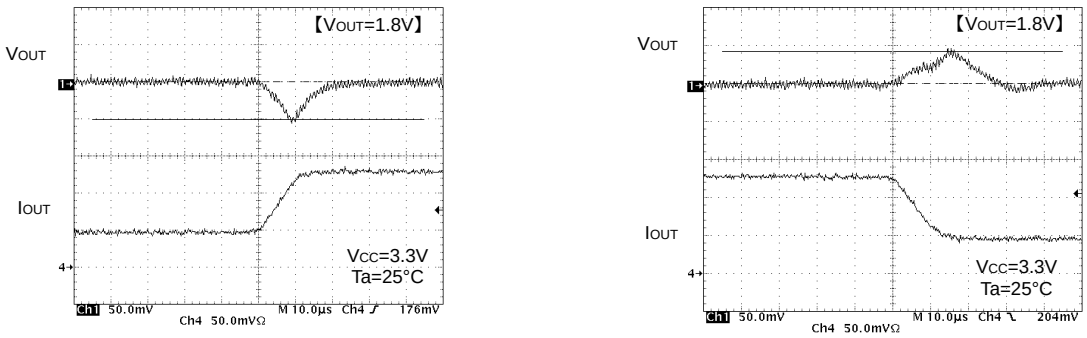

Io=50mA to 125mA Io=125mA to 50mA

Figure 24. Comparison of Transient Response

Advantage 2 : Offers high efficiency for all load range.

(a) For Lighter Load:
This IC utilizes the current control mode called SLLM™ for lighter load, which reduces various dissipation such as switching dissipation (P_{SW}), gate charge/discharge dissipation, ESR dissipation of output capacitor (P_{ESR}) and on-resistance dissipation (P_{RON}) that may otherwise cause reduction in efficiency for lighter load.

↓

Achieve efficiency improvement for lighter load.

(b) For Heavier Load:
This IC utilizes the synchronous rectifying mode and uses low ON-Resistance power MOSFETs .

{ ON Resistance of P-channel MOS FET : 0.3Ω(Typ)
{ ON Resistance of N-channel MOS FET : 0.2Ω(Typ)

↓

Achieve efficiency improvement for heavier load.

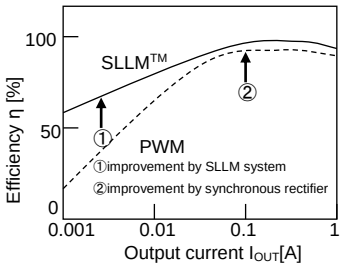

Figure 25. Efficiency

Offers high efficiency for all load range with the improvements mentioned above.

Advantage 3 : ・Supplied in smaller package due to small-sized power MOS FET incorporated.

↓

・Required Output capacitor (Co) for current mode control: 10µF ceramic capacitor
・Required Inductance (L) for the operating frequency of 1 MHz: 2.2µH inductor

Reduces a mounting area required.

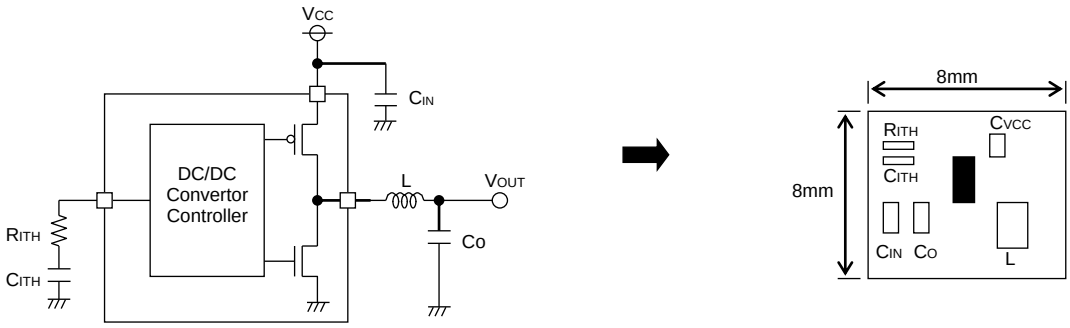

Figure 26. Example Application

© 2012 ROHM Co., Ltd. All rights reserved.

Downloaded from Arrow.com.

4. Switching Regulator Efficiency

Efficiency (η) may be expressed by the equation shown below:

$$\eta = \frac{V_{OUT} \times I_{OUT}}{V_{IN} \times L_{IN}} \times 100 = \frac{P_{OUT}}{P_{IN}} \times 100 = \frac{P_{OUT}}{P_{OUT} + Pd\alpha} \times 100 \quad [\%]$$

Efficiency may be improved by reducing the switching regulator power dissipation factors Pdα as follows:

Dissipation factors:

(1) ON Resistance Dissipation of Inductor and FET：Pd(I^2R)

$$Pd(I^2R) = I_{OUT}{}^2 \times (R_{COIL} + R_{ON})$$

Where:
R_{COIL} is the DC resistance of inductor
R_{ON} is the ON resistance of FET
I_{OUT} is the output current

(2) Gate Charge/Discharge Dissipation：Pd(Gate)

$$Pd(Gate) = C_{gs} \times f \times V^2$$

Where:
C_{gs} is the gate capacitance of FET
f is the switching frequency
V is the gate driving voltage of FET

(3) Switching Dissipation：Pd(SW)

$$Pd(SW) = \frac{V_{IN}{}^2 \times C_{RSS} \times I_{OUT} \times f}{I_{DRIVE}}$$

Where:
C_{RSS} is the reverse transfer capacitance of FET
I_{DRIVE} is the peak current of gate

(4) ESR Dissipation of Capacitor：Pd(ESR)

$$Pd(ESR) = I_{RMS}{}^2 \times ESR$$

Where:
I_{RMS} is the ripple current of capacitor
ESR is the equivalent series resistance.

(5) Operating Current Dissipation of IC：Pd(IC)

$$Pd(IC) = V_{IN} \times I_{CC}$$

Where:
I_{CC} is the circuit current.

© 2012 ROHM Co., Ltd. All rights reserved.

Downloaded from Arrow.com.

5. Consideration on Permissible Dissipation and Heat Generation

Since this IC functions with high efficiency without significant heat generation in most applications, no special consideration is needed on permissible dissipation or heat generation. In case of extreme conditions, however, including lower input voltage, higher output voltage, heavier load, and/or higher temperature, the permissible dissipation and/or heat generation must be carefully considered.

For dissipation, only conduction losses due to DC resistance of inductor and ON Resistance of FET are considered. This is because the conduction losses are the most significant among other dissipation mentioned above including gate charge/discharge dissipation and switching dissipation.

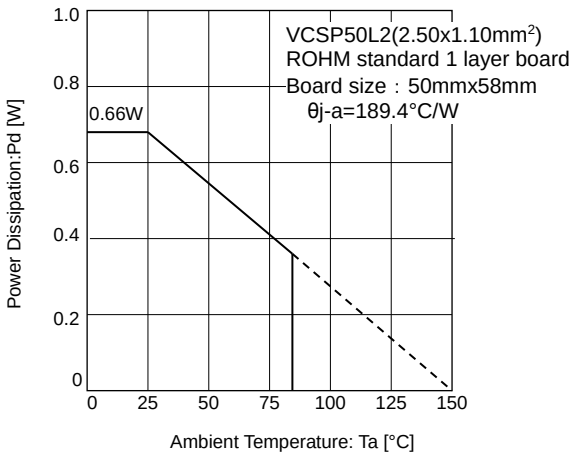

Figure 27. Thermal Derating Curve (VCSP50L2)

$$P = I_{OUT}{}^2 \times R_{ON}$$

$$R_{ON} = D \times R_{ONP} + (1 - D) R_{ONN}$$

Where:

D is the ON duty (=V_{OUT}/V_{CC})

R_{COIL} is the DC Resistance of coil

R_{ONP} is the ON Resistance of P-channel MOSFET

R_{ONN} is the ON Resistance of N-channel MOSFET

I_{OUT} is the Output Current

If V_{CC}=3.3V, V_{OUT}=1.5V, R_{ONP}=0.3Ω, R_{ONN}=0.2Ω

I_{OUT}=0.3A, for example,

$$D = V_{OUT} / V_{CC} = 1.5 / 3.3 = 0.45$$

$$R_{ON} = 0.45 \times 0.3 + (1 - 0.45) \times 0.2$$

$$= 0.135 + 0.11$$

$$= 0.245 \quad [\Omega]$$

$$P = 0.3^2 \times 0.245 \approx 22.1 \quad [mW]$$

As R_{ONP} is greater than R_{ONN} in this IC, the dissipation increases as the ON duty becomes greater. Considering the dissipation shown above, thermal design must be carried out with sufficient margin allowed.

© 2012 ROHM Co., Ltd. All rights reserved.

Downloaded from Arrow.com.

6. Selection of Components Externally Connected

(1) Selection of Inductor (L)

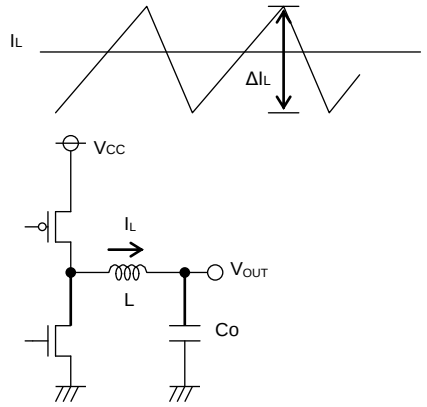

Figure 28. Output Ripple Current

The inductance significantly depends on output ripple current. As seen in the equation (1), the ripple current decreases as the inductor and/or switching frequency increases.

$$\Delta I_L = \frac{(V_{CC} - V_{OUT}) \times V_{OUT}}{L \times V_{CC} \times f} \quad [A] \quad \cdot\cdot\cdot (1)$$

Appropriate ripple current at output should be ±30% of the maximum output current.

$$\Delta I_L = 0.3 \times I_{OUTMax} \quad [A] \quad \cdot\cdot\cdot (2)$$

$$L = \frac{(V_{CC} - V_{OUT}) \times V_{OUT}}{\Delta I_L \times V_{CC} \times f} \quad [H] \quad \cdot\cdot\cdot (3)$$

Where:
ΔI_L is the Output ripple current
f is the Switching frequency

Note: Current exceeding the current rating of the inductor results in magnetic saturation of the inductor, which decreases efficiency. The inductor must be selected allowing sufficient margin with which the peak current may not exceed its current rating.

Note: Select the inductor of low resistance component (such as DCR and ACR) to minimize dissipation in the inductor for better efficiency.

(2) Selection of Output Capacitor (C_O)

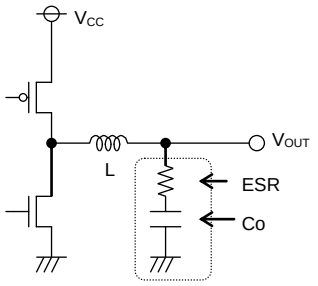

Figure 29. Output Capacitor

Output capacitor should be selected with the consideration to stability region and equivalent series resistance required to smoothen the ripple voltage.

Output ripple voltage is determined by the equation (4) :

$$\Delta V_{OUT} = \Delta I_L \times ESR \quad [V] \quad \cdot\cdot\cdot (4)$$

Where:
ΔI_L is the Output ripple current
ESR is the Equivalent series resistance of output capacitor

Note: Rating of the capacitor should be determined allowing sufficient margin against output voltage. Less ESR allows reduction in output ripple voltage.

As the output rise time must be designed to fall within the soft-start time, the capacitance of output capacitor should be determined with consideration on the requirements of equation (5):

$$C_o \le \frac{t_{SS} \times (I_{LIMIT} - I_{OUT})}{V_{OUT}} \quad \cdot\cdot\cdot (5)$$

Where:
t_{SS} is the soft-start time
I_{limit} is the over current detection level, 1A(Typ)

If V_{OUT}=1.5V, I_{OUT}=0.3A, and t_{SS}=1ms,

$$C_O \le \frac{1m \times (1 - 0.3)}{1.5} \approx 467 \quad [\mu F]$$

Incorrect value of capacitance may cause problem in startup. A10μF to 100μF ceramic capacitor is recommended.

© 2012 ROHM Co., Ltd. All rights reserved.

Downloaded from Arrow.com.

(3) Selection of Input Capacitor (C_{IN})

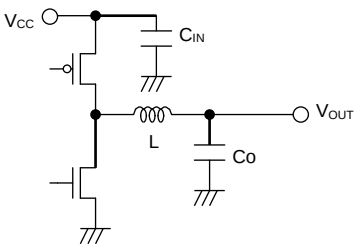

Figure 30. Input Capacitor

Input capacitor to be selected must be a low ESR capacitor with capacitance sufficient to cope with high ripple current to prevent high transient voltage. The ripple current I_{RMS} is given by the equation (6):

$$I_{RMS} = I_{OUT} \times \frac{\sqrt{V_{OUT}(V_{CC} - V_{OUT})}}{V_{CC}} \quad [A] \quad \cdot\cdot\cdot (6)$$

< Worst case > I_{RMSMax}

When V_{CC} is twice the V_{OUT}, $I_{RMS} = \frac{I_{OUT}}{2}$

If V_{CC}=3.3V, V_{OUT}=1.5V, and I_{OUTMax}=0.3A

$$I_{RMS} = 0.3 \times \frac{\sqrt{1.5(3.3-1.5)}}{3.3} = 0.15 \quad [A_{RMS}]$$

A low ESR 10μF/10V ceramic capacitor is recommended to reduce ESR dissipation of input capacitor for better efficiency.

(4) Calculating R_{ITH}, C_{ITH} for Phase Compensation

Since the Current Mode Control is designed to limit an inductor current, a pole (phase lag) appears in the low frequency area due to a CR filter consisting of an output capacitor and a load resistance, while a zero (phase lead) appears in the high frequency area due to the output capacitor and its ESR. Therefore, the phases are easily compensated by adding a zero to the power amplifier output with C and R as described below to cancel a pole at the power amplifier.

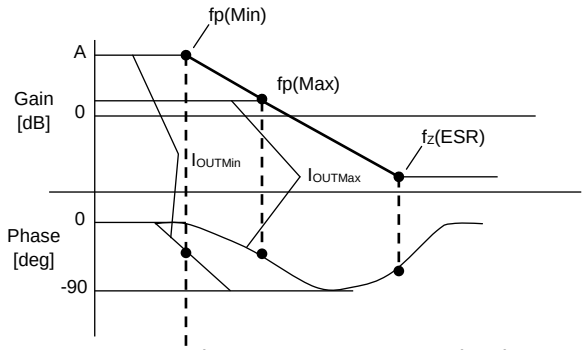

Figure 31. Open Loop Gain Characteristics

$$fp = \frac{1}{2\pi \times R_O \times C_O}$$

$$f_{Z(ESR)} = \frac{1}{2\pi \times ESR \times C_O}$$

Pole at Power Amplifier

When the output current decreases, the load resistance Ro increases and the pole frequency decreases.

$$fp_{(Min)} = \frac{1}{2\pi \times R_{O\,Max} \times C_O} \quad [Hz] \leftarrow with\,lighter\,load$$

$$fp_{(Max)} = \frac{1}{2\pi \times R_{O\,Min} \times C_O} \quad [Hz] \leftarrow with\,heavier\,load$$

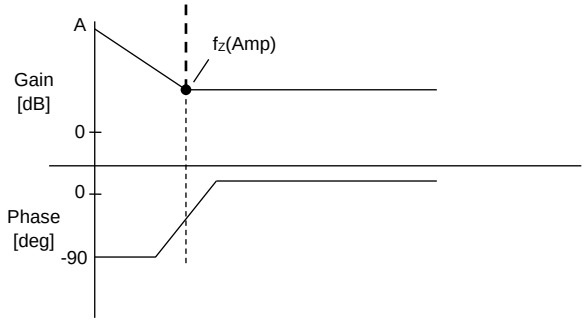

Figure 32. Error Amp Phase Compensation Characteristics

Zero at Power Amplifier

Increasing capacitance of the output capacitor lowers the pole frequency while the zero frequency does not change. (This is because when the capacitance is doubled, the capacitor ESR is reduced to half.)

$$f_{Z(Amp)} = \frac{1}{2\pi \times R_{ITH} \times C_{ITH}}$$

© 2012 ROHM Co., Ltd. All rights reserved.

Downloaded from Arrow.com.

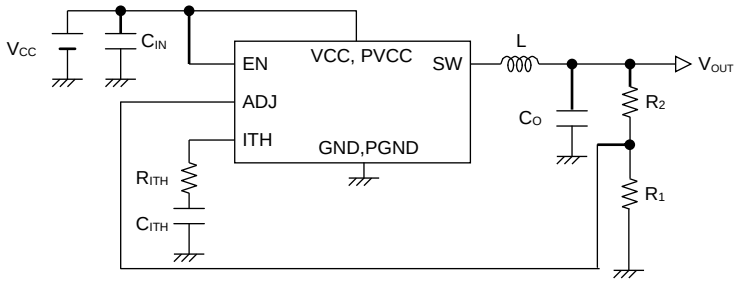

Figure 33. Typical Application

Stable feedback loop may be achieved by canceling the pole fp (Min) produced by the output capacitor and the load resistance with CR zero correction by the error amplifier.

$$f_{Z(Amp)} = fp(Min)$$

$$\rightarrow \frac{1}{2\pi \times R_{ITH} \times C_{ITH}} = \frac{1}{2\pi \times R_{O\,Max} \times C_O}$$

(5) Determination of Output Voltage
The output voltage V_{OUT} is determined by the equation (7):

$$V_{OUT} = (R_2 / R_1 + 1) \times V_{ADJ} \quad \cdot\cdot\cdot (7)$$

Where:
V_{ADJ} is the Voltage at ADJ terminal (0.8V Typ)

The desired output voltage may be determined by adjusting R_1 and R_2.

(Output voltage range: 1.0V to 2.0V)

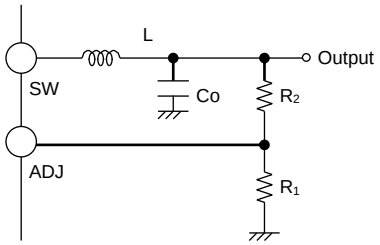

Figure 34. Determination of Output Voltage

Use 1 kΩ to 100 kΩ resistor for R_1. When using a resistor with resistance higher than 100 kΩ, check the assembled set carefully for ripple voltage etc.

7. Cautions on PC Board Layout

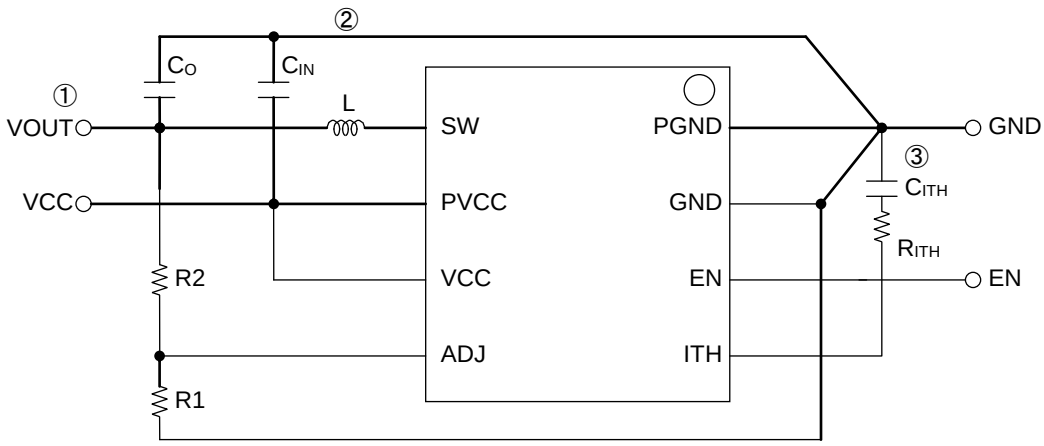

Figure 35. Layout Diagram

① For the sections drawn with heavy line, use thick conductor pattern as short as possible.

② Lay out the input ceramic capacitor C_{IN} near PVCC and PGND pins, and the output capacitor Co near PGND pin.

③ Lay out C_{ITH} and R_{ITH} between the pins ITH and GND as near as possible with the least necessary wiring.

© 2012 ROHM Co., Ltd. All rights reserved.

Downloaded from Arrow.com.

8. Recommended Parts List for the Above Application

Symbol	Part	Value		Manufacturer	Series
L	Coil	2.2uH		FDK	MIPF2016D2R2
C_{IN}	Ceramic Capacitor	10uF		Murata	GRM188B30J106ME47B
C_O	Ceramic Capacitor	10uF		Murata	GRM188B30J106ME47B
C_{ITH}	Ceramic Capacitor	V_{OUT}=1.0V	2200pF	Murata	GRM15 Series
		V_{OUT}=1.2V			
		V_{OUT}=1.5V			
		V_{OUT}=1.8V	1000pF		
		V_{OUT}=2.0V			
R_{ITH}	Resistance	V_{OUT}=1.0V	6.8kΩ	ROHM	MCR006 6801
		V_{OUT}=1.2V			
		V_{OUT}=1.5V			
		V_{OUT}=1.8V	4.7kΩ		MCR006 4701
		V_{OUT}=2.0V			

Note: The parts list presented above is an example of recommended parts. Although the parts are standard, actual circuit characteristics should be checked on your application carefully before using. Be sure to allow sufficient margins to accommodate variations between external devices and this IC when employing the depicted circuit with other circuit constants modified. Both static and transient characteristics should be considered in establishing these margins. When switching noise is significant and may affectt the system, a low pass filter should be inserted between the VCC and PVCC pins, and a Schottky Barrier diode established between the SW and PGND pins.

I/O Equivalent Circuit

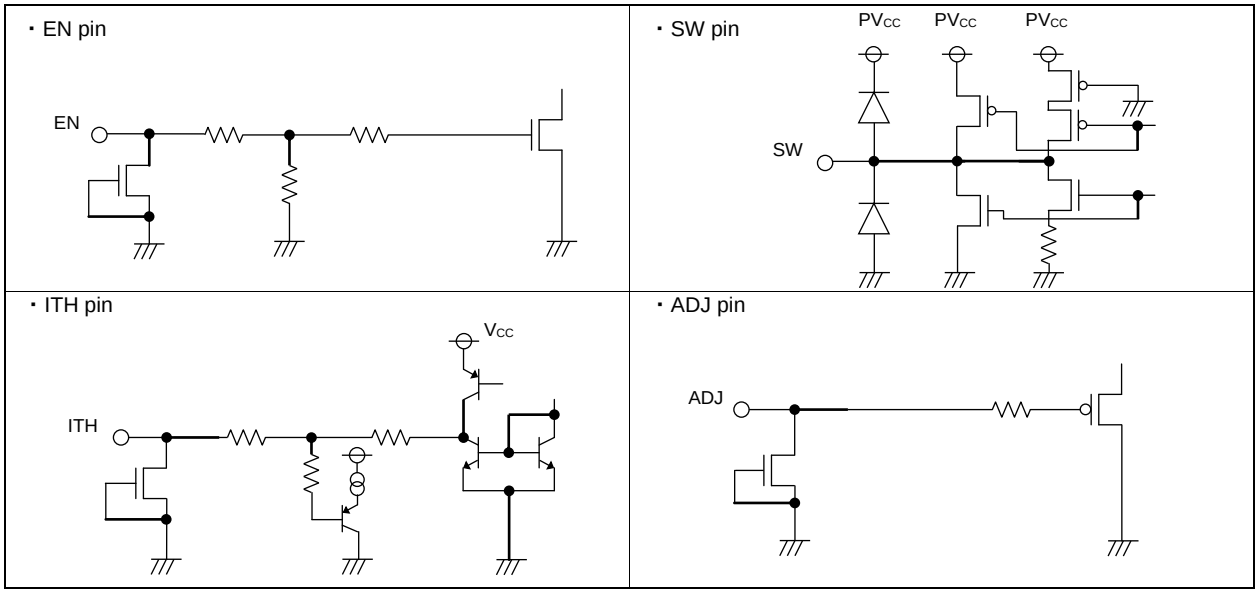

Figure 36. I/O Equivalent Circuit

© 2012 ROHM Co., Ltd. All rights reserved.

Downloaded from Arrow.com.

Operational Notes

1. **Reverse Connection of Power Supply**
   Connecting the power supply in reverse polarity can damage the IC. Take precautions against reverse polarity when connecting the power supply, such as mounting an external diode between the power supply and the IC's power supply pins.

2. **Power Supply Lines**
   Design the PCB layout pattern to provide low impedance supply lines. Separate the ground and supply lines of the digital and analog blocks to prevent noise in the ground and supply lines of the digital block from affecting the analog block. Furthermore, connect a capacitor to ground at all power supply pins. Consider the effect of temperature and aging on the capacitance value when using electrolytic capacitors.

3. **Ground Voltage**
   Ensure that no pins are at a voltage below that of the ground pin at any time, even during transient condition.

4. **Ground Wiring Pattern**
   When using both small-signal and large-current ground traces, the two ground traces should be routed separately but connected to a single ground at the reference point of the application board to avoid fluctuations in the small-signal ground caused by large currents. Also ensure that the ground traces of external components do not cause variations on the ground voltage. The ground lines must be as short and thick as possible to reduce line impedance.

5. **Thermal Consideration**
   Should by any chance the power dissipation rating be exceeded the rise in temperature of the chip may result in deterioration of the properties of the chip. In case of exceeding this absolute maximum rating, increase the board size and copper area to prevent exceeding the Pd rating.

6. **Recommended Operating Conditions**
   These conditions represent a range within which the expected characteristics of the IC can be approximately obtained. The electrical characteristics are guaranteed under the conditions of each parameter.

7. **Inrush Current**
   When power is first supplied to the IC, it is possible that the internal logic may be unstable and inrush current may flow instantaneously due to the internal powering sequence and delays, especially if the IC has more than one power supply. Therefore, give special consideration to power coupling capacitance, power wiring, width of ground wiring, and routing of connections.

8. **Operation Under Strong Electromagnetic Field**
   Operating the IC in the presence of a strong electromagnetic field may cause the IC to malfunction.

9. **Testing on Application Boards**
   When testing the IC on an application board, connecting a capacitor directly to a low-impedance output pin may subject the IC to stress. Always discharge capacitors completely after each process or step. The IC's power supply should always be turned off completely before connecting or removing it from the test setup during the inspection process. To prevent damage from static discharge, ground the IC during assembly and use similar precautions during transport and storage.

10. **Inter-pin Short and Mounting Errors**
    Ensure that the direction and position are correct when mounting the IC on the PCB. Incorrect mounting may result in damaging the IC. Avoid nearby pins being shorted to each other especially to ground, power supply and output pin. Inter-pin shorts could be due to many reasons such as metal particles, water droplets (in very humid environment) and unintentional solder bridge deposited in between pins during assembly to name a few.

© 2012 ROHM Co., Ltd. All rights reserved.

Downloaded from Arrow.com.

Operational Notes – continued

11. Unused Input Pins

Input pins of an IC are often connected to the gate of a MOS transistor. The gate has extremely high impedance and extremely low capacitance. If left unconnected, the electric field from the outside can easily charge it. The small charge acquired in this way is enough to produce a significant effect on the conduction through the transistor and cause unexpected operation of the IC. So unless otherwise specified, unused input pins should be connected to the power supply or ground line.

12. Regarding the Input Pin of the IC

This monolithic IC contains P+ isolation and P substrate layers between adjacent elements in order to keep them isolated. P-N junctions are formed at the intersection of the P layers with the N layers of other elements, creating a parasitic diode or transistor. For example (refer to figure below):

When GND > Pin A and GND > Pin B, the P-N junction operates as a parasitic diode.
When GND > Pin B, the P-N junction operates as a parasitic transistor.

Parasitic diodes inevitably occur in the structure of the IC. The operation of parasitic diodes can result in mutual interference among circuits, operational faults, or physical damage. Therefore, conditions that cause these diodes to operate, such as applying a voltage lower than the GND voltage to an input pin (and thus to the P substrate) should be avoided.

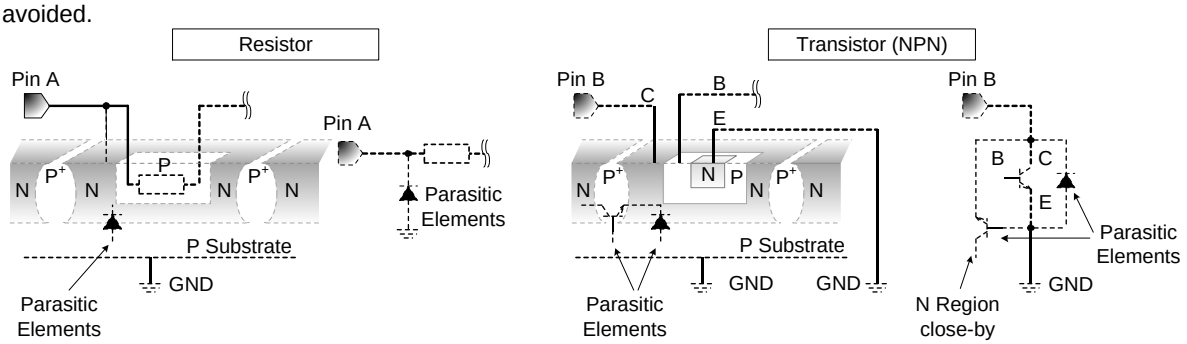

Figure 37. Example of monolithic IC structure

13. Thermal Shutdown Circuit(TSD)

This IC has a built-in thermal shutdown circuit that prevents heat damage to the IC. Normal operation should always be within the IC's power dissipation rating. If however the rating is exceeded for a continued period, the junction temperature (Tj) will rise which will activate the TSD circuit that will turn OFF all output pins. When the Tj falls below the TSD threshold, the circuits are automatically restored to normal operation.
Note that the TSD circuit operates in a situation that exceeds the absolute maximum ratings and therefore, under no circumstances, should the TSD circuit be used in a set design or for any purpose other than protecting the IC from heat damage.

14. Disturbance light

In a device where a portion of silicon is exposed to light such as in a WL-CSP, IC characteristics may be affected due to photoelectric effect. For this reason, it is recommended to come up with countermeasures that will prevent the chip from being exposed to light.

© 2012 ROHM Co., Ltd. All rights reserved.

Downloaded from Arrow.com.

Ordering Information

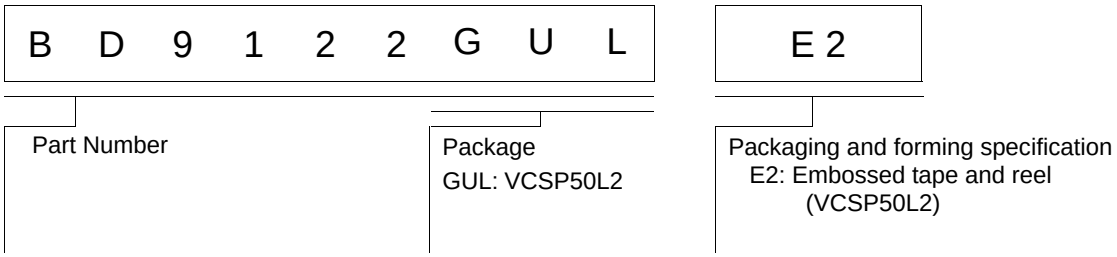

Marking Diagram

VCSP50L2
(TOP VIEW)

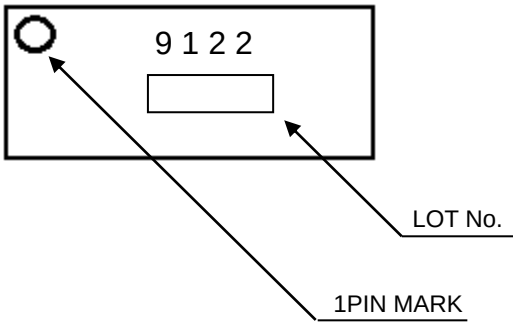

© 2012 ROHM Co., Ltd. All rights reserved.

Downloaded from Arrow.com.

Physical Dimension Tape and Reel Information

Package Name	VCSP50L2 (BD9122GUL)

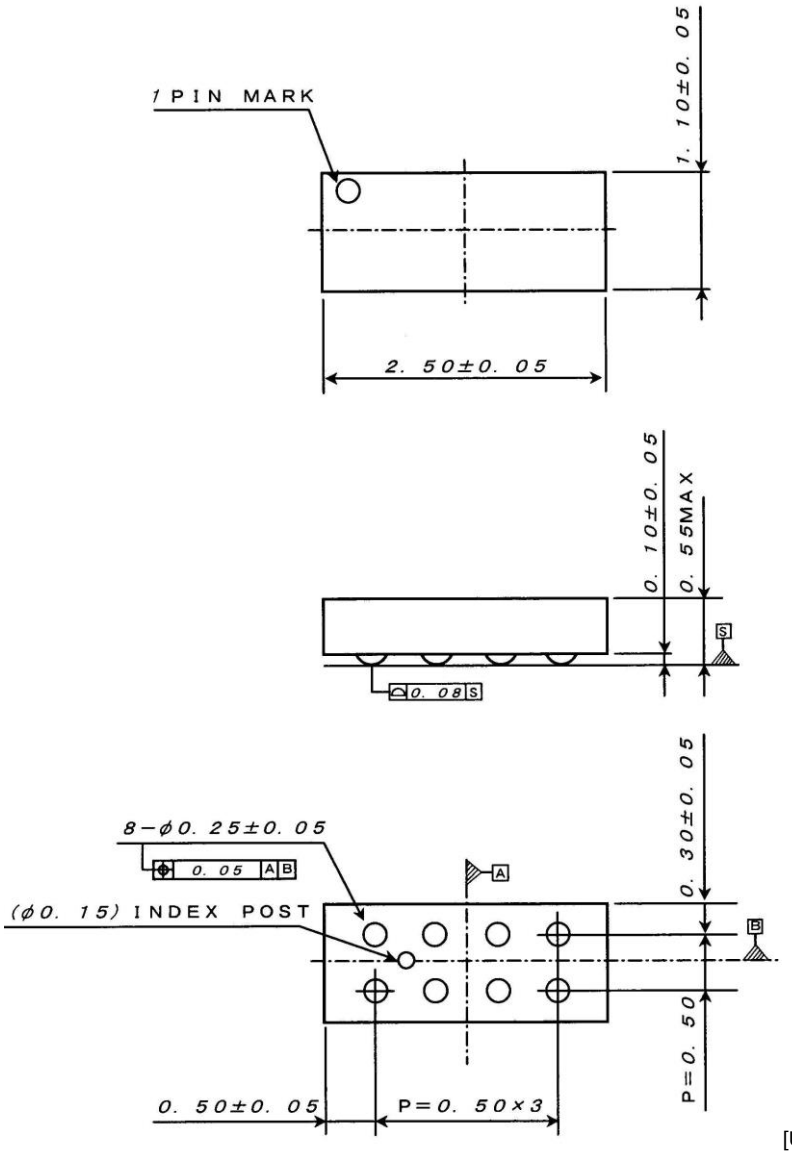

[Unit: mm]

<Tape and Reel information>

Tape	Embossed carrier tape
Quantity	3000pcs
Direction of feed	E2 (The direction is the 1pin of product is at the upper left when you hold reel on the left hand and you pull out the tape on the right hand.)

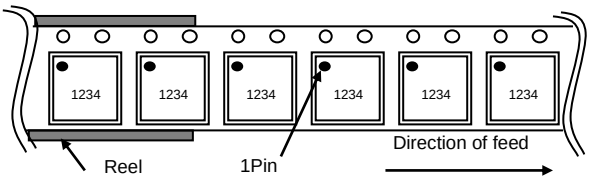

When you order , please order in times the amount of package quantity.

© 2012 ROHM Co., Ltd. All rights reserved.

Downloaded from Arrow.com.

Revision History

Date	Revision	Changes
02.Mar.2012	001	New Release
02.Oct.2014	002	Applied the ROHM Standard Style and improved understandability.

© 2012 ROHM Co., Ltd. All rights reserved.

Downloaded from Arrow.com.

Notice

Precaution on using ROHM Products

1. Our Products are designed and manufactured for application in ordinary electronic equipments (such as AV equipment, OA equipment, telecommunication equipment, home electronic appliances, amusement equipment, etc.). If you intend to use our Products in devices requiring extremely high reliability (such as medical equipment (Note 1), transport equipment, traffic equipment, aircraft/spacecraft, nuclear power controllers, fuel controllers, car equipment including car accessories, safety devices, etc.) and whose malfunction or failure may cause loss of human life, bodily injury or serious damage to property ("Specific Applications"), please consult with the ROHM sales representative in advance. Unless otherwise agreed in writing by ROHM in advance, ROHM shall not be in any way responsible or liable for any damages, expenses or losses incurred by you or third parties arising from the use of any ROHM's Products for Specific Applications.

(Note1) Medical Equipment Classification of the Specific Applications

JAPAN	USA	EU	CHINA
CLASSⅢ	CLASSⅢ	CLASSⅡb	CLASSⅢ
CLASSⅣ		CLASSⅢ	

2. ROHM designs and manufactures its Products subject to strict quality control system. However, semiconductor products can fail or malfunction at a certain rate. Please be sure to implement, at your own responsibilities, adequate safety measures including but not limited to fail-safe design against the physical injury, damage to any property, which a failure or malfunction of our Products may cause. The following are examples of safety measures:
   [a] Installation of protection circuits or other protective devices to improve system safety
   [b] Installation of redundant circuits to reduce the impact of single or multiple circuit failure

3. Our Products are designed and manufactured for use under standard conditions and not under any special or extraordinary environments or conditions, as exemplified below. Accordingly, ROHM shall not be in any way responsible or liable for any damages, expenses or losses arising from the use of any ROHM's Products under any special or extraordinary environments or conditions. If you intend to use our Products under any special or extraordinary environments or conditions (as exemplified below), your independent verification and confirmation of product performance, reliability, etc, prior to use, must be necessary:
   [a] Use of our Products in any types of liquid, including water, oils, chemicals, and organic solvents
   [b] Use of our Products outdoors or in places where the Products are exposed to direct sunlight or dust
   [c] Use of our Products in places where the Products are exposed to sea wind or corrosive gases, including Cl_2, H_2S, NH_3, SO_2, and NO_2
   [d] Use of our Products in places where the Products are exposed to static electricity or electromagnetic waves
   [e] Use of our Products in proximity to heat-producing components, plastic cords, or other flammable items
   [f] Sealing or coating our Products with resin or other coating materials
   [g] Use of our Products without cleaning residue of flux (even if you use no-clean type fluxes, cleaning residue of flux is recommended); or Washing our Products by using water or water-soluble cleaning agents for cleaning residue after soldering
   [h] Use of the Products in places subject to dew condensation

4. The Products are not subject to radiation-proof design.

5. Please verify and confirm characteristics of the final or mounted products in using the Products.

6. In particular, if a transient load (a large amount of load applied in a short period of time, such as pulse. is applied, confirmation of performance characteristics after on-board mounting is strongly recommended. Avoid applying power exceeding normal rated power; exceeding the power rating under steady-state loading condition may negatively affect product performance and reliability.

7. De-rate Power Dissipation (Pd) depending on Ambient temperature (Ta). When used in sealed area, confirm the actual ambient temperature.

8. Confirm that operation temperature is within the specified range described in the product specification.

9. ROHM shall not be in any way responsible or liable for failure induced under deviant condition from what is defined in this document.

Precaution for Mounting / Circuit board design

1. When a highly active halogenous (chlorine, bromine, etc.) flux is used, the residue of flux may negatively affect product performance and reliability.

2. In principle, the reflow soldering method must be used on a surface-mount products, the flow soldering method must be used on a through hole mount products. If the flow soldering method is preferred on a surface-mount products, please consult with the ROHM representative in advance.

For details, please refer to ROHM Mounting specification

© 2014 ROHM Co., Ltd. All rights reserved.

Downloaded from Arrow.com.

Precautions Regarding Application Examples and External Circuits

1. If change is made to the constant of an external circuit, please allow a sufficient margin considering variations of the characteristics of the Products and external components, including transient characteristics, as well as static characteristics.

2. You agree that application notes, reference designs, and associated data and information contained in this document are presented only as guidance for Products use. Therefore, in case you use such information, you are solely responsible for it and you must exercise your own independent verification and judgment in the use of such information contained in this document. ROHM shall not be in any way responsible or liable for any damages, expenses or losses incurred by you or third parties arising from the use of such information.

Precaution for Electrostatic

This Product is electrostatic sensitive product, which may be damaged due to electrostatic discharge. Please take proper caution in your manufacturing process and storage so that voltage exceeding the Products maximum rating will not be applied to Products. Please take special care under dry condition (e.g. Grounding of human body / equipment / solder iron, isolation from charged objects, setting of Ionizer, friction prevention and temperature / humidity control).

Precaution for Storage / Transportation

1. Product performance and soldered connections may deteriorate if the Products are stored in the places where:
   [a] the Products are exposed to sea winds or corrosive gases, including Cl2, H2S, NH3, SO2, and NO2
   [b] the temperature or humidity exceeds those recommended by ROHM
   [c] the Products are exposed to direct sunshine or condensation
   [d] the Products are exposed to high Electrostatic

2. Even under ROHM recommended storage condition, solderability of products out of recommended storage time period may be degraded. It is strongly recommended to confirm solderability before using Products of which storage time is exceeding the recommended storage time period.

3. Store / transport cartons in the correct direction, which is indicated on a carton with a symbol. Otherwise bent leads may occur due to excessive stress applied when dropping of a carton.

4. Use Products within the specified time after opening a humidity barrier bag. Baking is required before using Products of which storage time is exceeding the recommended storage time period.

Precaution for Product Label

QR code printed on ROHM Products label is for ROHM's internal use only.

Precaution for Disposition

When disposing Products please dispose them properly using an authorized industry waste company.

Precaution for Foreign Exchange and Foreign Trade act

Since our Products might fall under controlled goods prescribed by the applicable foreign exchange and foreign trade act, please consult with ROHM representative in case of export.

Precaution Regarding Intellectual Property Rights

1. All information and data including but not limited to application example contained in this document is for reference only. ROHM does not warrant that foregoing information or data will not infringe any intellectual property rights or any other rights of any third party regarding such information or data. ROHM shall not be in any way responsible or liable for infringement of any intellectual property rights or other damages arising from use of such information or data.:

2. No license, expressly or implied, is granted hereby under any intellectual property rights or other rights of ROHM or any third parties with respect to the information contained in this document.

Other Precaution

1. This document may not be reprinted or reproduced, in whole or in part, without prior written consent of ROHM.

2. The Products may not be disassembled, converted, modified, reproduced or otherwise changed without prior written consent of ROHM.

3. In no event shall you use in any way whatsoever the Products and the related technical information contained in the Products or this document for any military purposes, including but not limited to, the development of mass-destruction weapons.

4. The proper names of companies or products described in this document are trademarks or registered trademarks of ROHM, its affiliated companies or third parties.

© 2014 ROHM Co., Ltd. All rights reserved.

Downloaded from Arrow.com.

General Precaution

1. Before you use our Products, you are requested to carefully read this document and fully understand its contents. ROHM shall not be in any way responsible or liable for failure, malfunction or accident arising from the use of any ROHM's Products against warning, caution or note contained in this document.

2. All information contained in this document is current as of the issuing date and subject to change without any prior notice. Before purchasing or using ROHM's Products, please confirm the latest information with a ROHM sales representative.

3. The information contained in this document is provided on an "as is" basis and ROHM does not warrant that all information contained in this document is accurate and/or error-free. ROHM shall not be in any way responsible or liable for any damages, expenses or losses incurred by you or third parties resulting from inaccuracy or errors of or concerning such information.

© 2014 ROHM Co., Ltd. All rights reserved.

Downloaded from Arrow.com.