PTS125 Series
12 mm Tactile Switches



Description

The PTS125 series 12mm tactile switches are most often seen used in industrial, consumer products, instrumentation and computing equipment. Available in various heights with a snap-fit actuator option and THT and SMT terminations, PTS125 tactile switch is long-lasting and highly responsive.

Features & Benefits

- THT and SMT terminations
- Snap fit actuator option
- Various heights

Applications

- Consumer products
- Computer products
- Instrumentation
- Industrial

Specifications

Function	Momentary action
Contact Arrangement	1 make contact, SPST, N.O.
Terminals	PC pins for THT and G type for SMT
Travel	130 gf 0.20 mm, 180 gf 0.25 mm 250 gf 0.30 mm, 350 gf 0.35 mm
Packaging	Dimensions of reels according to EIA 481B. External diameter 330 mm.

Mechanical Specifications

Operating Force	130 gf, 180 gf, 250 gf, 350 gf

Electrical Specifications

Max. Voltage	12 VDC
Max. Current	50 mA
Dielectric Strength	250 V AC (1 mn)
Contact Resistance	< 100 mΩ
Insulation Resistance	>100MΩ
Bounce Time	< 5 ms

Electrical Specifications

Operating Temperature	-40˚C to 85˚C

Process

Soldering	This component is suited to the following methods: Infrared reflow soldering in accordance with IEC 61760-1 for SMT version Wave soldering compatible with lead free soldering profile

Notes:
Specifications listed above are for switches with standard options. For information on specific and custom switches, consult Customer Service Center. The PTS series is not certified for using in Automotive application and no PPAP. However, in the case of some automotive accessories and specific applications for 2 and 3 wheeled vehicles the PTS is widely used and very suitable. Please contact your local C&K representative to discuss your application and the best switch solution.

Packaging

Soldering Style	Height	Packaging	Parts per Packaging
THT	All heights	Plastic bag	500
SMT	4.3 mm	Tape & reel	900
SMT	4.3 mm with pegs	Tape & reel	600
SMT	7.3 mm	Tape & reel	500
SMT	7.3 mm with pegs	Tape & reel	500
SMT	8.5 mm	Tape & reel	500
SMT	8.5 mm with pegs	Tape & reel	400
SMT	12 mm	Tape & reel	250

© 2025 Littelfuse, Inc.
Specifications are subject to change without notice.
Revised: VL 09/15/25

Downloaded from Arrow.com.

PTS125 Series
12 mm Tactile Switches

THT Version without Pegs with Round Actuator
H = 4.3, 7.3, 8.5 mm (other height upon request)

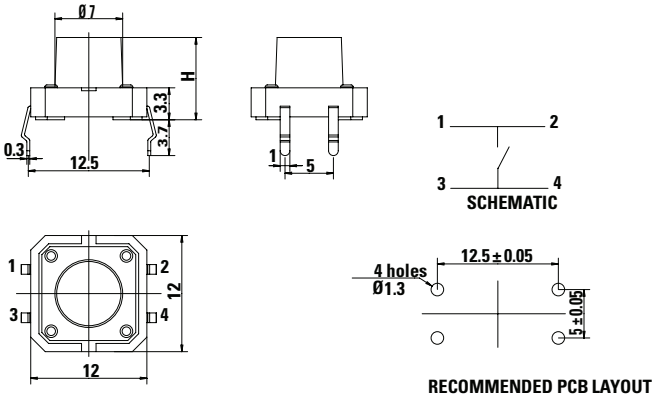

THT Version with Pegs with Round Actuator
H = 4.3, 7.3, 8.5 mm (other height upon request)

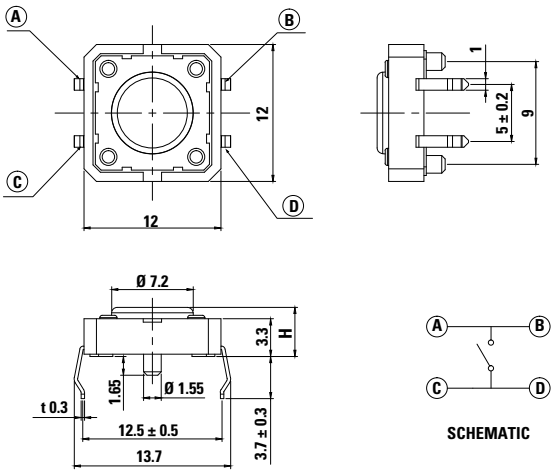

SMT Version with Pegs with Round Actuator and Pegs
H = 4.3, 7.3, 8.5 mm (other height upon request)

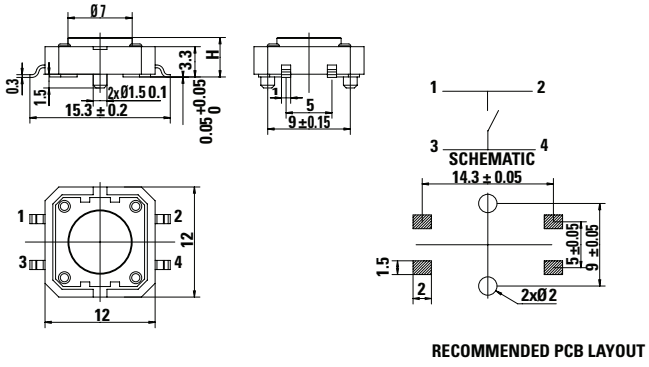

THT Version without Pegs with Square Snap Fit
Actuator H = 7.3 mm

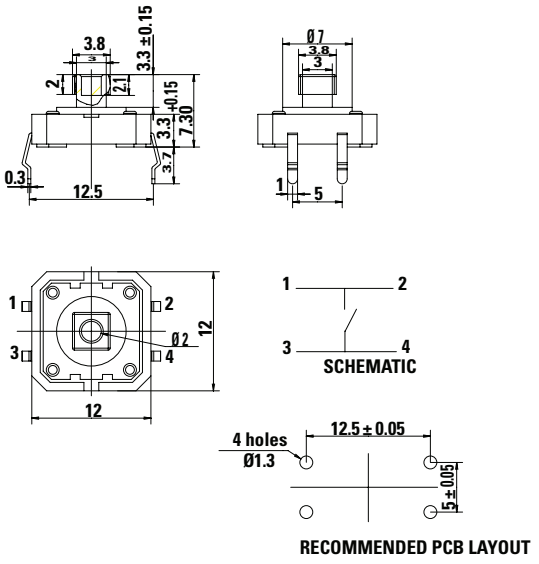

SMT Version without Pegs with Round Actuator and Pegs
H = 4.3, 7.3 & 8.5 mm (other height upon request)

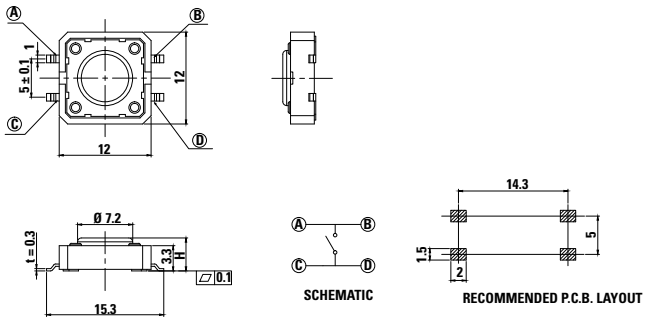

© 2025 Littelfuse, Inc.
Specifications are subject to change without notice.
Revised: VL 09/15/25

Downloaded from Arrow.com.

PTS125 Series
12 mm Tactile Switches

THT Version without Pegs with Square Snap Fit Actuator H = 7.3 mm

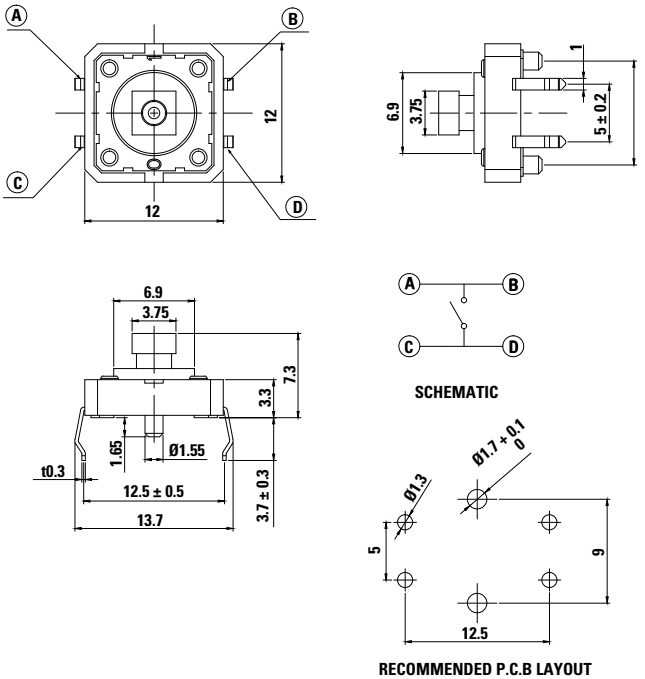

RECOMMENDED P.C.B LAYOUT

SMT Version with Pegs with Square Snap Fit Actuator and Pegs H = 7.3 mm

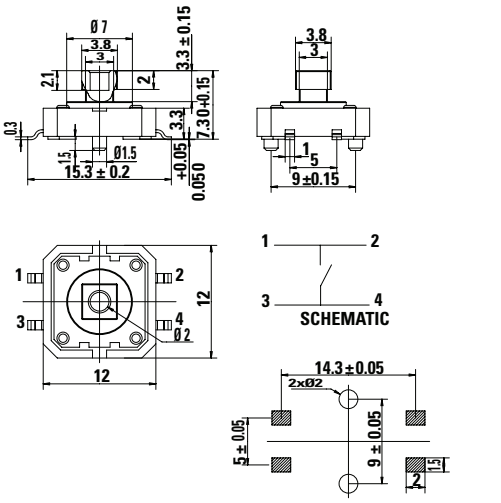

RECOMMENDED PCB LAYOUT

SMT Version without Pegs with Square Snap Fit Actuator and Pegs H = 7.3 mm

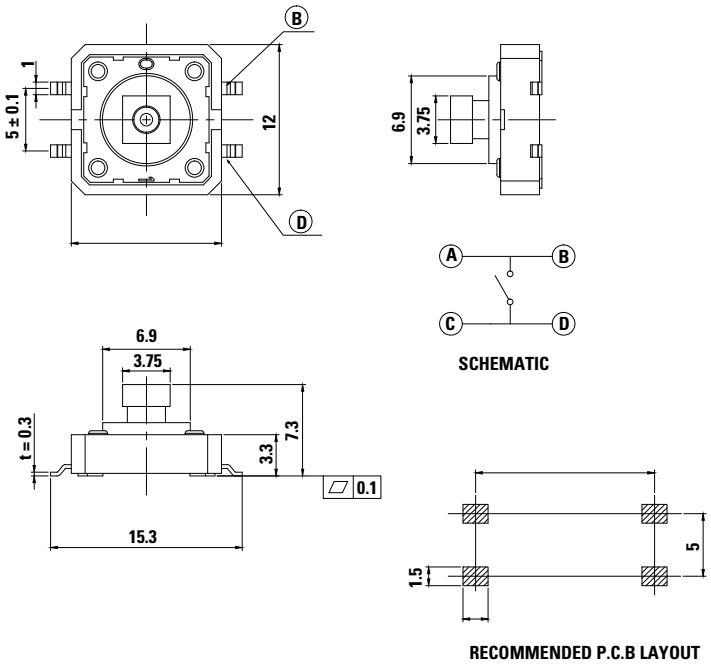

RECOMMENDED P.C.B LAYOUT

© 2025 Littelfuse, Inc.
Specifications are subject to change without notice.
Revised: VL 09/15/25

Downloaded from Arrow.com.

PTS125 Series
12 mm Tactile Switches

THT Version with Round Ribbed Actuator H = 12.0 mm

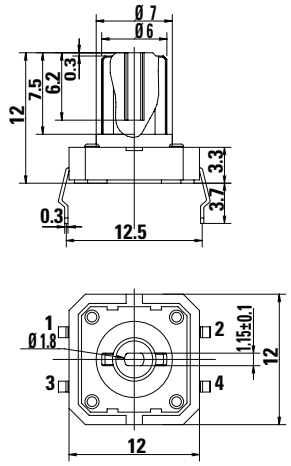

SMT Version with Round Ribbed Actuator H = 12.0 mm

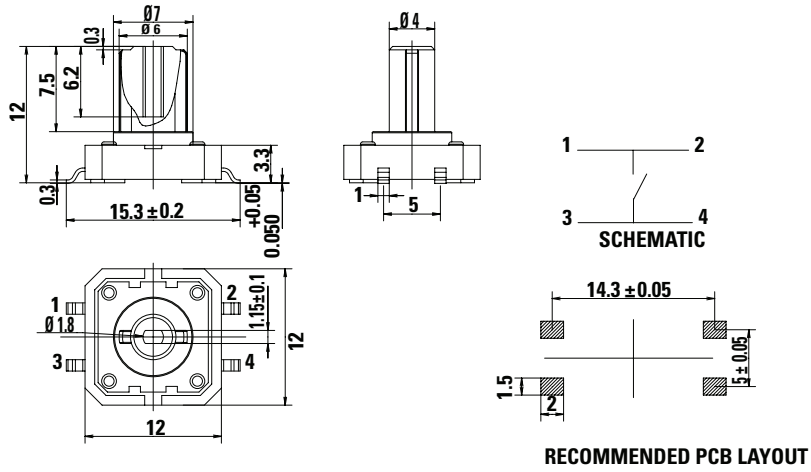

© 2025 Littelfuse, Inc.
Specifications are subject to change without notice.
Revised: VL 09/15/25

Downloaded from Arrow.com.

PTS125 Series
12 mm Tactile Switches

Ordering Number

Our easy build-a-switch concept allows you to mix and match options to create the switch you need. To order, select desired option from each category and and place it in the appropriate box.

Standard Version: 200,000 Life

PTS125 - S - x - x - xx - x - x - LFS

Style
S: Straight, top actuated

Actuator Shape
None: Round
J: Snap fit 73 height only

Acutation Force
M: 180 grams
K: 250 grams

Switch Height
43: 4.3 mm round actuator
73: 7.3 mm square snap fit actuator
85: 8.5 mm round actuator
12: 12.0 mm round actuator with ribs
Other heights ith the round actuator are available upon request.
Different minium order quanitites than the stand may apply.

Pegs
None: no pegs
P: with pegs - only for SMT version in round and square snap fit actuator (not for 12 switch height)

Termination & Packaging
2: THT in bags
SMTR2: SMT in tape & reel

RoHS, silver plated

Long Life Version: 1000K to 5000K Life

PTS125 - S - x - x - xx - x - x - x - xxx - LFS

Style
S: Straight, top actuated

Actuator Shape
None: Round
J: Snap fit 73 height only

Acutation Force
L: 130 grams
M: 180 grams
K: 250 grams
R: 350 grams

Switch Height
43: 4.3 mm round actuator
73: 7.3 mm square snap fit actuator
85: 8.5 mm round actuator
12: 12.0 mm round actuator with ribs
Other heights ith the round actuator are available upon request.
Different minium order quanitites than the stand may apply.

Pegs
None: no pegs
P: with pegs

Ground Pin Option
None: no ground pin
G: with ground pin[1]

Termination & Packaging
None: THT in bags
SMTR: SMT in tape & reel

Life Cycles
21M: 1M life cycles
25M: 5M life cycles[2]

RoHS, silver plated

Notes:
1. Ground pin version design is available for SMT only
2. 5M life only for 130 gf version

Disclaimer Notice - Information furnished is believed to be accurate and reliable. However, users should independently evaluate the suitability of and test each product selected for their own applications. Littelfuse products are not designed for, and may not be used in, all applications. Read complete Disclaimer Notice at http://www.littelfuse.com/disclaimer-electronics.

© 2025 Littelfuse, Inc.
Specifications are subject to change without notice.
Revised: VL 09/15/25

Downloaded from Arrow.com.