SERIES: PSK-40E | DESCRIPTION: INTERNAL AC-DC POWER SUPPLY

FEATURES

- universal input range (90 ~ 264 Vac)
- Class B emissions (EN 55032/CISPR/FCC)
- certified to IEC/EN/UL 62368-1
- designed to meet IEC/EN 60335
- short circuit, over voltage protection
- <0.15 W no-load power consumption
- Class II
- 5,000 m operating altitude
- 2x peak load capability

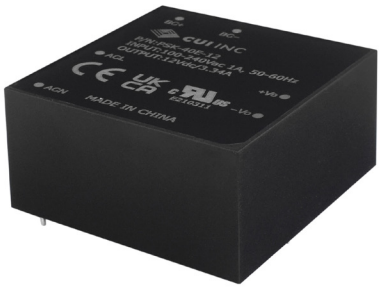

MODEL	output voltage typ (Vdc)	output current max (A)	output power max (W)	ripple and noise[1] max (mVp-p)	efficiency[2] typ (%)
PSK-40E-5	5	6.00	30	100	87
PSK-40E-12	12	3.34	40	120	90
PSK-40E-15	15	2.67	40	150	90
PSK-40E-24	24	1.67	40	240	90
PSK-40E-36	36	1.11	40	360	90
PSK-40E-48	48	0.83	40	480	90

Notes: 1. At full load, nominal input, 20 MHz bandwidth oscilloscope with 0.1μF ceramic capacitor and 10 μF electrolytic capacitor.
2. At 230 Vac input.
3. PL (peak load function) Lasting time < 10 seconds with a maximum 10% duty cycle and must add external 68uF / 400V capacitor to BC+& BC-.
4. All specifications are measured at Ta=25°C, humidity <75%, nominal input voltage, and rated output load unless otherwise specified.

PART NUMBER KEY

PSK - 40E - XX

Base Number — Output Voltage

Please read our datasheet & drawing disclaimer here.

Downloaded from Arrow.com.

INPUT

parameter	conditions/description	min	typ	max	units
voltage	ac input dc input	90 120		264 370	Vac Vdc
frequency		47	50~60	63	Hz
current	at 100 Vac, full load			1	A
inrush current	at 240 Vac, full load			70	A
leakage current				0.25	mA
no load power consumption				0.15	W

OUTPUT

parameter	conditions/description	min	typ	max	units
capacitive load	5 Vdc output model 12 Vdc output model 15 Vdc output model 24 Vdc output model 36 Vdc output model 48 Vdc output model			6,000 3,330 2,650 1,650 1,090 810	µF µF µF µF µF µF
output voltage set point	5 Vdc output model 12 Vdc output model 15 Vdc output model 24 Vdc output model 36 Vdc output model 48 Vdc output model	4.90 11.88 14.85 23.76 35.64 47.52		5.10 12.12 15.15 24.24 36.36 48.48	Vdc Vdc Vdc Vdc Vdc Vdc
voltage accuracy	5 Vdc output model all other output models		±2 ±1		% %
line regulation	high line to low line			±0.5	%
load regulation	10 % to 100 % load			±1.0	%
hold-up time	at 115 Vac		10		ms
switching frequency			65		kHz

PROTECTIONS

parameter	conditions/description	min	typ	max	units
over voltage protection	TVS component to clamp output voltage 5 Vdc output model 12 Vdc output model 15 Vdc output model 24 Vdc output model 36 Vdc output model 48 Vdc output model		 6.8 15.0 18.0 30.0 43.0 56.0		 Vdc Vdc Vdc Vdc Vdc Vdc
short circuit protection	auto recovery				

SAFETY & COMPLIANCE

parameter	conditions/description	min	typ	max	units
isolation voltage	input to output, for 1 minute			3,000	Vac
safety approvals	certified to 62368-1: IEC, EN, UL designed to meet 60335-1: EN				
safety class	Class II				
EMC	EN 55032, EN 61000-3-2, EN 61000-3-3, EN 61000-6-3, EN 61000-6-4, 47 CFR FCC Part 15 Subpart B, Class B				
EMC immunity	EN 55035:2017+A11:2020, EN 61204-3:2000, EN 61000-6-1:2019, EN 61000-6-2:2019, perf. Criteria A				
conducted emissions	EN 55032:2015+A11:2020, EN 61000-6-3:2012, 47 CFR FCC Part 15 Subpart B, Class B				
radiated emissions	EN 55032:2015+A11:2020, EN 61000-6-3:2012, 47 CFR FCC Part 15 Subpart B, Class B				
ESD	IEC 61000-4-2:2008, Air discharge: ±8 kV, Contact discharge: ±4 kV, perf. Criteria A				

Downloaded from Arrow.com.

SAFETY & COMPLIANCE

parameter	conditions/description	min	typ	max	units
EFT/burst	IEC 61000-4-4:2012, ±2 kV, perf. Criteria A				
surge	IEC 61000-4-5:2014+A1:2017, L-N: ±1 kV, perf. Criteria A				
voltage dips	IEC 61000-4-11:2020, Dip: 30% 10 ms, Dip: 60% 100 ms, Dip >95% 5000 ms, perf. Criteria A				
voltage interruption	IEC 61000-4-11:2020, >95% 5000 ms, perf. Criteria B				
MTBF	as per MIL-HDBK-217F at 25°C as per Telcordia SR 332 at 25°C	390,000 3,170,000			hours hours
RoHS	yes				

ENVIRONMENTAL

parameter	conditions/description	min	typ	max	units
operating temperature	see derating curve	-40		85	°C
storage temperature		-40		85	°C
storage humidity	non-condensing	0		93	%
altitude	IEC/EN/UL 62368-1 OVC II designed to meet EN 60335-1 OVC II			5,000 2,000	m m

MECHANICAL

parameter	conditions/description	min	typ	max	units
dimensions	2.140 x 2.140 x 1.043 [54.37 x 54.37 x 26.50 mm]				inch
weight			142		g

DERATING CURVE

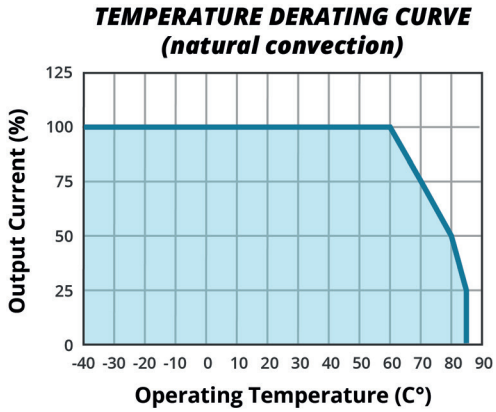

Downloaded from Arrow.com.

MECHANICAL DRAWING

units: inch [mm]
tolerance: inches: x.xx = ±0.03, x.xxx = ±0.02
mm: x.x - ±0.7, x.xx = ±0.5

PIN CONNECTIONS	
PIN	Function
1	AC(L)
2	AC(N)
3	+Vout
4	-Vout
5	BC+
6	BC-

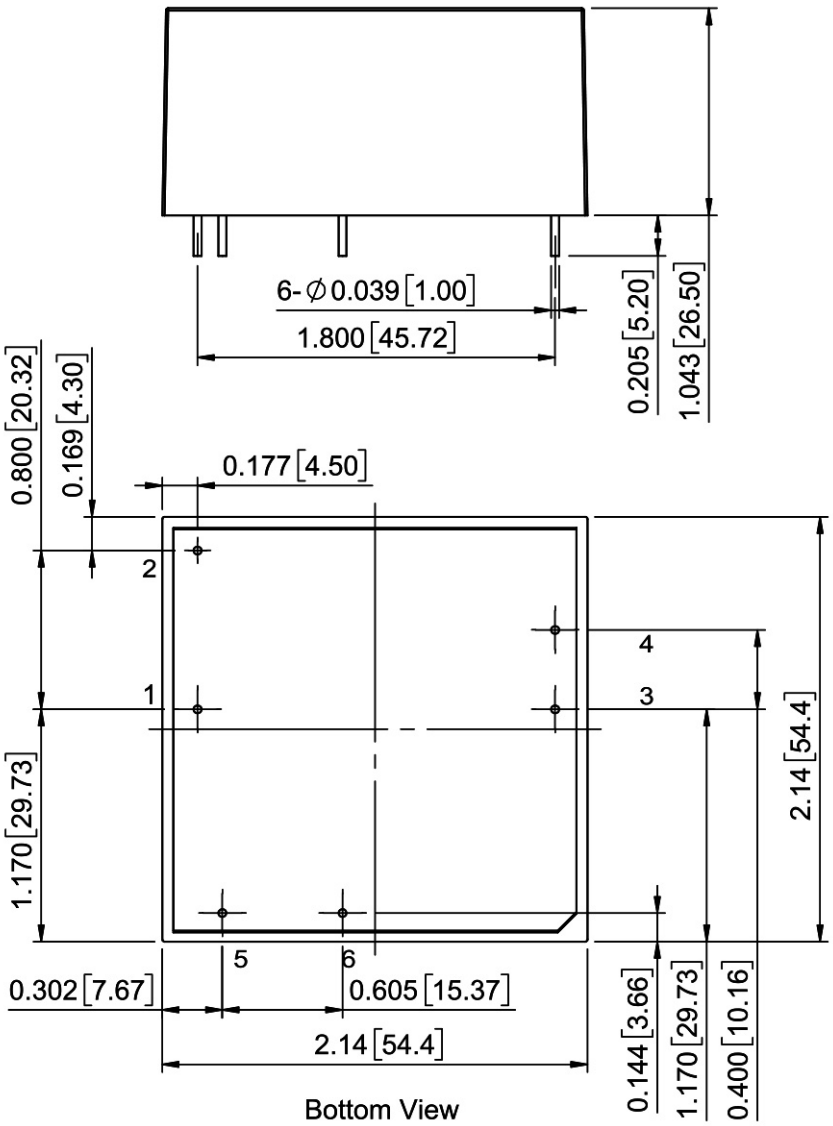

Downloaded from Arrow.com.

EFFICIENCY CURVES

EFFICIENCY VS OUTPUT LOAD (PSK-40E-5)

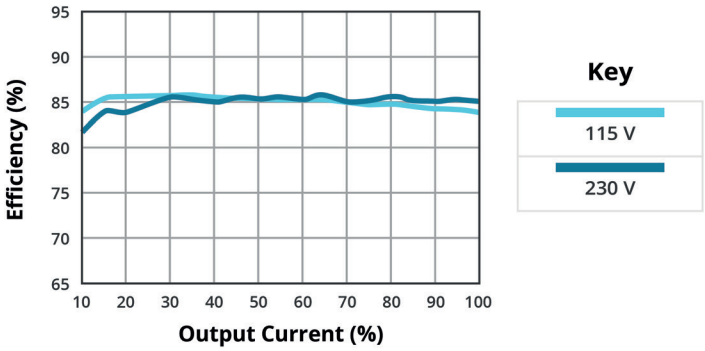

EFFICIENCY VS OUTPUT LOAD (PSK-40E-12)

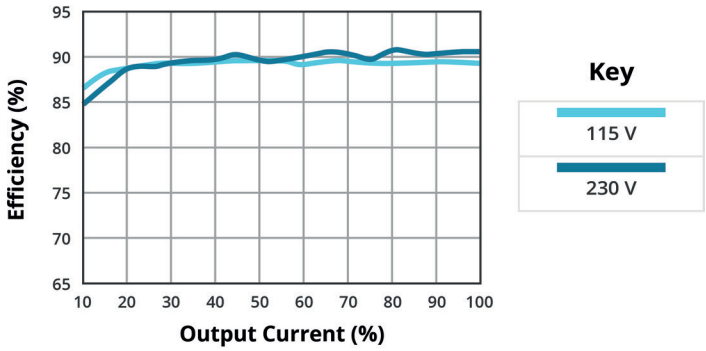

EFFICIENCY VS OUTPUT LOAD (PSK-40E-15)

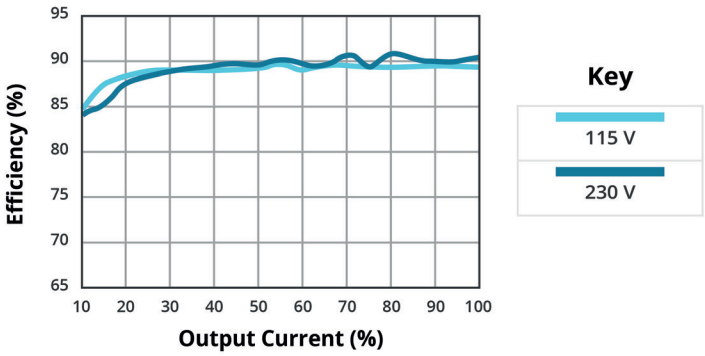

EFFICIENCY VS OUTPUT LOAD (PSK-40E-24)

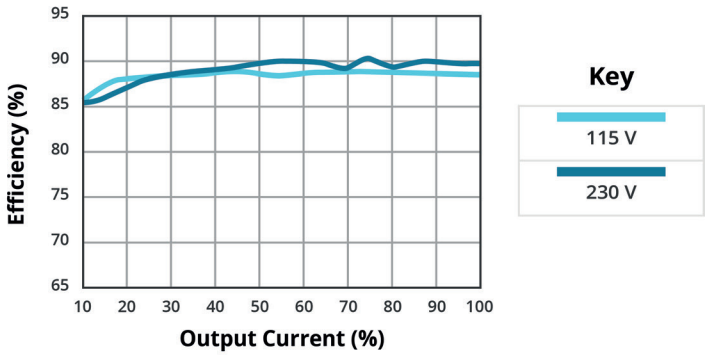

EFFICIENCY VS OUTPUT LOAD (PSK-40E-36)

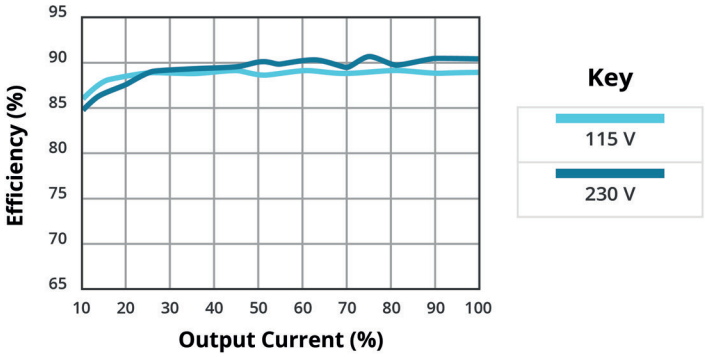

EFFICIENCY VS OUTPUT LOAD (PSK-40E-48)

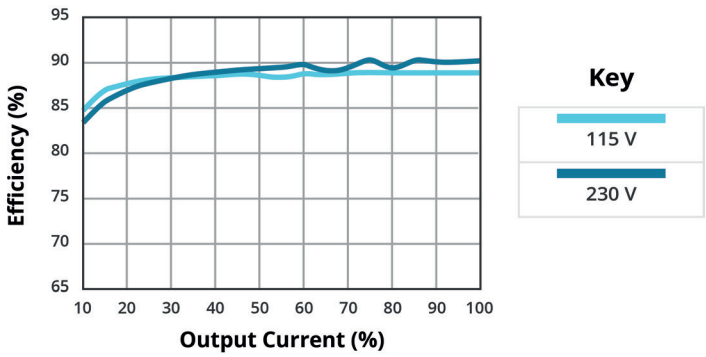

Downloaded from Arrow.com.

ELECTRICAL BLOCK DIAGRAM

Figure 1

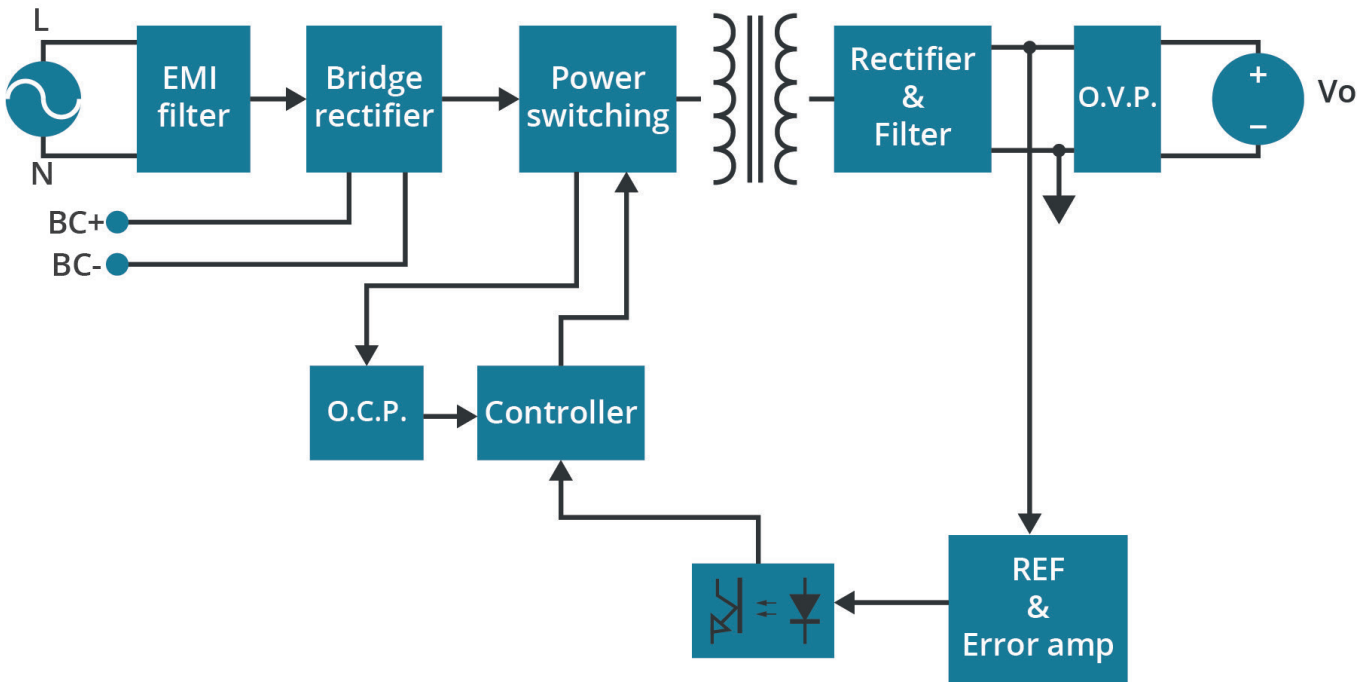

PEAK LOAD FUNCTION

The series includes a peak load function capable of delivering twice its rated power.
If Vin < 200 Vac then a 68 µF, 400 Vdc capacitor needs to be placed on the BC+ and BC- pins to support peak load.
If Vin > 200 Vac then the supply supports peak load without the additional capacitor.
The peak load current must be less than 10 seconds and less than 10% duty cycle.
When operating with peak load, the non-peak load level must be less than 80% of the rated output power.

Figure 2

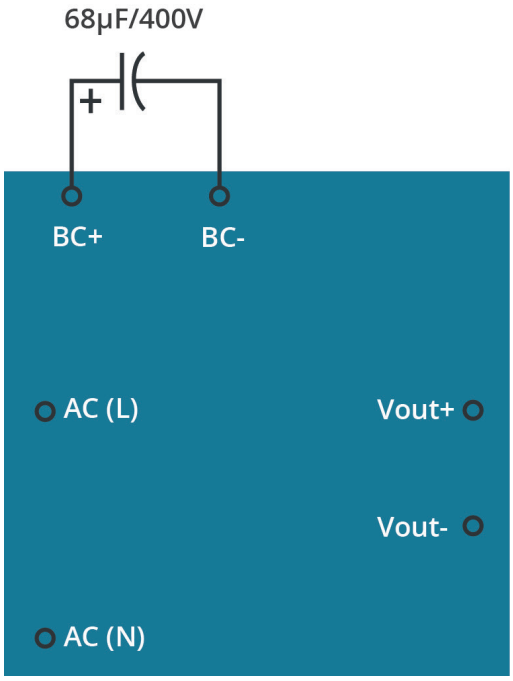

Downloaded from Arrow.com.

CLASS I EMI RECOMMENDED CIRCUIT

The series requires additional inductance and YCap to comply with EN 55032 Class B standards under Class I test conditions. If customers are using Class II systems, this section can be disregarded.

Figure 3

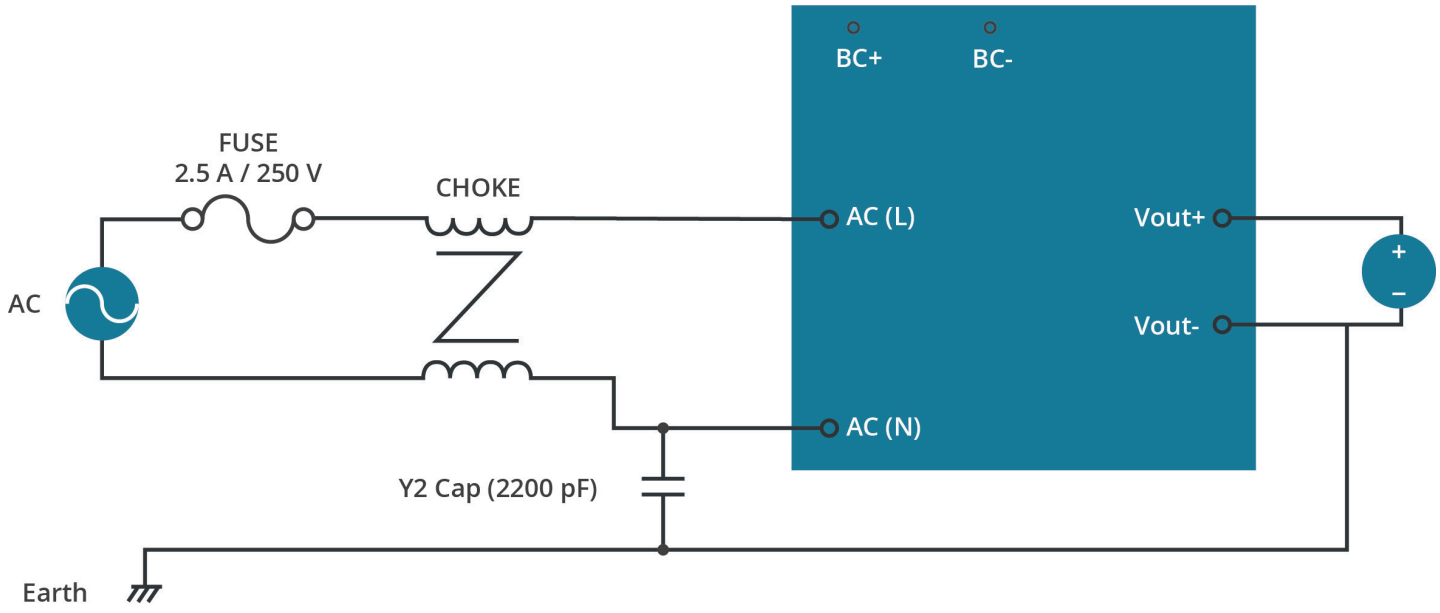

Downloaded from Arrow.com.

REVISION HISTORY

rev.	description	date
1.0	initial release	10/17/2024

The revision history provided is for informational purposes only and is believed to be accurate.

CUI INC
a bel group

Headquarters
15575 SW Sequoia Pkwy #100
Portland, OR 97224
800.275.4899

Fax 503.612.2383
cui.com
techsupport@cui.com

CUI offers a two (2) year limited warranty. Complete warranty information is listed on our website.

CUI reserves the right to make changes to the product at any time without notice. Information provided by CUI is believed to be accurate and reliable. However, no responsibility is assumed by CUI for its use, nor for any infringements of patents or other rights of third parties which may result from its use.

CUI products are not authorized or warranted for use as critical components in equipment that requires an extremely high level of reliability. A critical component is any component of a life support device or system whose failure to perform can be reasonably expected to cause the failure of the life support device or system, or to affect its safety or effectiveness.

Downloaded from Arrow.com.