NOTES:

1. MATERIALS AND FINISHES:
   SMP RA PLUG - BeCu, GOLD PLATING
   CABLE - 0.047" CONFORMABLE

2. ELECTRICAL:
   A. IMPEDANCE: 50 OHM

3. PACKAGING:
   A. QUANTITY: SINGLE PACK
   B. MARKING: BAG TO BE MARKED
      "AMPHENOL RF, 95-725-121-XXX AND DATE CODE".

THIRD ANGLE PROJ.

REVISIONS

REV	DESCRIPTION	DATE	ECO	APPR
A	RELEASE TO MFG.	11-Jun-19	11801	SKP

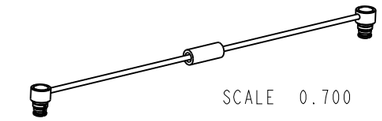

SCALE 0.700

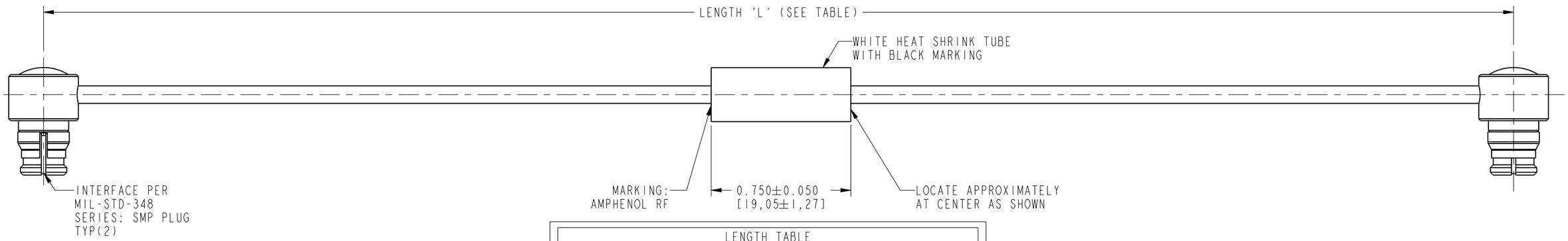

LENGTH TABLE		
PART NUMBER (IMPERIAL)	PART NUMBER (METRIC)	LENGTH 'L' IN INCHES [METERS]
-	95-725-121M005	1.97 [0.050]
95-725-121-003	-	3.00 [0.076]
-	95-725-121M010	3.94 [0.100]
95-725-121-004	-	4.00 [0.102]
95-725-121-005	-	5.00 [0.127]
-	95-725-121M015	5.91 [0.150]
95-725-121-006	-	6.00 [0.152]
95-725-121-007	-	7.00 [0.178]
-	95-725-121M020	7.87 [0.200]
95-725-121-008	-	8.00 [0.203]
95-725-121-009	-	9.00 [0.229]
-	95-725-121M025	9.84 [0.250]
95-725-121-010	-	10.00 [0.254]
95-725-121-011	-	11.00 [0.279]
-	95-725-121M030	11.81 [0.300]
95-725-121-012	-	12.00 [0.305]
95-725-121-018	-	18.00 [0.457]
-	95-725-121M050	19.69 [0.500]
95-725-121-024	-	24.00 [0.610]
-	95-725-121M075	29.53 [0.750]
95-725-121-036	-	36.00 [0.914]
-	95-725-121M100	39.37 [1.000]
95-725-121-048	-	48.00 [1.219]
-	95-725-121M200	78.74 [2.000]
-	95-725-121M400	157.48 [4.000]

TOLERANCE TABLE	
LENGTH IN INCHES/FT [METERS]	TOLERANCE
0" - 23.90" [0 - 0.607]	±0.25" [0.006]
24.00" - 59.00" [0.610 - 1.499]	±0.50" [0.013]
5.0' - 24.9' [1.524 - 7.617]	±2.5%
25.0' & UP [7.620 & UP]	±5.0%

DESIGN REQUIREMENTS:

- [X] FREQUENCY: DC - 20 GHz
- [ ] VSWR: ____ MAX.
- [ ] INS. LOSS: ____ dB MAX.
- [X] CONTINUITY
- [X] HI-POT: 500 VRMS
- [ ] OTHER

CUSTOMER OUTLINE DRAWING

ALL OTHER SHEETS ARE FOR INTERNAL USE ONLY

UNLESS OTHERWISE SPECIFIED, DIMENSIONS ARE IN INCHES AND TOLERANCES ARE:
2 PLACE DECIMAL ±.015 (0,381 mm) | 3 PLACE DECIMAL ±.005 (0,127 mm) | ANGLES ± 1°

NOTICE - These drawings, specifications, or other data (1) are, and remain the property of Amphenol corp. (2) must be returned upon request; and (3) are confidential and not to be disclosed to any person other than those to whom they are given by Amphenol Corp. the furnishing of these drawings, specifications, or other data by Amphenol Corp., or to any other person to anyone for any purpose is not to be regarded by implication or otherwise in any manner licensing, granting rights to permitting such holder or any other person to manufacture, use or sell any product, process or design, patented or otherwise, that may in any way be related to or disclosed by said drawings, specifications, or other data.

MATERIAL
SEE NOTES

REFERENCE
EAR # 9091

CONFIGURATION LEVEL: In Work

FINISH

DRAWN KRISHNA S	DATE 21-May-19	
ENGINEER KRISHNA S	DATE 21-May-19	
APPROVED K.CAPOZZI	DATE 11-Jun-19	
CAD FILE		

TITLE
SMP RA PLUG TO
SMP RA PLUG USING
0.047" CONFORMABLE CABLE
VARIOUS LENGTH

SCALE: 3.7:1.0 | SHEET 2 OF 2

DWG SIZE B | REV A

Amphenol RF
www.amphenolrf.com

DRAWING NO.95-725-121-XXX
ITEM NO.95-725-121-XXX
PART NO.95-725-121-XXX

Downloaded from Arrow.com.