Data Sheet | Item Number: 736-416

Double-deck PCB terminal block; 2.5 mm²; Pin spacing 5.08 mm; 32-pole; CAGE CLAMP®; orange

https://www.wago.com/736-416

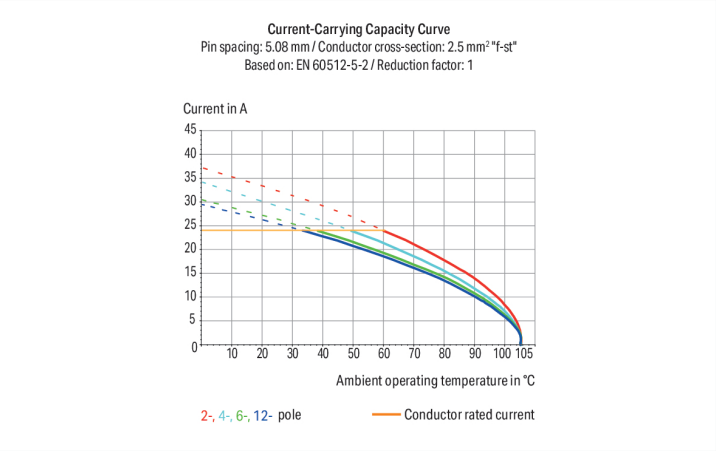

Color: orange

Similar to illustration

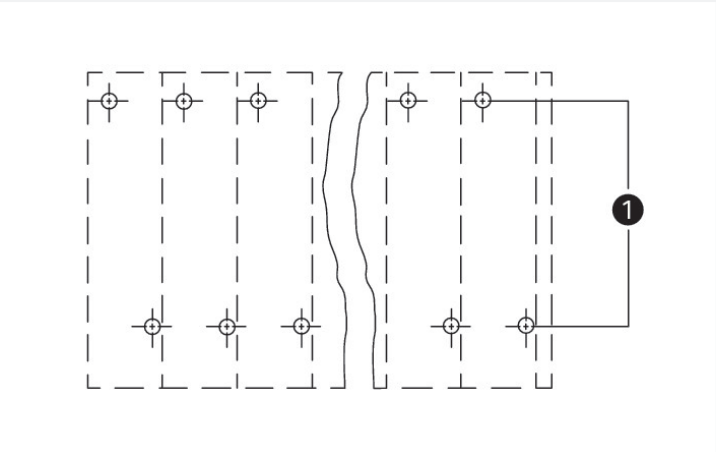

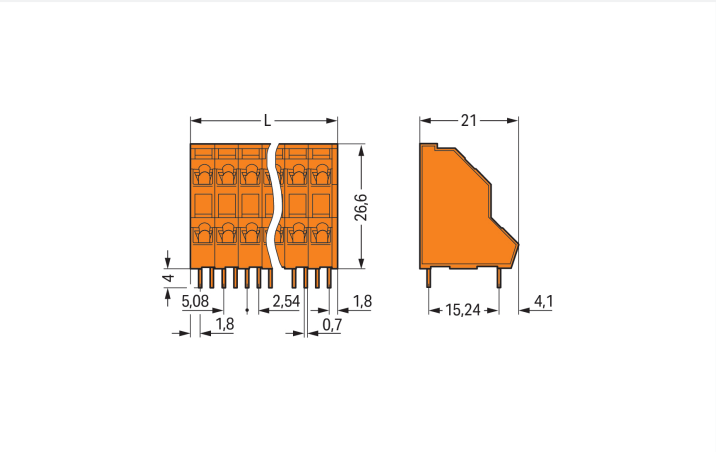

(1) Solder pins staggered by half the pin spacing

Dimensions in mm
L = ((pole no. / 2) x pin spacing) + 1.1 mm

PCB terminal block, 736 Series, 45 °conductor entry to board

This PCB terminal block (item number 736-416) streamlines wire connections, making them both quick and easy. It is a universal connector that can be used practically anywhere, for example, as a pluggable PCB connector, panel feedthrough header, connector for rail-mount terminal blocks, or a floating connector for different mounting methods. Strip lengths must be between 5 and 6 mm when connecting conductors to this PCB terminal block. Featuring one conductor terminal along with CAGE CLAMP®, this connector delivers reliable performance. Our CAGE CLAMP® connection provides a safe and maintenance-free way to connect all types of conductors. You do not need to prepare the conductor in any way, such as crimping ferrules. The item's dimensions are (82.38 x 30.6 x 21) mm (width x height x depth). This PCB terminal block is suitable for conductor cross sections ranging from 0.08 mm² to 2.5 mm².

Tin is used for coating the contact surfaces. This PCB terminal block is operated with an operating tool. The PCB terminal block is designed for THT soldering. Insert the conductor into the board at a 45° angle..

Downloaded from Arrow.com.

Notes

Variants:	Other pole numbers Other colors Mixed-color PCB connector strips Direct marking Other versions (or variants) can be requested from WAGO Sales or configured at https://configurator.wago.com/.

Electrical data

Ratings	between the modules		
Ratings per	IEC/EN 60664-1	IEC/EN 60664-1	IEC/EN 60664-1
Overvoltage category	III	III	II
Pollution degree	3	2	2
Nominal voltage	250 V	320 V	630 V
Rated impulse withstand voltage	4 kV	4 kV	4 kV
Rated current	21 A	21 A	21 A

Ratings	between the decks		
Ratings per	IEC/EN 60664-1	IEC/EN 60664-1	IEC/EN 60664-1
Overvoltage category	III	III	II
Pollution degree	3	2	2
Nominal voltage	320 V	320 V	630 V
Rated impulse withstand voltage	4 kV	4 kV	4 kV
Rated current	21 A	21 A	21 A

Approvals per	UL 1059		
Use group	B	C	D
Rated voltage	300 V	-	300 V
Rated current	10 A	-	10 A

Approvals per	CSA		
Use group	B	C	D
Rated voltage	300 V	-	300 V
Rated current	10 A	-	10 A

Connection Data

Clamping units	32
Total number of potentials	32
Number of connection types	1
Number of levels	2

Connection 1

Connection technology	CAGE CLAMP®
Actuation type	Operating tool
Solid conductor	0.08 … 2.5 mm² / 28 … 12 AWG
Fine-stranded conductor	0.08 … 2.5 mm² / 28 … 12 AWG
Fine-stranded conductor; with insulated ferrule	0.25 … 1.5 mm²
Fine-stranded conductor; with uninsulated ferrule	0.25 … 2.5 mm²
Note (conductor cross-section)	12 AWG: THHN, THWN
Strip length	5 … 6 mm / 0.2 … 0.24 inches
Conductor connection direction to PCB	45 °
Pole number	32

Physical data

Pin spacing	5.08 mm / 0.2 inches
Width	82.38 mm / 3.243 inches
Height	30.6 mm / 1.201 inches
Height from the surface	26.6 mm / 1.043 inches
Depth	21 mm / 0.827 inches
Solder pin length	4 mm
Solder pin dimensions	0.7 x 0.7 mm
Drilled hole diameter	1.3 $^{(+0.1)}$ mm

 Continued on next page
Downloaded from Arrow.com.

PCB contact

PCB contact	THT
Solder pin arrangement	within the terminal block (staggered)
Number of solder pins per potential	1

Material data

Note (material data)	Information on material specifications can be found here
Color	orange
Material group	I
Insulation material (main housing)	Polyamide (PA66)
Flammability class per UL94	V0
Clamping spring material	Chrome-nickel spring steel (CrNi)
Contact material	Electrolytic copper (E_{Cu})
Contact Plating	Tin
Fire load	0.507 MJ
Weight	37 g

Environmental requirements

Limit temperature range	-60 … +105 °C

Commercial data

Product Group	4 (Printed Circuit Connectors)
PU (SPU)	21 pcs
Packaging type	Box
Country of origin	PL
GTIN	4044918916073
Customs tariff number	85369010000

Product Classification

UNSPSC	39121409
eCl@ss 10.0	27-44-04-01
eCl@ss 9.0	27-44-04-01
ETIM 9.0	EC002643
ETIM 10.0	EC002643
ECCN	NO US CLASSIFICATION

Environmental Product Compliance

RoHS Compliance Status	Compliant,No Exemption

Approvals / Certificates

General approvals

Approval	Standard	Certificate Name
CCA DEKRA Certification B.V.	EN 60947	2160584.37
CCA DEKRA Certification B.V.	EN 60947	NTR NL-7143
CCA DEKRA Certification B.V.	IEC 60947-7-4	NTR NL-7814

General approvals

CSA DEKRA Certification B.V.	C22.2 No. 158	70049157
UR Underwriters Laboratories Inc.	UL 1059	E45172

Downloaded from Arrow.com.

Declarations of conformity and manufacturer's declarations

Approval	Standard	Certificate Name
EU-Declaration of Conformity WAGO GmbH & Co. KG	-	-
UK-Declaration of Conformity WAGO GmbH & Co. KG	-	-

Approvals for marine applications

Approval	Standard	Certificate Name
ABS American Bureau of Shipping	-	24-0095975-PDA
BV Bureau Veritas S.A.	IEC 60998	11915/E0 BV
DNV DNV GL SE	-	TAE000016Z

Downloads

Environmental Product Compliance

Compliance Search

Environmental Product Compliance 736-416

Documentation

Additional Information

Technical Section	03.04.2019	pdf 2027.26 KB	
Gebrückte Klemmenleisten für Leiterplatten		pdf 303.71 KB	

CAD/CAE-Data

CAD data

2D/3D Models 736-416

CAE data

EPLAN Data Portal 736-416

ZUKEN Portal 736-416

PCB Design

Symbol and Footprint via SamacSys 736-416

Symbol and Footprint via Ultra Librarian 736-416

Downloaded from Arrow.com.

1 Compatible Products

1.1 Optional Accessories

1.1.1 Ferrule

1.1.1.1 Ferrule

Item No.: 216-321
Ferrule; Sleeve for 0.25 mm² / AWG 24; insulated; electro-tin plated; yellow

Item No.: 216-151
Ferrule; Sleeve for 0.25 mm² / AWG 24; uninsulated; electro-tin plated; silver-colored

Item No.: 216-322
Ferrule; Sleeve for 0.34 mm² / 22 AWG; insulated; electro-tin plated; light turquoise

Item No.: 216-152
Ferrule; Sleeve for 0.34 mm² / 22 AWG; uninsulated; electro-tin plated; silver-colored

Item No.: 216-221
Ferrule; Sleeve for 0.5 mm² / 20 AWG; insulated; electro-tin plated; white

Item No.: 216-121
Ferrule; Sleeve for 0.5 mm² / AWG 22; uninsulated; electro-tin plated; silver-colored

Item No.: 216-222
Ferrule; Sleeve for 0.75 mm² / 18 AWG; insulated; electro-tin plated; gray

Item No.: 216-122
Ferrule; Sleeve for 0.75 mm² / 18 AWG; uninsulated; electro-tin plated; silver-colored

Item No.: 216-223
Ferrule; Sleeve for 1 mm² / AWG 18; insulated; electro-tin plated; red

Item No.: 216-123
Ferrule; Sleeve for 1 mm² / AWG 18; uninsulated; electro-tin plated; silver-colored

Item No.: 216-224
Ferrule; Sleeve for 1.5 mm² / AWG 16; insulated; electro-tin plated; black

Item No.: 216-124
Ferrule; Sleeve for 1.5 mm² / AWG 16; uninsulated; electro-tin plated

1.1.2 Marking

1.1.2.1 Marking strip

Item No.: 210-332/508-202
Marking strips; as a DIN A4 sheet; MARKED; 1-16 (160x); Height of marker strip: 3 mm; Strip length 182 mm; Horizontal marking; Self-adhesive; white

Item No.: 210-332/508-205
Marking strips; as a DIN A4 sheet; MARKED; 1-32 (80x); Height of marker strip: 3 mm; Strip length 182 mm; Horizontal marking; Self-adhesive; white

Item No.: 210-332/508-204
Marking strips; as a DIN A4 sheet; MARKED; 17-32 (160x); Height of marker strip: 3 mm; Strip length 182 mm; Horizontal marking; Self-adhesive; white

Item No.: 210-332/508-206
Marking strips; as a DIN A4 sheet; MARKED; 33-48 (160x); Height of marker strip: 3 mm; Strip length 182 mm; Horizontal marking; Self-adhesive; white

1.1.3 Test and measurement

1.1.3.1 Testing accessories

Item No.: 231-426
Testing plug module with contact stud; orange

Item No.: 231-455
Testing plug module with contact stud; Pin spacing 5.08 mm / 0.2 in; 2,50 mm²; orange

1.1.4 Tool

1.1.4.1 Operating tool

Item No.: 210-658
Operating tool; Blade: 3.5 x 0.5 mm; with a partially insulated shaft; angled; short; multicoloured

Item No.: 210-720
Operating tool; Blade: 3.5 x 0.5 mm; with a partially insulated shaft; multicoloured

Item No.: 210-657
Operating tool; Blade: 3.5 x 0.5 mm; with a partially insulated shaft; short; multicoloured

 Continued on next page

Downloaded from Arrow.com.

Installation Notes

Conductor termination

Inserting a conductor via 3.5 mm screwdriver.
Screwdriver actuation parallel to conductor entry

Installation

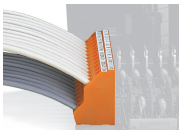

Low space requirements due to high-density design
Double-deck PCB terminal strip – 736 Series

Possible combination:
Double- (736 Series) and triple-deck PCB terminal strips (737 Series) upon request

Possible combination:
Double- (736 Series) and triple-deck PCB terminal strips (737 Series) upon request

Possible combination:
Double- (737 Series) and quadruple-deck PCB terminal strips (738 Series) upon request

Possible combination:
Double- (737 Series) and quadruple-deck PCB terminal strips (738 Series) upon request

Marking

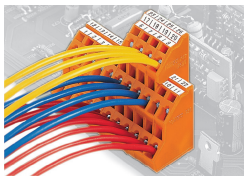

Testing

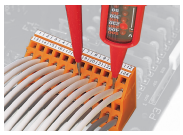

Testing via contact area above the conductors.

Downloaded from Arrow.com.