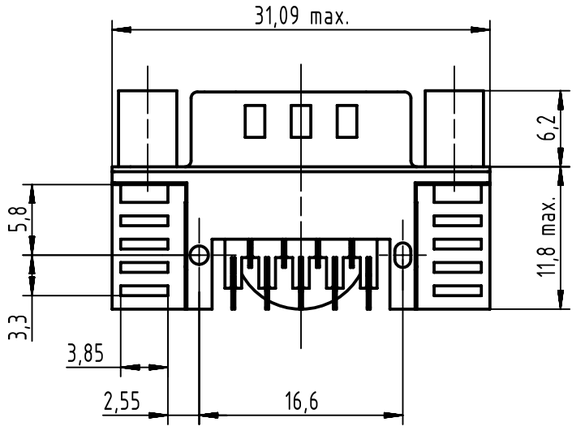

PCB layout, component side (thickness 1,6 min)

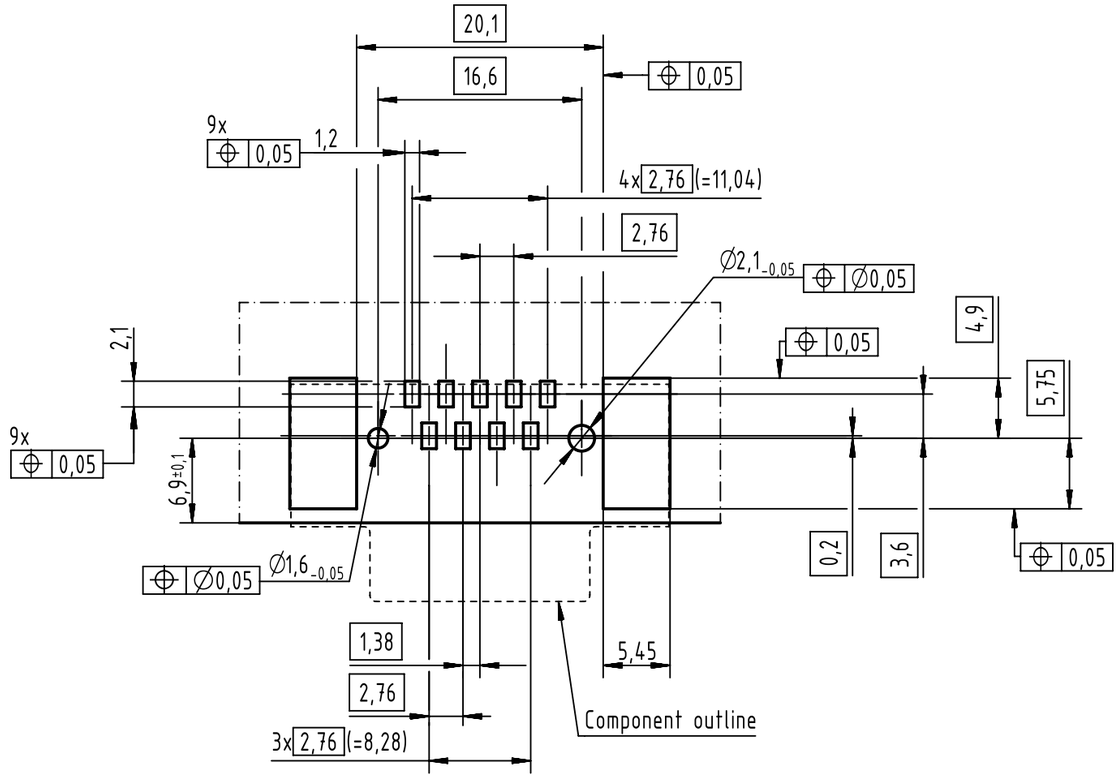

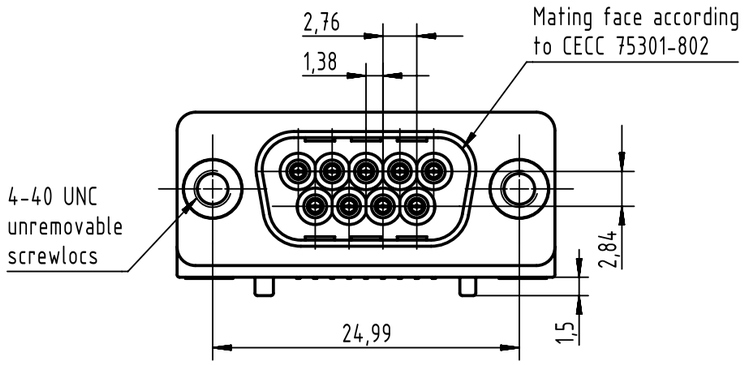

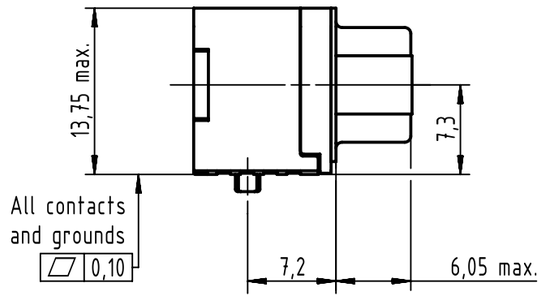

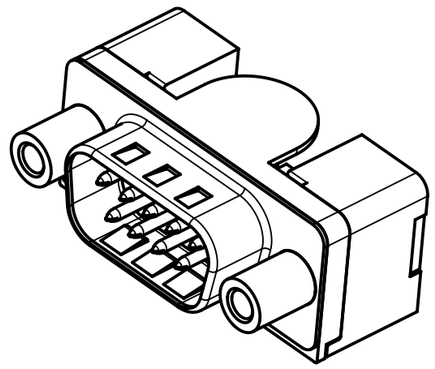

0955 166 6822 333	2	4-40 UNC	Black insulator	Samples
0955 166 3822 741	1	4-40 UNC	Black insulator	Reel Packaging (140 connectors)
0955 166 6822 741	2			
0955 166 7822 741	3			
0955 166 3821 741	1	M3		
0955 166 6821 741	2			
0955 166 7821 741	3			
Part number	PL	Thread	Index designation	

Max. Temperature: 260°C during 10 seconds
Find further technical information on DS 09550200301

All Dimensions in mm Original Size DIN A3	Scale 2:1	Free size tol.		Ref. Sub.	
All rights reserved Department EL PD	Created by ZHUANGJ	Inspected by LUOK	Standardisation HOFFMANN	Date 2018-11-16	State Final Release
HARTING Electronics GmbH D-32339 Espelkamp	Title D-Sub angled STD 9-pole male with screwlock				Doc-Key / ECM-Nr. 100682919/UGD/000/B 500000141375
	Type TB	Number 0955166X82X		Rev. B	Page 1/1

A3

Downloaded from Arrow.com.