PRODUCT CATALOG

HIROSE ELECTRIC CO.,LTD.

DF52 Series

0.8mm Pitch, Compact and Robust Wire-to-Board Connectors

SignalBee™

Power Supply

Robust

Compact

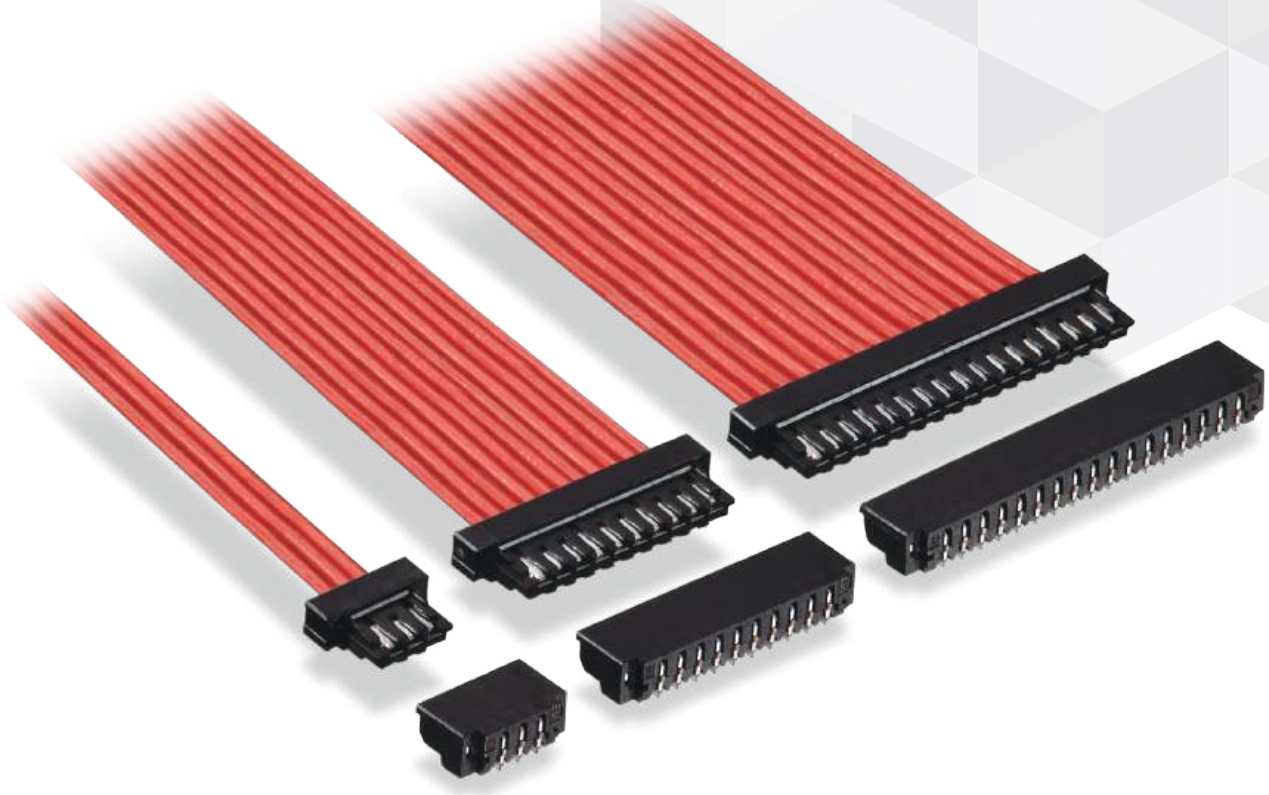

Nov.1.2026 Copyright 2026 HIROSE ELECTRIC CO., LTD. All Rights Reserved.

Product Page
https://www.hirose.com/en/product/series/DF52

Apr. 2025

Downloaded from Arrow.com.

Features

1. Small-Sized Connector

0.8mm Pitch, 1.75mm Height, 4.1mm Depth. Suitable for small-sized applications.

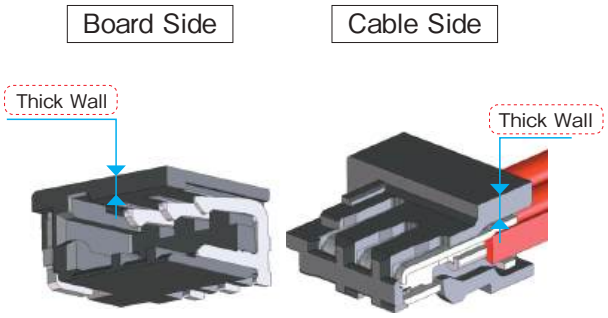

Thick Housing Walls and Compact Size.

2. Compact yet Robust Design

The housing wall thickness is secured in necessary areas while maintaining a compact size, resulting in a robust design despite its small size.

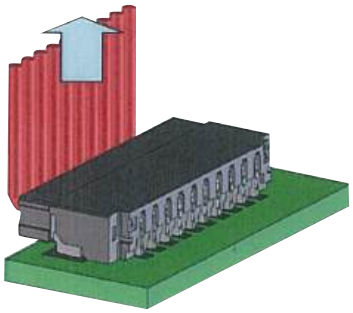

Robust design prevents damage while wire routing.

3. Suitable for High Current Applications (2.5A Max.: using 2pos. and 28 AWG)

High current in small size is supported by the use of highly conductive materials and an optimized contact force to lower contact resistance value.

Nov.1.2026 Copyright 2026 HIROSE ELECTRIC CO., LTD. All Rights Reserved.

Downloaded from Arrow.com.

4. Box shaped contact prevents deformation.

The box shaped crimp contact prevents deformation during assembly and contributes to the overall stability and robustness.



Box Shaped Contact Design

5. Visual check insures fully mated Plug and Receptacle

The housing is designed with an open side that allows for visual inspection to insure the connectors are fully mated, preventing accidental disconnect.

Incomplete Mating

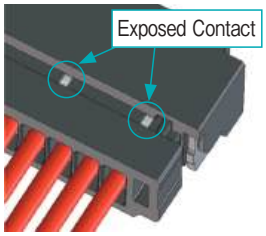

The contact is exposed in the half-mated state.

Mating Complete

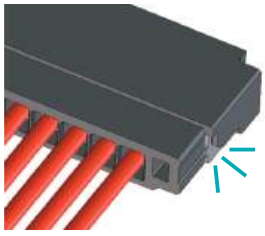

Mating is complete when the contact is no longer visible.

Allows for visual inspection of the mating process
(The mated condition can be visually checked)

6. Halogen-free

No chlorine or bromine exceeding the standard values are used in this connector.

* As defined by IEC 61249-2-21
Br: 900ppm Max. , Cl: 900ppm Max. , Br+Cl: 1500ppm Max.

Nov.1.2026 Copyright 2026 HIROSE ELECTRIC CO., LTD. All Rights Reserved.

Downloaded from Arrow.com.

Product Specifications

	No. of Pos.	28 AWG	30 AWG	32 AWG
Rated Current	2	2.5A/pin	2A/pin	1.5A/pin
	3	2A/pin	1.5A/pin	1A/pin
	4	2A/pin	1.5A/pin	1A/pin
	5	2A/pin	1.5A/pin	1A/pin
	6	1.5A/pin	1.2A/pin	0.8A/pin
	8	1.5A/pin	1.2A/pin	0.8A/pin
	10	1.5A/pin	1.2A/pin	0.8A/pin
	12	1.2A/pin	1A/pin	0.8A/pin
	14	1.2A/pin	1A/pin	0.8A/pin
	15	1.2A/pin	1A/pin	0.8A/pin
	16	1.2A/pin	1A/pin	0.8A/pin
	17	1.2A/pin	1A/pin	0.8A/pin
	20	1.2A/pin	1A/pin	0.8A/pin
Rated Voltage	100V AC/DC			

Operating Temperature (Note 1)	-40 to +85℃
Storage Temperature Range (Note 2)	-10 to +60℃
Operating Humidity Range (Note 3)	20 to 80%
Storage Humidity Range (Note 2)	40 to 70%

Note 1 : Includes the temperature rise caused by current flow.
Note 2 : The term "storage" refers to the long-term storage condition of unused products before PCB mounting.
Operating temperature/humidity range is applied to the deenergized state after mounting of PCB and the temporary storage state during transportation.
Note 3 : Use without condensation.
Note 4 : Information contained in this catalog represents general requirements for this Series.
Please contact us for the drawings and specifications for a specific part number shown.

Items	Specifications	Conditions
Insulation Resistance	100MΩ Min.	Measured at 100V DC
Withstanding Voltage	No flashover dielectric breakdown	300V AC applied for 1 min.
Contact Resistance (Under Low Voltage and Current)	10mΩ Max.	Measured at 20mV DC, 1mA (DC or 1000Hz)
Vibration Resistance	No electrical discontinuity of 1μs or more.	10 cycles in each of three axis at frequency 10-55Hz, half amplitude 0.75mm
Shock Resistance	No electrical discontinuity of 1μs or more.	Acceleration of 490 m/s^2,11ms, half-sine wave 3 directions 3 times each
Moisture Resistance	Contact Resistance: 20mΩ Max. Insulation Resistance: 100MΩ Min.	Temperature: 40±2℃ ; Humidity: 90 to 95%, for 96 hours
Temperature Cycle	Contact Resistance: 20mΩ Max. Insulation Resistance: 100MΩ Min.	(-55℃ : 30 min. → +5 to +35℃ : 2 to 3 min. → +85℃ : 30 min. → +5 to +35℃ : 2 to 3 min.) 5 cycles
Mating Durability	Contact Resistance: 20mΩ Max.	20 times
Solder Heat Resistance	No dissolution of housing parts that affect performance.	Reflow: according to the Recommended Temperature Profile Manual soldering: temperature of soldering iron at 350±10℃ for 3 seconds

Materials / Finish

Product	Part	Materials	Finish	Remarks
Receptacle	Insulator	Polyamide	Black	UL94V-0
	Contact	Copper Alloy	Tin Plating	-
Crimp Plug	Insulator	Polyamide	Black	UL94V-0
Crimp Contact	Contact	Copper Alloy	Tin Plating	-

Nov.1.2026 Copyright 2026 HIROSE ELECTRIC CO., LTD. All Rights Reserved.

Downloaded from Arrow.com.

Product Number Structure

Refer to the chart below when determining the product specifications from the product number.
Please select from the product numbers listed in this catalog when placing orders.

■ Receptacle

DF52 - # S - 0.8 H
❶ ❷ ❸ ❹ ❺

❶ Series Name	DF52	❸ Connector Type	S: Receptacle
❷ No. of Pos.	2, 3, 4, 5, 6, 8, 10, 12, 14, 15, 16, 17, 20	❹ Contact Pitch	0.8mm
		❺ Termination Style	H: SMT Right Angle Type

■ Plug Connector

DF52 - # P - 0.8 C
❶ ❷ ❸ ❹ ❺

❶ Series Name	DF52	❸ Connector Type	P: Crimp Plug
❷ No. of Pos.	2, 3, 4, 5, 6, 8, 10, 12, 14, 15, 16, 17, 20	❹ Contact Pitch	0.8mm
		❺ Termination Style	C: Crimp Plug

■ Crimp Contact

DF52 - 2832 PCF
❶ ❷ ❸

❶ Series Name	DF52	❷ Applicable Wire Size	2832: 28 to 32 AWG
		❸ Type Classification/ Packaging	PCF: Plug Crimp Contact / reel

Nov.1.2026 Copyright 2026 HIROSE ELECTRIC CO., LTD. All Rights Reserved.

Downloaded from Arrow.com.

Right Angle Receptacle



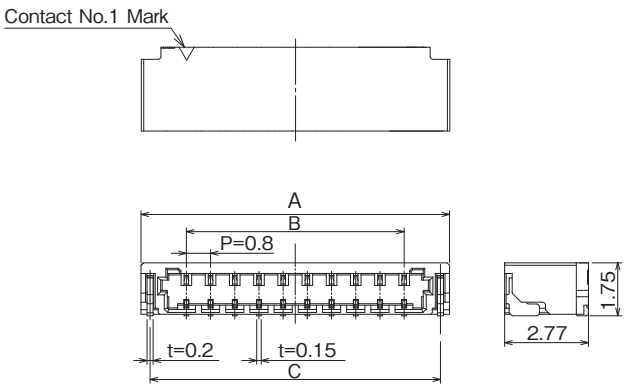

Unit : mm

Part No.	HRS No.	No. of Pos.	A	B	C	Purchase Unit
DF52-2S-0.8H(21)	CL0668-0004-5-21	2	3.8	0.8	3.2	5,000pcs per reel
DF52-3S-0.8H(21)	CL0668-0022-7-21	3	4.6	1.6	4.0	
DF52-4S-0.8H(21)	CL0668-0005-8-21	4	5.4	2.4	4.8	
DF52-5S-0.8H(21)	CL0668-0023-0-21	5	6.2	3.2	5.6	
DF52-6S-0.8H(21)	CL0668-0006-0-21	6	7.0	4.0	6.4	
DF52-8S-0.8H(21)	CL0668-0007-3-21	8	8.6	5.6	8.0	
DF52-10S-0.8H(21)	CL0668-0008-6-21	10	10.2	7.2	9.6	
DF52-12S-0.8H(21)	CL0668-0009-9-21	12	11.8	8.8	11.2	
DF52-14S-0.8H(21)	CL0668-0024-2-21	14	13.4	10.4	12.8	
DF52-15S-0.8H(21)	CL0668-0010-8-21	15	14.2	11.2	13.6	
DF52-16S-0.8H(21)	CL0668-0025-5-21	16	15.0	12.0	14.4	
DF52-17S-0.8H(21)	CL0668-0001-7-21	17	15.8	12.8	15.2	
DF52-20S-0.8H(21)	CL0668-0011-0-21	20	18.2	15.2	17.6	

[Specification Number] (21) : Tin plating, embossed packaging

● Recommended PCB Layout

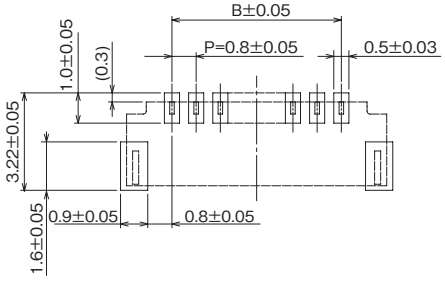

Nov.1.2026 Copyright 2026 HIROSE ELECTRIC CO., LTD. All Rights Reserved.

Downloaded from Arrow.com.

■ Packaging Specification

● 2 to 17pos.

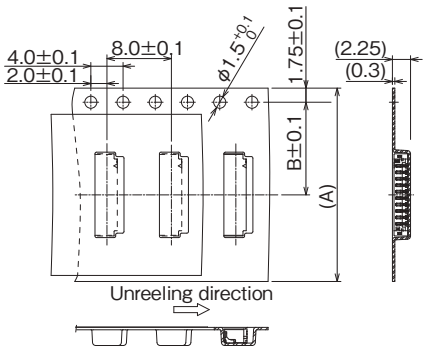

● 20pos.

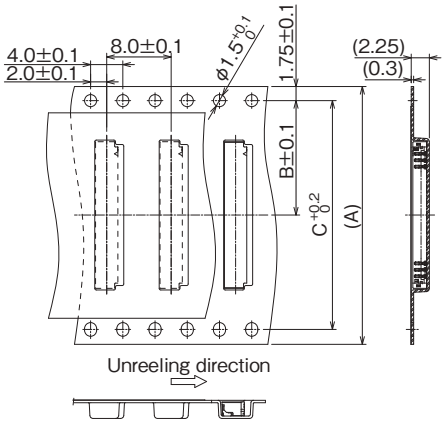

● Reel Dimensions

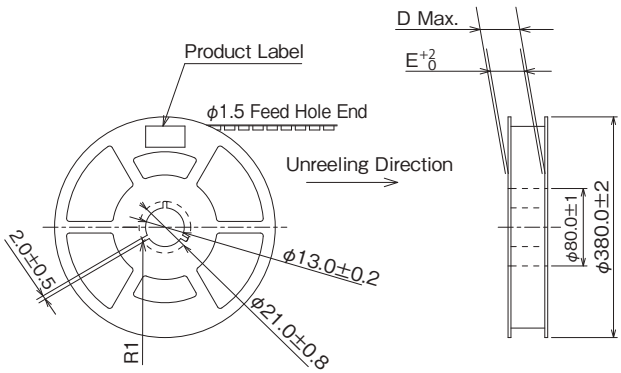

Unit : mm

Part No.	No. of Pos.	A	B	C	D	E
DF52-2S-0.8H(21)	2	16.0	7.5	-	22.4	16.4
DF52-3S-0.8H(21)	3					
DF52-4S-0.8H(21)	4					
DF52-5S-0.8H(21)	5					
DF52-6S-0.8H(21)	6					
DF52-8S-0.8H(21)	8	24.0	11.5		30.4	24.4
DF52-10S-0.8H(21)	10					
DF52-12S-0.8H(21)	12					
DF52-14S-0.8H(21)	14					
DF52-15S-0.8H(21)	15					
DF52-16S-0.8H(21)	16					
DF52-17S-0.8H(21)	17					
DF52-20S-0.8H(21)	20	32.0	14.2	28.4	38.4	32.4

Nov.1.2026 Copyright 2026 HIROSE ELECTRIC CO., LTD. All Rights Reserved.

Downloaded from Arrow.com.

Crimp Plug



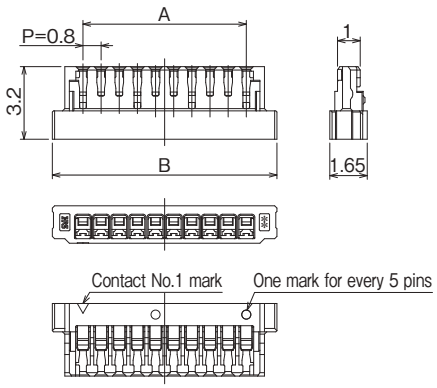

Unit : mm

Part No.	HRS No.	No. of Pos.	A	B	Purchase Unit
DF52-2P-0.8C	CL0668-0013-6-00	2	0.8	3.5	100pcs per bag
DF52-3P-0.8C	CL0668-0026-8-00	3	1.6	4.3	
DF52-4P-0.8C	CL0668-0014-9-00	4	2.4	5.1	
DF52-5P-0.8C	CL0668-0027-0-00	5	3.2	5.9	
DF52-6P-0.8C	CL0668-0015-1-00	6	4.0	6.7	
DF52-8P-0.8C	CL0668-0016-4-00	8	5.6	8.3	
DF52-10P-0.8C	CL0668-0017-7-00	10	7.2	9.9	
DF52-12P-0.8C	CL0668-0018-0-00	12	8.8	11.5	
DF52-14P-0.8C	CL0668-0028-3-00	14	10.4	13.1	
DF52-15P-0.8C	CL0668-0019-2-00	15	11.2	13.9	
DF52-16P-0.8C	CL0668-0029-6-00	16	12.0	14.7	
DF52-17P-0.8C	CL0668-0002-0-00	17	12.8	15.5	
DF52-20P-0.8C	CL0668-0020-1-00	20	15.2	17.9	

Nov.1.2026 Copyright 2026 HIROSE ELECTRIC CO., LTD. All Rights Reserved.

Downloaded from Arrow.com.

Crimp Contact

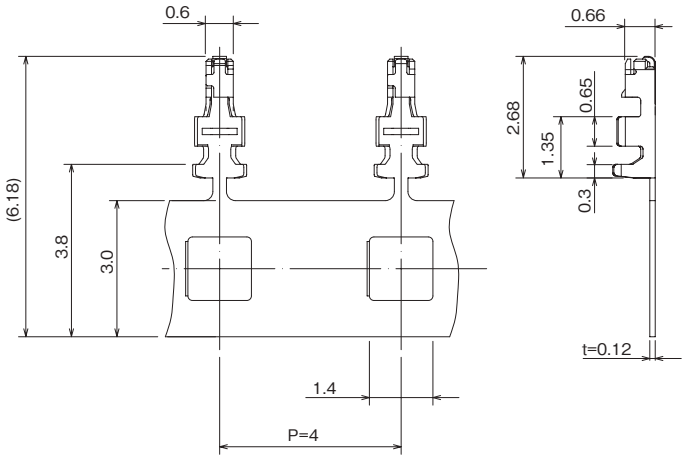

Part No.	HRS No.	Type	Purchase Unit
DF52-2832PCF	CL0668-0030-5-00	Reel Contact	40,000pcs per reel

● Applicable Wire (Tinned Annealed Copper Wire)

Conductor Size (Core Wire Configuration)	Jacket Outer Diameter	Recommended Wire	Strip Length
28 AWG (7pcs/0.127mm in diameter)	ϕ 0.5 to 0.6mm	UL1571 (thin line)	0.9 to 1.3mm
30 AWG (7pcs/0.102mm in diameter)			
32 AWG (7pcs/0.08mm in diameter)			

Note 1 : For applicable cable other than those listed above, refer to Crimp Condition Table. Crimp Condition Table is available from Part No. link.
(If you are using a cable that is not listed in Crimp Condition Table, please contact a Hirose sales representative.)
Note 2 : The strip length is a reference value. Please adjust the strip length accordingly for specifications and requirements.
Refer to the Crimp Quality Standard for details.

Applicable Crimping Tools

Type	Part No.	HRS No.	Applicable Contact	Remarks
Applicator	AP105-DF52-2832P	CL0901-4636-7-00	DF52-2832PCF	
	DHS877900H-UP	-	DF52-2832PCF	(Note 2) Manufactured by Japan Automatic Machine Co.,Ltd.
Press Body	CM-105C	CL0901-0001-0-00	-	
Extraction Tool	DF-C-PO(B)	CL0550-0179-2-00	DF52-2832PCF	

Note 1 : Issues caused by using tools other than those specified by Hirose are not covered by warranty.
Note 2 : Applicator manufactured by JAPAN AUTOMATIC MACHINE (J.A.M.). Please visit the J.A.M homepage, if you have inquiries about the applicator or crimp defects. (URL : http://www.jam-net.co.jp)
Note 3 : Please conduct crimping work according to the Crimp Quality Standard and Crimp Condition.
Note 4 : When non-authorized tools are used, please consult with a Hirose sales representative regarding requests for the hand tool die drawing.

Nov.1.2026 Copyright 2026 HIROSE ELECTRIC CO., LTD. All Rights Reserved.

Downloaded from Arrow.com.

Precautions

Recommended Temperature Profile (Compatible With Lead-free Soldering)	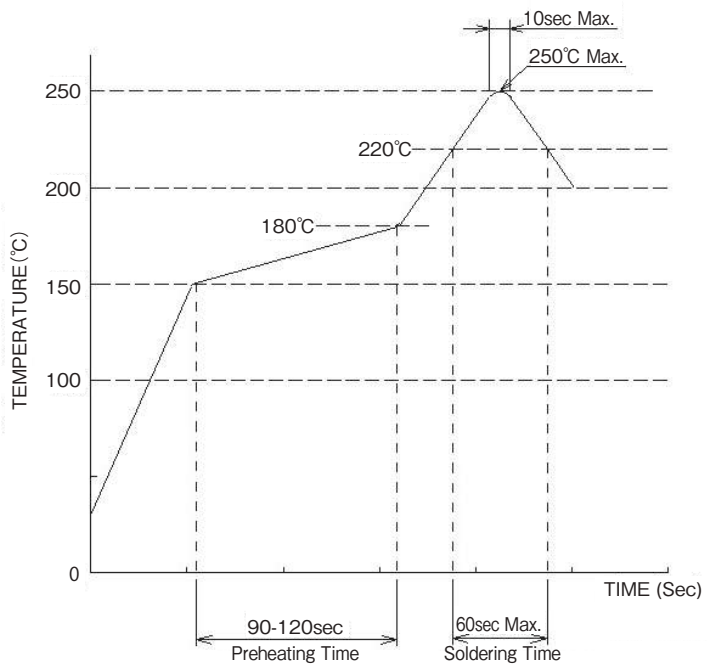 [Applicable Conditions] 1. Peak temperature: 250℃ Max. 2. Heating area : 220℃ Min. for less than 60 seconds 3. Preheating area : 150℃ to 180℃ for 90 to 120 seconds 4. Number of Reflow Cycles: 2 cycles Max. *Measurement is conducted at the contact lead part. Soldering results may change depending on conditions such as solder paste type, manufacturer, PCB size, and other soldering materials. Please determine all mounting conditions before use. Note: This temperature profile is a recommended value.
Recommended Manual Soldering Conditions	Soldering Iron Temperature: 350 ± 10℃ , soldering time: within 3 seconds
Recommended Screen Thickness and Aperture Ratio (Pattern surface ratio)	Thickness: 0.1mm, aperture opening ratio: 100%
Board Warpage	A maximum of 0.02mm at the center of connector, as measured from either end of the connector.
Cleaning Conditions	Cleaning is not recommended. If you clean this product, please evaluate its performance before using it. (Cleaning may impair the mating/unmating properties and lower resistance to environmental factors.)
Notes	■ Please note that any mating operation of the connector when not mounted on the board may cause damage or deformation of the contacts. ■ Do not apply excessive amounts of flux during hand soldering as it may cause excess solder and flu wicking. ■ This housing color may have slight variations depending on the production lot. This color variation does not affect performance. ■ Please refer to "DF52 Mating/Unmating Operation Instruction Manual" for points in handling regarding mating operations.
Precautions	Please refer to the materials listed below on our company website when handling this product. ■ Product Guidelines (Board-to-Wire Connector Guidelines) ■ Product Guidelines (Mating/Unmating Operation Instruction Manual) ■ Cable Assembly Instruction ■ Crimp Quality Standard

Nov.1.2026 Copyright 2026 HIROSE ELECTRIC CO., LTD. All Rights Reserved.

Downloaded from Arrow.com.

Nov.1.2026 Copyright 2026 HIROSE ELECTRIC CO., LTD. All Rights Reserved.

While Taking into Consideration

Specifications mentioned in this catalog are reference values.
When considering to order or use this product, please review the Drawing and Product Specifications sheets.
Use an appropriate cable when using the connector in combination with cables.
If considering usage of a non-specified cable, please contact your sales representative.
If assembly process is done by jigs & tools which are not identified by Hirose, the warranty of the product may be affected.
If considering usage for below mentioned applications, please contact your sales representative.
In cases where the application will demand a high level of reliability, such as automotive, medical instruments, public infrastructure, aerospace/defense etc. Hirose must review before assurance of reliability can be given.

HIROSE ELECTRIC CO.,LTD. 2-6-3,Nakagawa Chuoh,Tsuzuki-Ku,Yokohama-Shi 224-8540,JAPAN
https://www.hirose.com

※The contents of this catalog are current as of date of 4/2025. Contents are subject to change without notice for the purpose of improvements.
※The HRS logo and "HIROSE" are trademarks of HIROSE ELECTRIC CO., LTD.

Downloaded from Arrow.com.