© 2024 TE Connectivity. All Rights Reserved.

REVISIONS					
P	LTR	DESCRIPTION	DATE	DWN	APVD
	A3	2296059-5 VARIANT MADE ACTIVE	14DEC2020	TD	DWE
	A4	DRAWING UPDATE	13DEC2022	PK	DWE
	B	5-2296059-4 VARIANT IS OBSOLETED	10JAN2024	VR	NJ
	B1	5-2296059-4 VARIANT IS REACTIVATED	23OCT2024	GV	JN

2296059-2
AS SHOWN
A-A
1:1

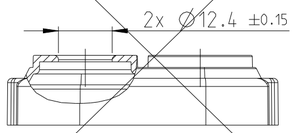

2296059-3
AS SHOWN
A-A
1:1

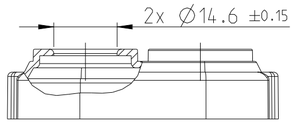

2296059-4
AS SHOWN
A-A
1:1

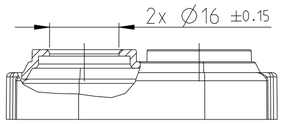

2296059-5
AS SHOWN
A-A
1:1

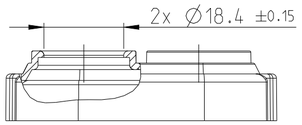

5-2296059-4 B1
AS SHOWN
A-A
1:1

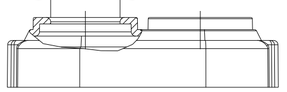

NOTES

1. TE PART NUMBER
2. PRODUCTION DATE WITH DATE INSERT MONTH/YEAR
3. CAVITY MARKING
4. PART REVISION
5. TE-TRADEMARK
6. MATERIALMARKING
7. BULK PACKAGING IN PLASTIC BAG AND CORRUGATED SHIPPING BOX

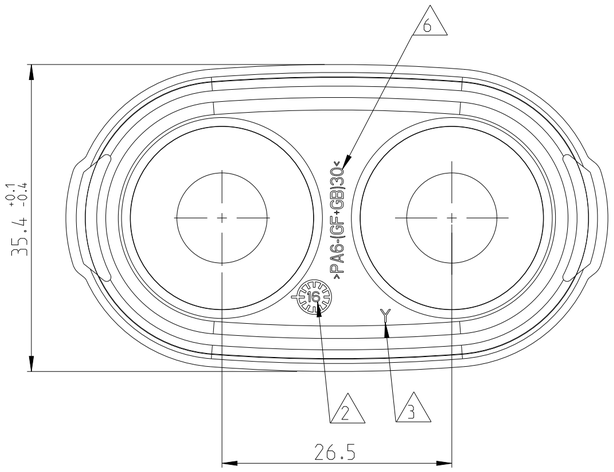

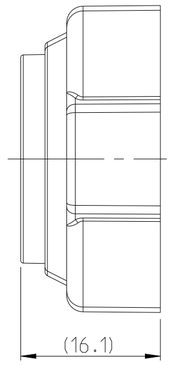

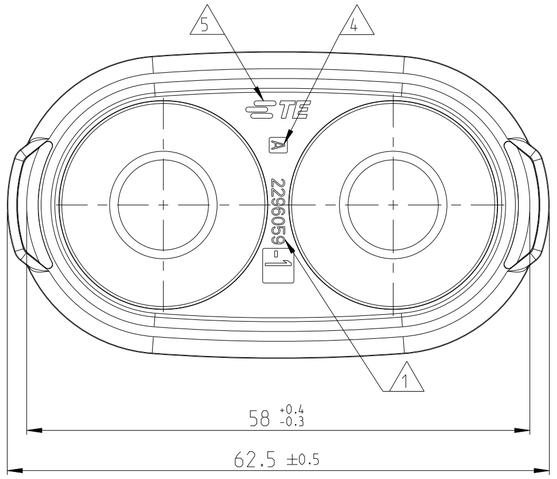

2296059-1
AS SHOWN
1:1

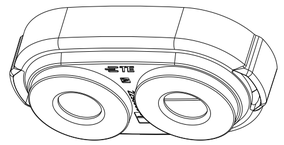

TE-PART-NO.	REV.	DESCRIPTION	MATERIAL	FOR CABLE DIAM. [mm]	FOR CABLE CROSS SECTION [mm²]	WEIGHT [g]	COLOUR
B1 5-2296059-4	A	COVER, CABLE SEAL, COMBO DC	PA6 (GF+GB)30	15.2...15.8	50	6.47	BLACK
2296059-5	A	COVER, CABLE SEAL, COMBO DC	PA6 (GF+GB)30	17.4...18.2	70	6.20	
2296059-4	A	COVER, CABLE SEAL, COMBO DC	PA6 (GF+GB)30	15.2...15.8	50	6.47	ORANGE SIMILAR RAL 2003
2296059-3	A	COVER, CABLE SEAL, COMBO DC	PA6 (GF+GB)30	13.8...14.4	35	6.61	
~~2296059-2~~	~~A~~	~~COVER, CABLE SEAL, COMBO DC~~	~~PA6 (GF+GB)30~~	11.6...12.2	25	6.80	
2296059-1	A	COVER, CABLE SEAL, COMBO DC	PA6 (GF+GB)30	9.6...10.2	16	6.95	

THIS DRAWING IS A CONTROLLED DOCUMENT.
DIMENSIONING AND TOLERANCING PER GPS (ISO STANDARDS).

DIMENSIONS: mm

TOLERANCES UNLESS OTHERWISE SPECIFIED: DIN 16742 TG5
0 PLC ±
1 PLC ±
2 PLC ±
3 PLC ±
4 PLC ±
ANGLES ±

MATERIAL: SEE TABLE
FINISH: -

DWN Vishwa A 30JUN2016
CHK F. Wittrock 30JUN2016
APVD F. Wittrock 30JUN2016
PRODUCT SPEC -
APPLICATION SPEC -
WEIGHT -

TE Connectivity

NAME: COVER, CABLE SEAL, COMBO DC

SIZE	CAGE CODE	DRAWING NO	RESTRICTED TO
A2	-	C-2296059	-

CUSTOMER DRAWING | SCALE 5:1 | SHEET 1 OF 1 | REV B1

Downloaded from Arrow.com.