572 SERIES

WATERPROOF WIRE TO WIRE & WIRE TO BOARD CONNECTORS

Features:

- **5.8mm pitch, rated current: 10A max**
- **Fully waterproof with double latch solution**
- **Available in wire to wire and wire to board options**
- **Available in 1, 2, or 3 positions**
- **True crimp and poke solution**
- **Internal polarization to prevent mismating**
- **Available with wire already installed**
- **Wide range of wire sizes available**
- **Waterproof Grade: IP67 Certified**

RoHS COMPLIANT

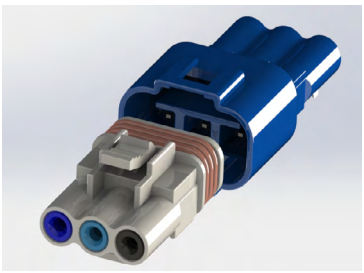

Specifications:

No. of Positions	1, 2, 3
Pitch	5.8 mm
Rated Voltage	300 V
Rated Current	10 amps maximum
Dielectric Withstanding Voltage	1700 V AC (rms)
Contact Resistance	10 milliohms maximum
Insulation Resistance	1000 megaohms minimum/DC 500 V
Operating Temperature	-40°C to +105°C
PCB Thickness	1.6 mm

Ordering Code:

572-002-000-100

SERIES:
572, WIRE TO WIRE
WIRE TO BOARD

NO. OF CONTACTS:
001 - 1 CONTACT
002 - 2 CONTACTS
003 - 3 CONTACTS

CONTACT CODE:
000 - NO CONTACTS (ONLY FOR CRIMP CONTACTS)
420 - BOARD MOUNT CONTACTS

STYLE:
101 - WHITE MALE HOUSING (ONLY FOR BOARD MOUNT CONTACTS)
301 - BLUE MALE HOUSING (ONLY FOR BOARD MOUNT CONTACTS)
100 - WHITE MALE HOUSING FOR CRIMP CONTACTS
300 - BLUE MALE HOUSING FOR CRIMP CONTACTS
200 - WHITE FEMALE HOUSING FOR CRIMP CONTACTS
400 - BLUE FEMALE HOUSING FOR CRIMP CONTACTS

Crimp Contact:

Male Contact (Pin)			
Part No (Material)	AWG#	Ins. Dia.	Pcs/Reel
570-290-751 (Brass)	14	Max. Ø3.1	4,000
570-291-731 (Ph. Brz.)	20-16	Max. Ø3.1	4,000
570-290-731 (Brass)	20-16	Max. Ø3.1	4,000
570-290-711 (Brass)	22-20	Max. Ø2.7	4,000

Female Contact (Socket)			
Part No (Material)	AWG#	Ins. Dia.	Pcs/Reel
570-290-761 (Brass)	14	Max. Ø3.1	4,000
570-291-741 (Ph. Brz.)	20-16	Max. Ø3.1	4,000
570-290-741 (Brass)	20-16	Max. Ø3.1	4,000
570-291-721 (Ph. Brz.)	22-20	Max. Ø2.7	4,000
570-290-721 (Brass)	22-20	Max. Ø2.7	4,000

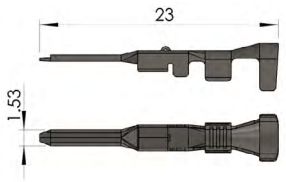

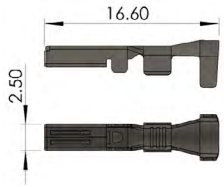

Materials:

Crimp & Poke	Housing	PBT, UL 94V-0
	Contact	Ph. Brz. or Brass
PCB Header	Housing	PBT with Glass, UL 94V-0
	Contact	Brass
Contact Plating		Tin Plating
Wire & Housing Seals		Silicone Rubber

Assembly Layout:

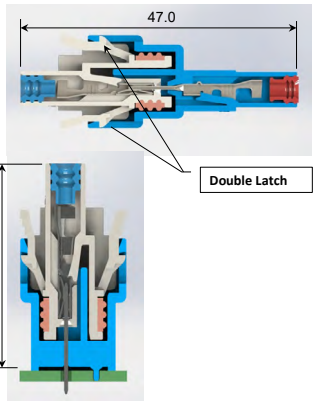

Wire Seal:

Part No.	Wire O.D.	Color	AWG#	Ø Dia.	Height
570-260-001	Ø1.7~Ø2.1	Black	22	Ø 5.0	6.0
570-260-002	Ø2.1~Ø2.7	Light Blue	22-20	Ø 5.0	6.0
570-260-003	Ø2.1~Ø2.7	Blue	22-20	Ø 5.0	6.7
570-260-004	Ø2.7~Ø3.1	Brown	20-14	Ø 4.9	5.0



Downloaded from Arrow.com.

572 SERIES

WIRE TO WIRE / WIRE TO BOARD 5.8MM PITCH

Male Housing:

572-001-000-XXX

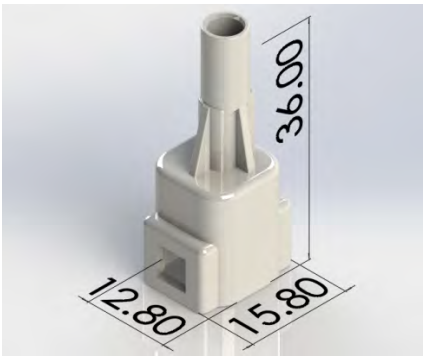

572-002-000-XXX

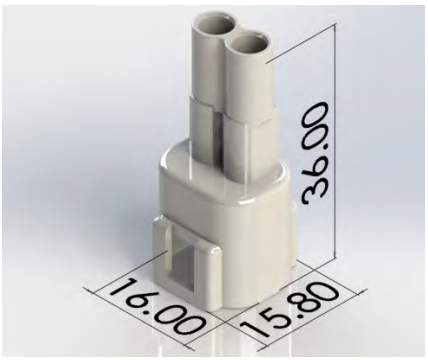

572-003-000-XXX



Female Housing:

572-001-000-XXX

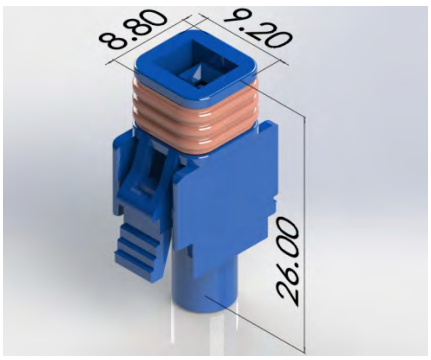

572-002-000-XXX

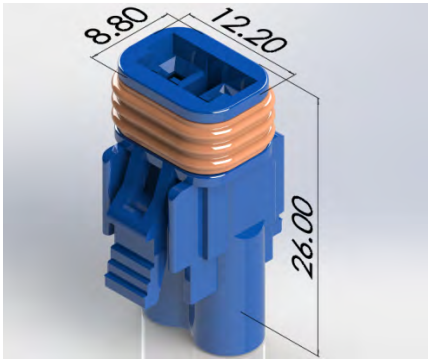

572-003-000-XXX

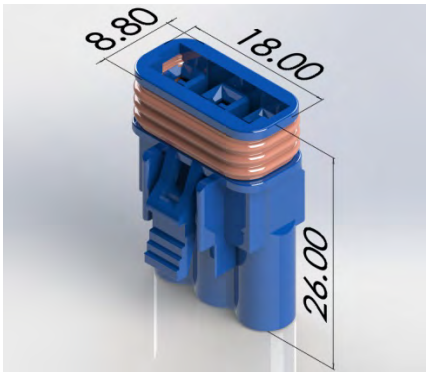

PCB Header

572-001-420-XXX

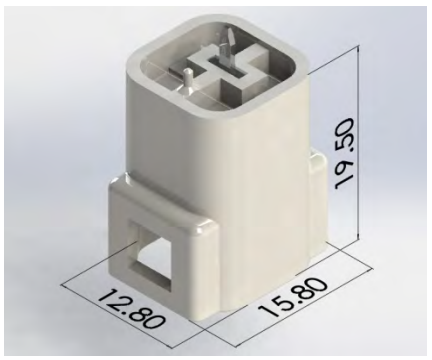

572-002-420-XXX

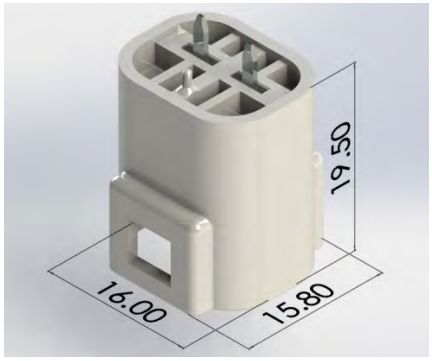

572-003-420-XXX

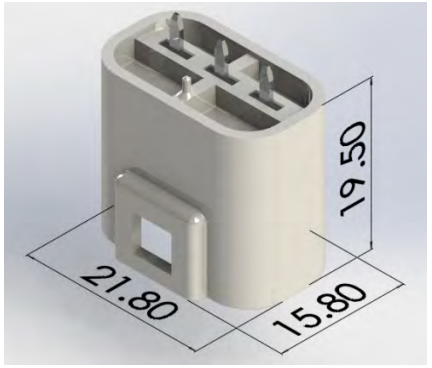

Male Housing:

Housing Color:	XXX:
White	100
Blue	300

Female Housing:

Housing Color:	YYY:
White	200
Blue	400

PCB Header:

Housing Color:	XXX:
White	101
Blue	301

Downloaded from Arrow.com.

Recommended PCB Layout

572 SERIES - 1P

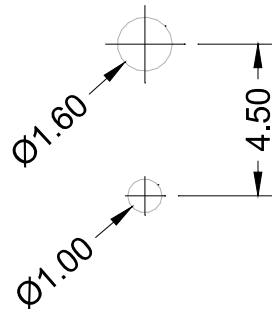

572 SERIES - 2P

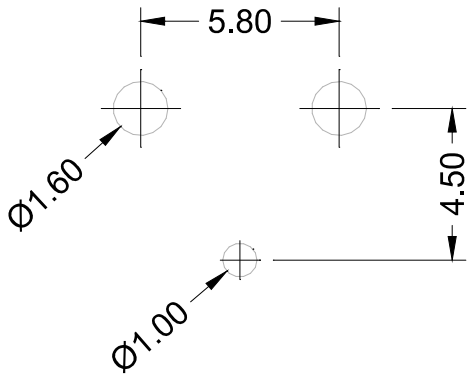

572 SERIES - 3P

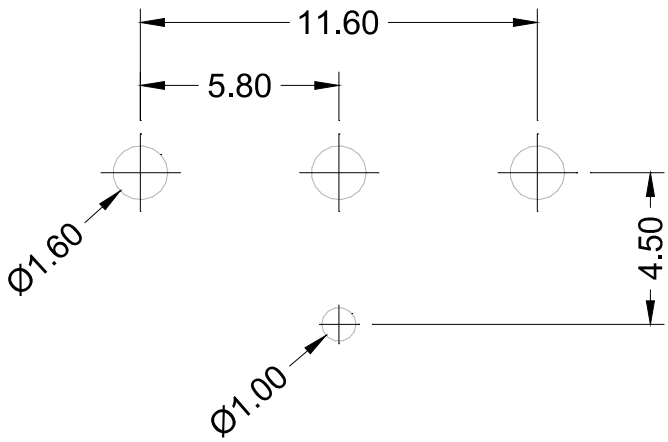

Downloaded from Arrow.com.