IRFM450 (JANTX2N7228)

PD-90493J

Power MOSFET
Thru-Hole (TO-254AA)
500V, 12A, N-channel, HEXFET™ MOSFET Technology

Features

- Simple drive requirements
- Hermetically sealed
- Electrically isolated
- Dynamic dv/dt rating
- Light weight
- Ceramic eyelets
- ESD rating: class 3A per MIL-STD-750, Method 1020

Potential Applications

- DC-DC converter
- Motor drives

Product Summary

- **BV_{DSS}:** 500V
- **I_D:** 12A
- **$R_{DS(on),max}$:** 415mΩ
- **$Q_{G,max}$:** 120nC
- **REF:** MIL-PRF-19500/592

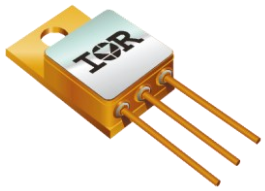

TO-254AA

Product Validation

Qualified to JANTXV screening flow according to MIL-PRF-19500 for high-reliability applications

Description

IR HiRel HEXFET™ technology is advanced line of power MOSFET transistors. The efficient geometry design achieves very low on-state resistance combined with high transconductance. HEXFET™ transistors also feature all of the well-established advantages of MOSFETs, such as voltage control, fast switching and electrical parameter temperature stability. They are well-suited for applications such as switching power supplies, motor controls, inverters, high energy pulse circuits, and virtually any application where high reliability is required. The HEXFET™ transistor's totally isolated package eliminates the need for additional isolating material between the device and the heatsink. This improves thermal efficiency and reduces drain capacitance.

Ordering Information

Table 1 Ordering options

Part number	Package	Screening Level
IRFM450	TO-254AA	COTS
JANTX2N7228	TO-254AA	JANTX
JANTXV2N7228	TO-254AA	JANTXV

Downloaded from Arrow.com.

Table of contents

Features **1**
Potential Applications **1**
Product Validation **1**
Description **1**
Ordering Information **1**
Table of contents **2**
1 Absolute Maximum Ratings **3**
2 Device Characteristics **4**
2.1 Electrical Characteristics 4
2.2 Source-Drain Diode Ratings and Characteristics 5
2.3 Thermal Characteristics 5
3 Electrical Characteristics Curves **6**
4 Test Circuits **9**
5 Package Outline **10**
Revision history **11**

Downloaded from Arrow.com.

1 Absolute Maximum Ratings

Table 2 Absolute Maximum Ratings

Symbol	Parameter	Value	Unit
I_{D1} @ V_{GS} = 10V, T_C = 25°C	Continuous Drain Current	12	A
I_{D2} @ V_{GS} = 10V, T_C = 100°C	Continuous Drain Current	8.0	A
I_{DM} @ T_C = 25°C	Pulsed Drain Current [1]	48	A
P_D @ T_C = 25°C	Maximum Power Dissipation	150	W
	Linear Derating Factor	1.2	W/°C
V_{GS}	Gate-to-Source Voltage	± 20	V
E_{AS}	Single Pulse Avalanche Energy [2]	750	mJ
I_{AR}	Avalanche Current [1]	12	A
E_{AR}	Repetitive Avalanche Energy [1]	15	mJ
dv/dt	Peak Diode Reverse Recovery [3]	3.5	V/ns
T_J T_{STG}	Operating Junction and Storage Temperature Range	-55 to +150	°C
	Lead Temperature	300 (0.063 in. /1.6 mm from case for 10s)	
	Weight	9.3 (Typical)	g

[1] Repetitive Rating; Pulse width limited by maximum junction temperature.

[2] V_{DD} = 50V, starting T_J = 25°C, L = 10.4mH, Peak I_L = 12A, V_{GS} = 10V

[3] $I_{SD} \leq$ 12A, di/dt $\leq$ 130A/µs, $V_{DD} \leq$ 500V, $T_J \leq$ 150°C

Downloaded from Arrow.com.

2 Device Characteristics

2.1 Electrical Characteristics

Table 3 Electrical Characteristics @ T_j = 25°C (Unless Otherwise Specified)

Symbol	Parameter	Min.	Typ.	Max.	Unit	Test Conditions
BV_{DSS}	Drain-to-Source Breakdown Voltage	500	—	—	V	V_{GS} = 0V, I_D = 1.0mA
$\Delta BV_{DSS}/\Delta T_J$	Breakdown Voltage Temp. Coefficient	—	0.68	—	V/°C	Reference to 25°C, I_D = 1.0mA
$R_{DS(on)}$	Static Drain-to-Source On-State Resistance	—	—	415	mΩ	V_{GS} = 10V, I_{D2} = 8.0A [1]
		—	—	515		V_{GS} = 10V, I_{D1} = 12A [1]
$V_{GS(th)}$	Gate Threshold Voltage	2.0	—	4.0	V	V_{DS} = V_{GS}, I_D = 250µA
Gfs	Forward Transconductance	6.5	—	—	S	V_{DS} = 15V, I_{D2} = 8.0A
I_{DSS}	Zero Gate Voltage Drain Current	—	—	25	µA	V_{DS} = 400V, V_{GS} = 0V
		—	—	250		V_{DS} = 400V, V_{GS} = 0V,T_J = 125°C
I_{GSS}	Gate-to-Source Leakage Forward	—	—	100	nA	V_{GS} = 20V
	Gate-to-Source Leakage Reverse	—	—	-100		V_{GS} = -20V
Q_G	Total Gate Charge	—	—	120	nC	I_{D1} = 12A V_{DS} = 250V V_{GS} = 10V
Q_{GS}	Gate-to-Source Charge	—	—	19		
Q_{GD}	Gate-to-Drain ('Miller') Charge	—	—	70		
$t_{d(on)}$	Turn-On Delay Time	—	—	35	ns	I_{D1} = 12A ** V_{DD} = 250V R_G = 2.35Ω V_{GS} = 10V
t_r	Rise Time	—	—	190		
$t_{d(off)}$	Turn-Off Delay Time	—	—	170		
t_f	Fall Time	—	—	130		
$L_s + L_D$	Total Inductance	—	6.8	—	nH	Measured from Drain lead (6mm / 0.25 in from package) to Source lead (6mm/ 0.25 in from package) with Source wire internally bonded from Source pin to Drain pad
C_{iss}	Input Capacitance	—	2700	—	pF	V_{GS} = 0V V_{DS} = 25V f = 1.0MHz
C_{oss}	Output Capacitance	—	600	—		
C_{rss}	Reverse Transfer Capacitance	—	240	—		

** Switching speed maximum limits are based on manufacturing test equipment and capability.

[1] Pulse width ≤ 300 µs; Duty Cycle ≤ 2%

Downloaded from Arrow.com.

2.2 Source-Drain Diode Ratings and Characteristics

Table 4 Source-Drain Diode Characteristics

Symbol	Parameter	Min.	Typ.	Max.	Unit	Test Conditions
I_S	Continuous Source Current (Body Diode)	—	—	12	A	
I_{SM}	Pulsed Source Current (Body Diode) [1]	—	—	48	A	
V_{SD}	Diode Forward Voltage	—	—	1.7	V	T_J = 25°C, I_S = 12A, V_{GS} = 0V [2]
t_{rr}	Reverse Recovery Time	—	—	1600	ns	T_J = 25°C, I_F = 12A, V_{DD} ≤ 50V di/dt = 100A/µs
Q_{rr}	Reverse Recovery Charge	—	9.3	—	µC	
t_{on}	Forward Turn-On Time	Intrinsic turn-on time is negligible (turn-on is dominated by L_S+L_D)				

2.3 Thermal Characteristics

Table 5 Thermal Resistance

Symbol	Parameter	Min.	Typ.	Max.	Unit
$R_{\theta JC}$	Junction-to-Case	—	—	0.83	°C/W
$R_{\theta CS}$	Case-to-Sink	—	0.21	—	
$R_{\theta JA}$	Junction-to-Ambient (Typical socket mount)	—	—	48	

[1] Repetitive Rating; Pulse width limited by maximum junction temperature.
[2] Pulse width ≤ 300 µs; Duty Cycle ≤ 2%

Downloaded from Arrow.com.

3 Electrical Characteristics Curves

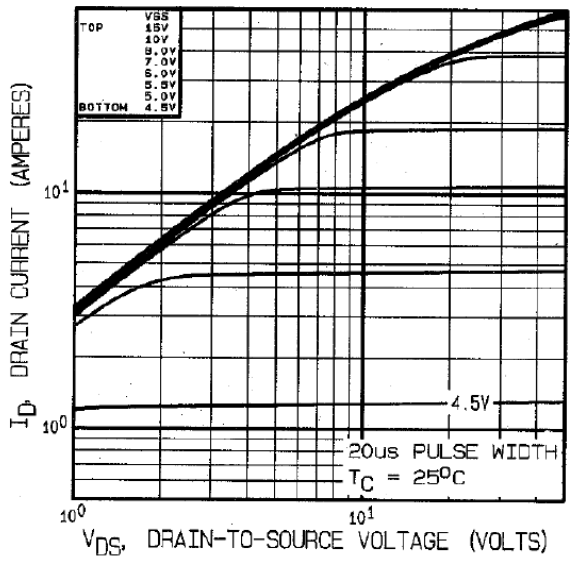

Figure 1 **Typical Output Characteristics**

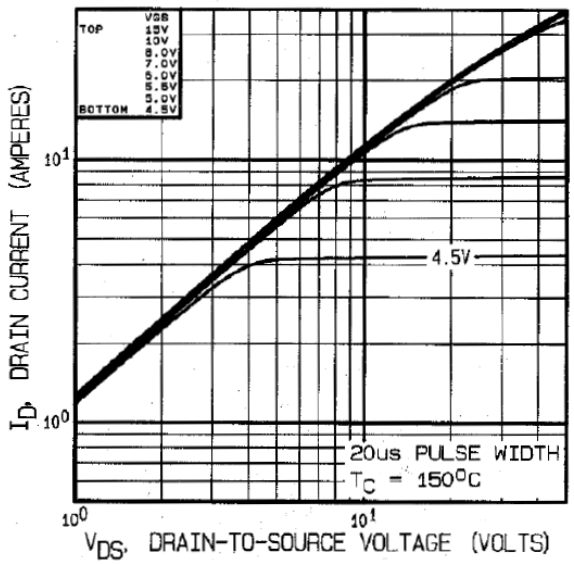

Figure 2 **Typical Output Characteristics**

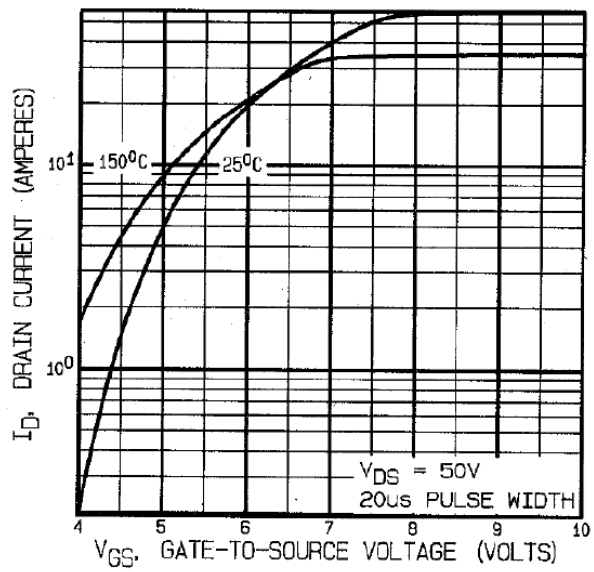

Figure 3 **Typical Transfer Characteristics**

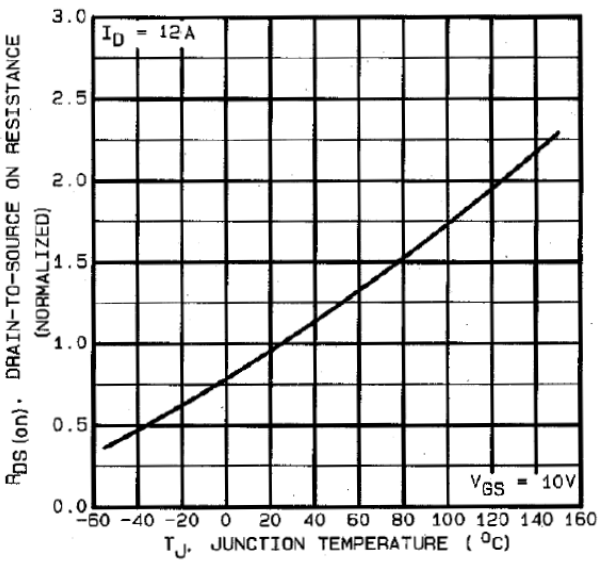

Figure 4 **Normalized On-Resistance Vs. Temperature**

Downloaded from Arrow.com.

Electrical Characteristics Curves

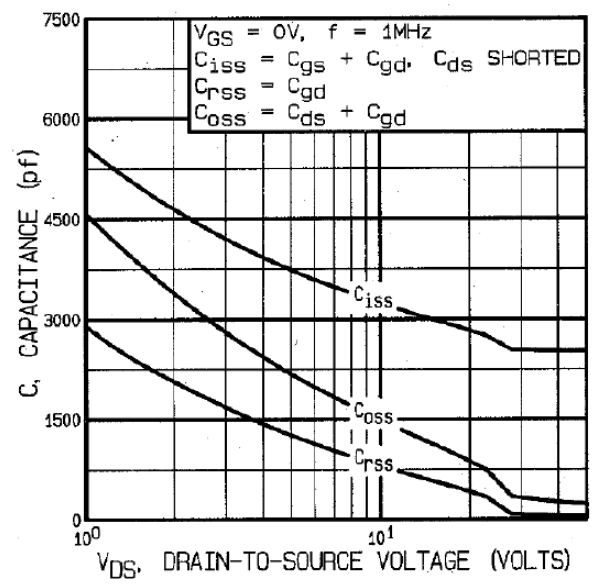

Figure 5 **Typical Capacitance Vs. Drain-to-Source Voltage**

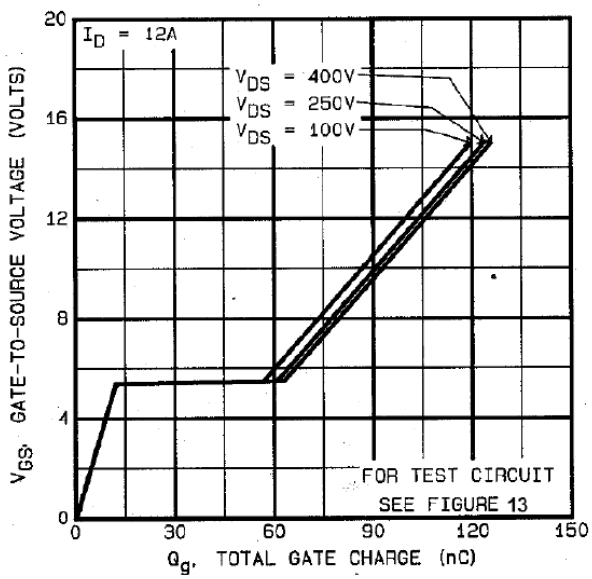

Figure 6 **Typical Gate Charge Vs. Gate-to-Source Voltage**

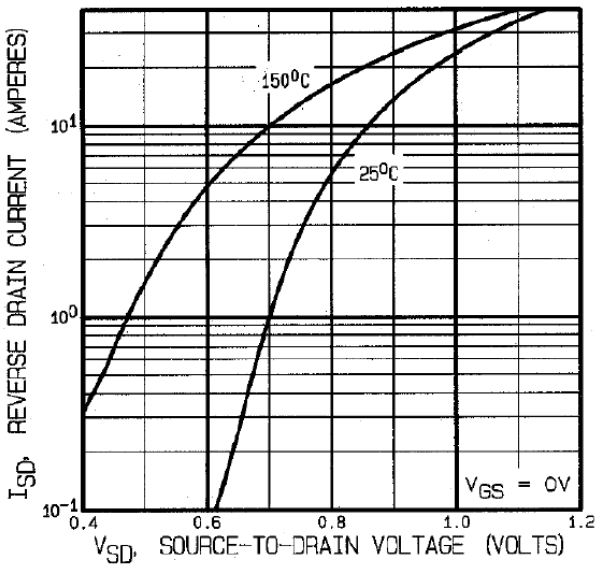

Figure 7 **Typical Source-Drain Current Vs. Diode Forward Voltage**

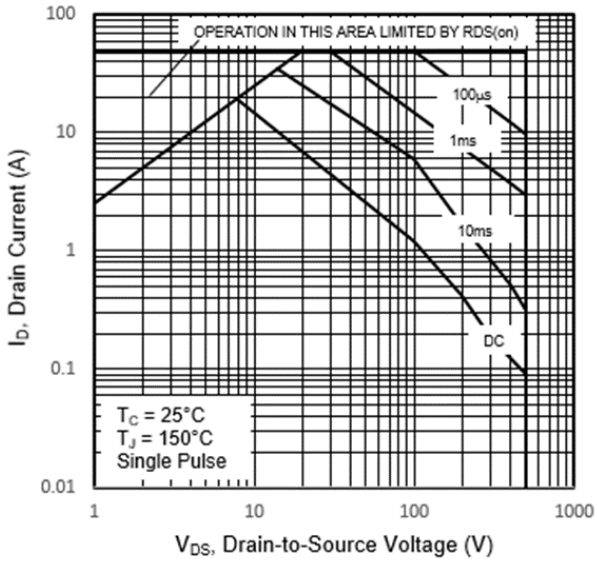

Figure 8 **Maximum Safe Operating Area**

Downloaded from Arrow.com.

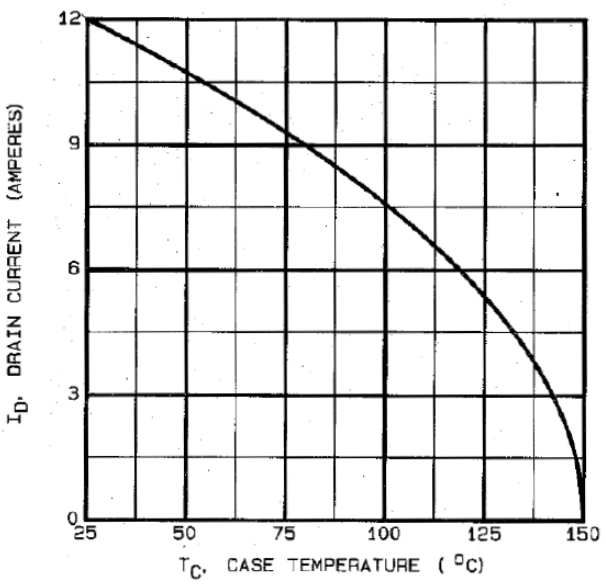

Figure 9 **Maximum Drain Current Vs. Case Temperature**

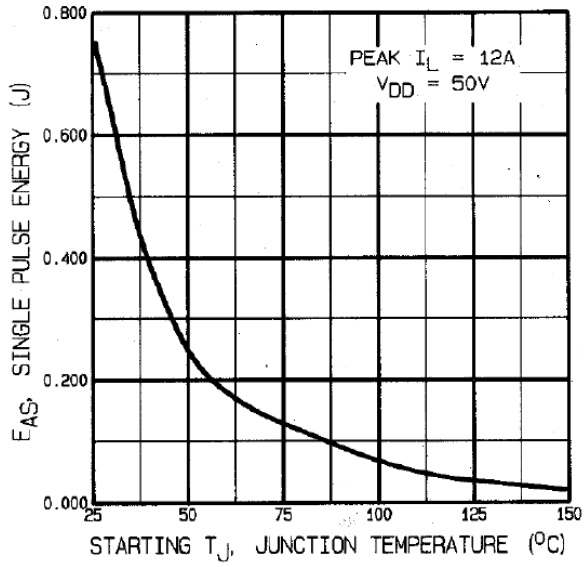

Figure 10 **Maximum Avalanche Energy Vs. Junction Temperature**

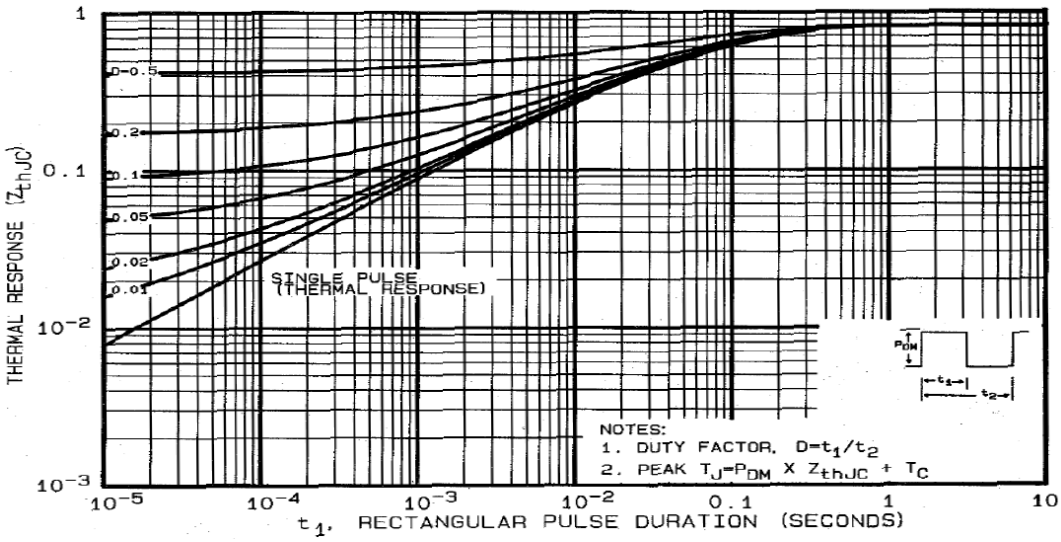

Figure 11 **Maximum Effective Transient Thermal Impedance, Junction-to-Case**

Downloaded from Arrow.com.

4 Test Circuits

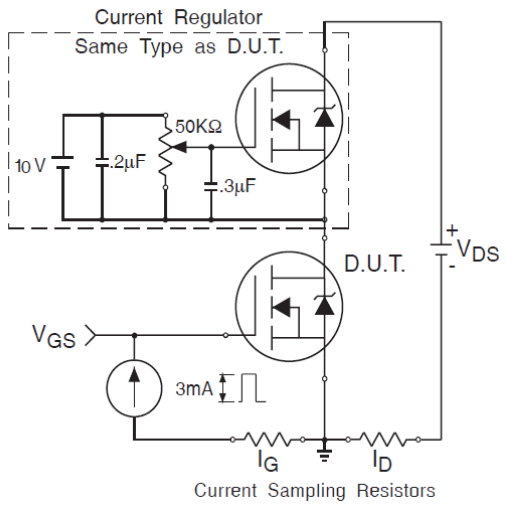

Figure 12 Gate Charge Test Circuit

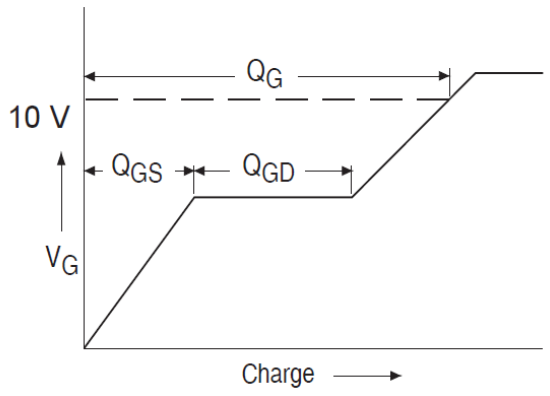

Figure 13 Gate Charge Waveform

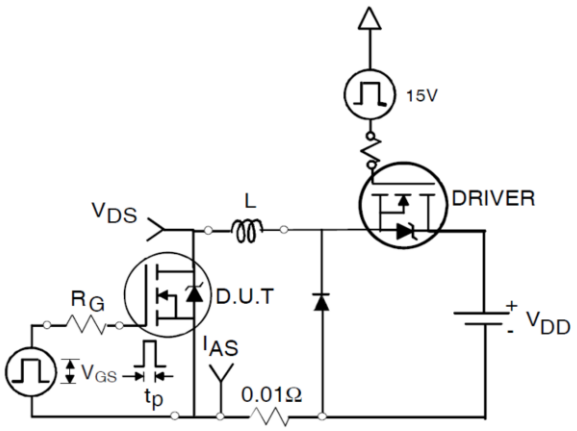

Figure 14 Unclamped Inductive Test Circuit

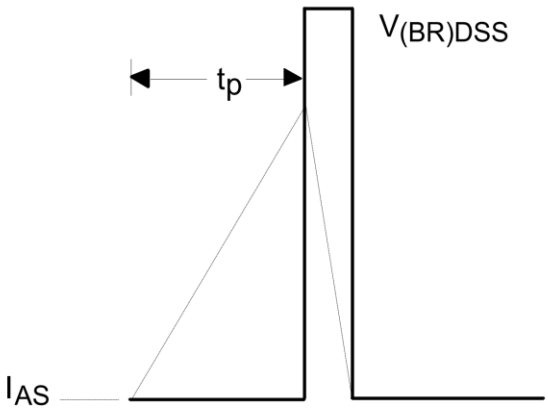

Figure 15 Unclamped Inductive Waveform

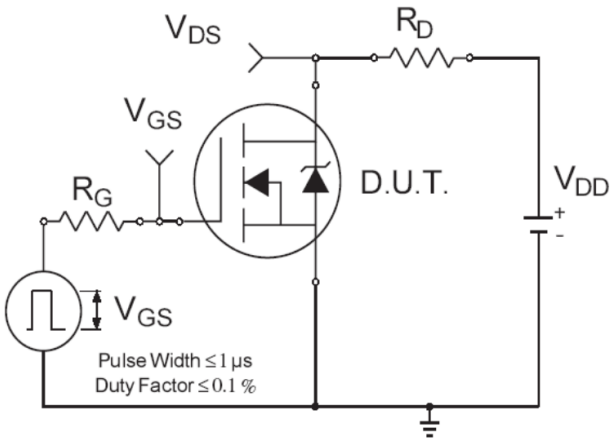

Figure 16 Switching Time Test Circuit

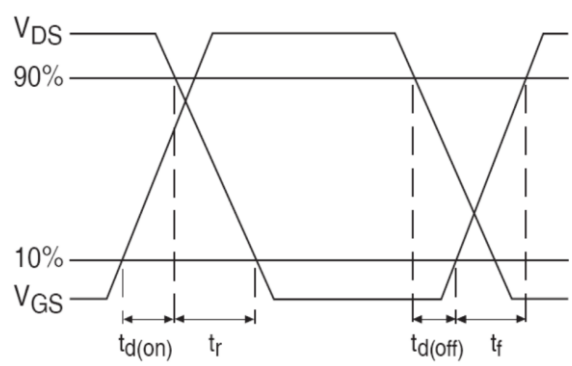

Figure 17 Switching Time Waveforms

Downloaded from Arrow.com.

5 Package Outline

Note: For the most updated package outline, please see the website: [TO-254AA]

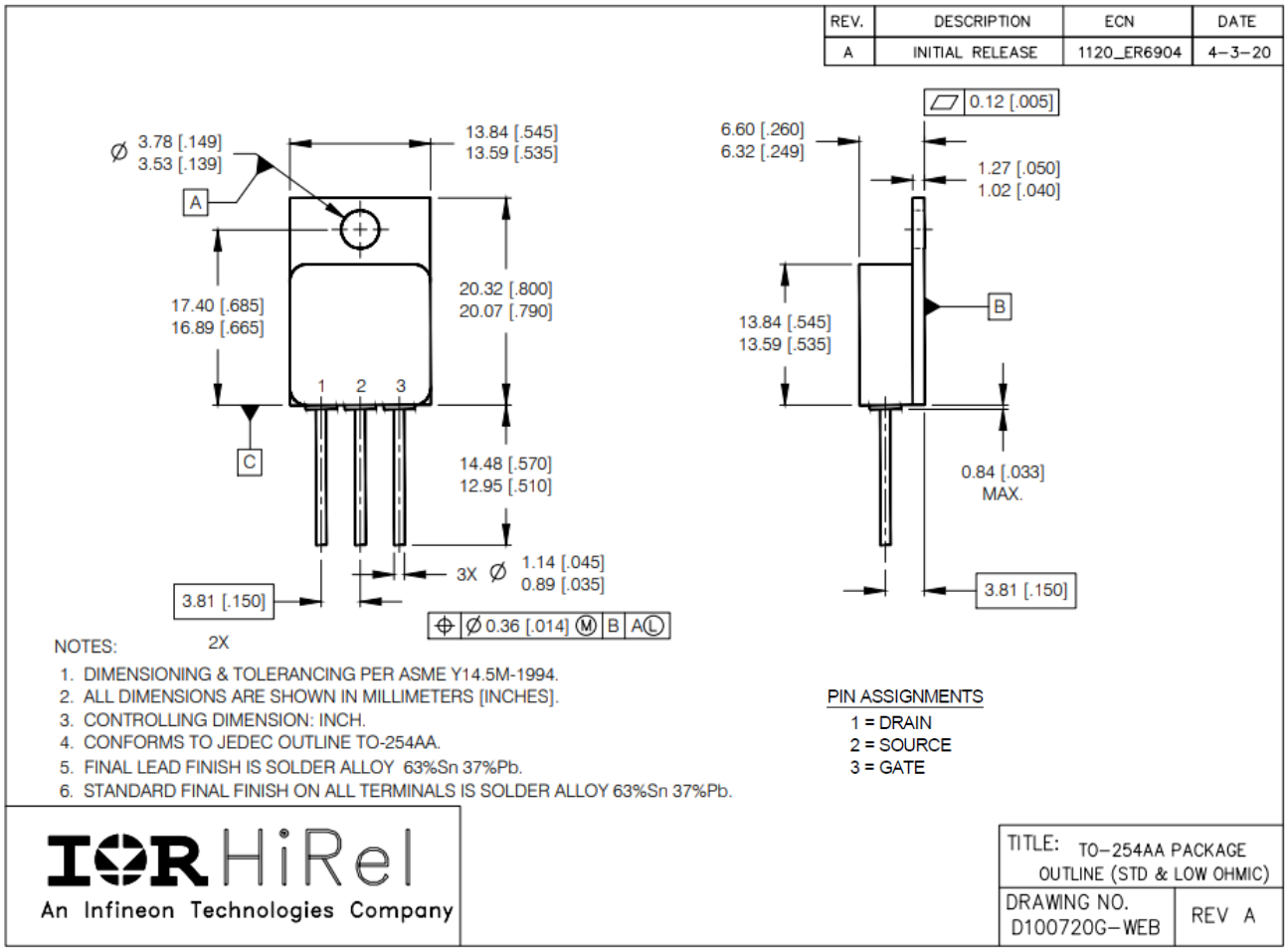

BERYLLIA WARNING PER MIL-PRF-19500

Package containing beryllia shall not be ground, sandblasted, machined, or have other operations performed on them which will produce beryllia or beryllium dust. Furthermore, beryllium oxide packages shall not be placed in acids that will produce fumes containing beryllium.

Downloaded from Arrow.com.

Revision history

Document version	Date of release	Description of changes
Rev F	02/05/2002	Datasheet (PD-90493)
Rev G	06/16/2016	Updated based on ECN-104401
Rev H	04/30/2021	Updated based on ECN-1120_08526
Rev J	08/06/2024	Updated based on ECN-1120_10008

Downloaded from Arrow.com.

Trademarks
All referenced product or service names and trademarks are the property of their respective owners.

Edition 2024-08-06

Published by

International Rectifier HiRel Products, Inc.

An Infineon Technologies company

El Segundo, California 90245 USA

© 2024 Infineon Technologies AG.
All Rights Reserved.

Do you have a question about this document?

Email: erratum@infineon.com

Document reference

IMPORTANT NOTICE

The information given in this document shall in no event be regarded as a guarantee of conditions or characteristics ("Beschaffenheitsgarantie").

With respect to any examples, hints or any typical values stated herein and/or any information regarding the application of the product, Infineon Technologies hereby disclaims any and all warranties and liabilities of any kind, including without limitation warranties of non-infringement of intellectual property rights of any third party.

In addition, any information given in this document is subject to customer's compliance with its obligations stated in this document and any applicable legal requirements, norms and standards concerning customer's products and any use of the product of Infineon Technologies in customer's applications.

The data contained in this document is exclusively intended for technically trained staff. It is the responsibility of customer's technical departments to evaluate the suitability of the product for the intended application and the completeness of the product information given in this document with respect to such application.

For further information on the product, technology, delivery terms and conditions and prices please contact your nearest Infineon Technologies office (**www.infineon.com**).

WARNINGS

Due to technical requirements components may contain dangerous substances. For information on the types in question please contact your nearest International Rectifier HiRel Products, Inc., an Infineon Technologies company, office.

International Rectifier HiRel Components may only be used in life-support devices or systems with the expressed written approval of International Rectifier HiRel Products, Inc., an Infineon Technologies company, if failure of such components can reasonably be expected to cause the failure of that life-support device or system, or to affect the safety and effectiveness of that device or system.

Life support devices or systems are intended to be implanted in the human body, or to support and/or maintain and sustain and/or protect human life. If they fail, it is reasonable to assume that the health of the user or other persons may be endangered.

Downloaded from Arrow.com.