CUI Devices is now Same Sky! Learn More

SERIES: SDF-J | DESCRIPTION: STANDARD DIN CONNECTOR

FEATURES

- PCB mount
- front shielded
- right angle

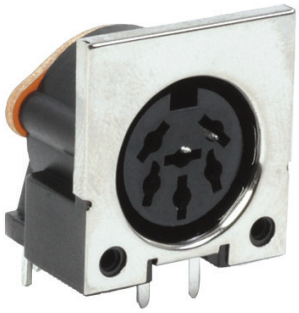

PART NUMBER KEY

SDF - XX J

Base Number

Pin Options
30 = 3 pins*
40 = 4 pins
50 = 5 pins, 180 degrees
60 = 6 pins
70 = 7 pins*
80 = 8 pins
130 = 13 pins

* Discontinued models SDF-30J & SDF-70J.

SPECIFICATIONS

parameter	conditions/description	min	typ	max	units
rated input voltage			100 24		Vac Vdc
rated input current	at 100 Vac at 24 Vdc			2 1	A A
contact resistance				20	mΩ
insulation resistance	at 500 Vdc	100			MΩ
voltage withstand	for 1 minute			500	Vac
insertion force				6.5	kg
withdrawal force		1		5.0	kg
operating temperature		-40		85	°C
life			1,000		cycles
flammability rating	UL94V-0				
RoHS	yes				

SOLDERABILITY

parameter	conditions/description	min	typ	max	units
wave soldering	for 10 seconds max			260	°C
hand soldering	for 5±1 seconds	240	245	250	°C

Downloaded from Arrow.com.

MECHANICAL DRAWING (SDF-30J)

units: mm
tolerance: ±0.3 mm

ITEM	DESCRIPTION	MATERIAL	PLATING/COLOR
1	body	PBT (UL94V-0)	black
2	shielded terminal	brass	nickel
3	plate	bakelite	
4	terminals	brass	tin

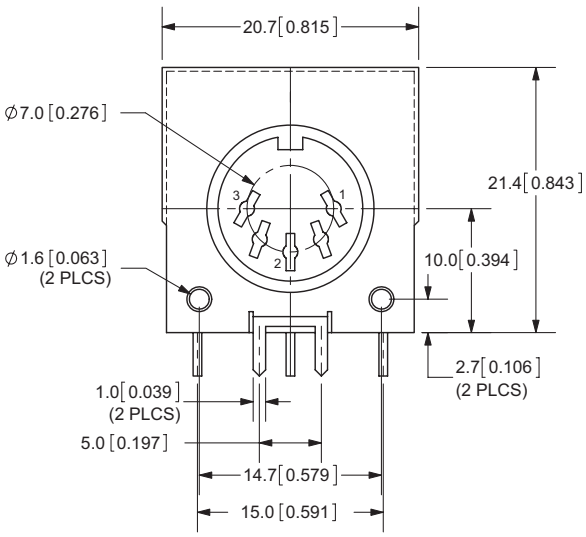

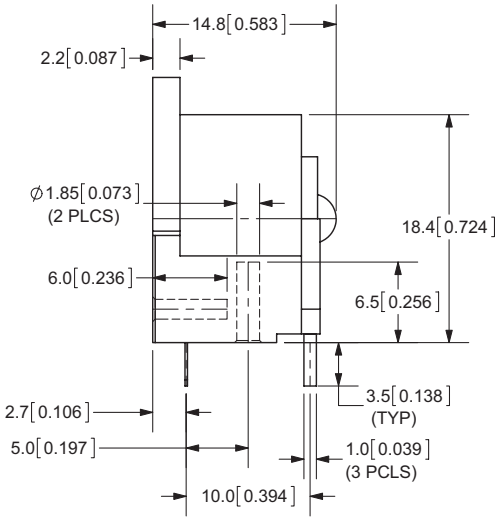

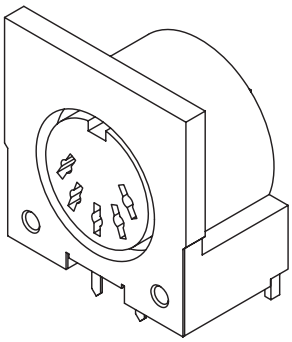

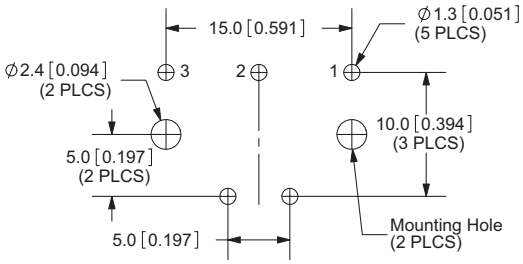

Recommended PCB Layout
Top View

Downloaded from Arrow.com.

MECHANICAL DRAWING (SDF-40J)

units: mm
tolerance: ±0.3 mm
unless otherwise noted

ITEM	DESCRIPTION	MATERIAL	PLATING/COLOR
1	body	PBT (UL94V-0)	black
2	shield terminal	brass	nickel
3	plate	bakelite	
4	contact	brass	tin

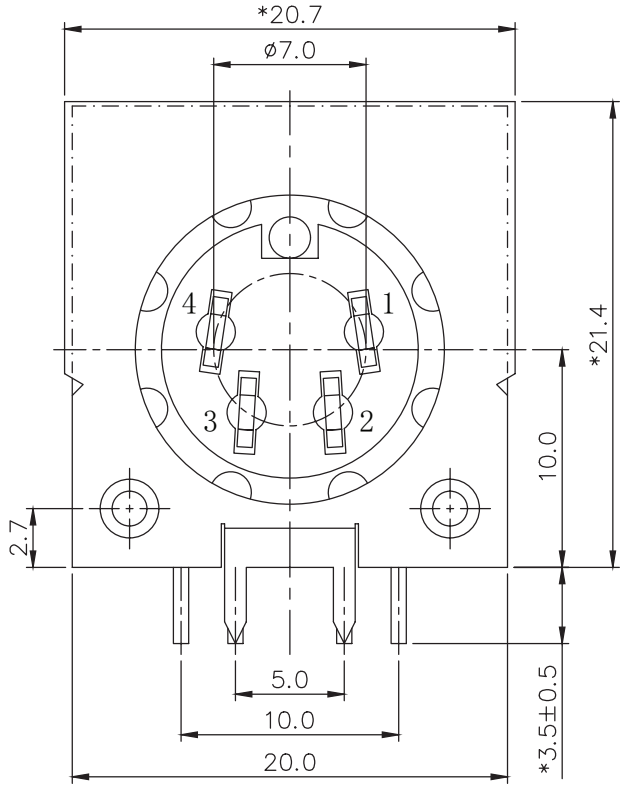

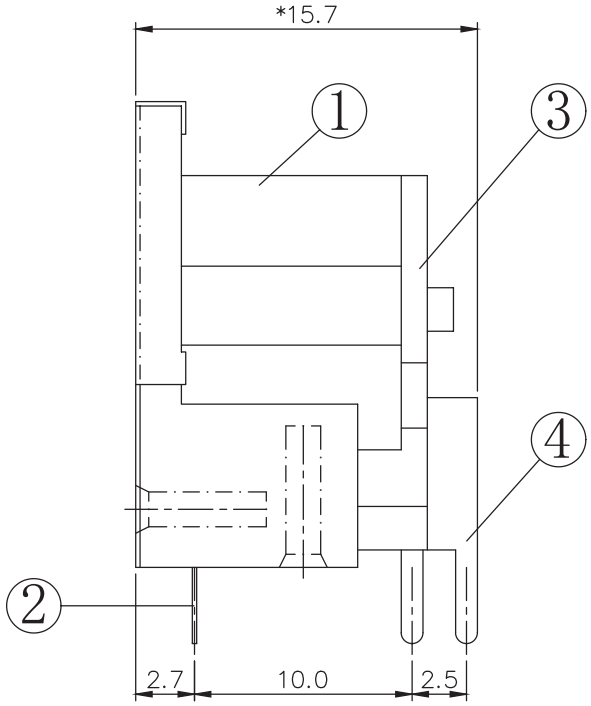

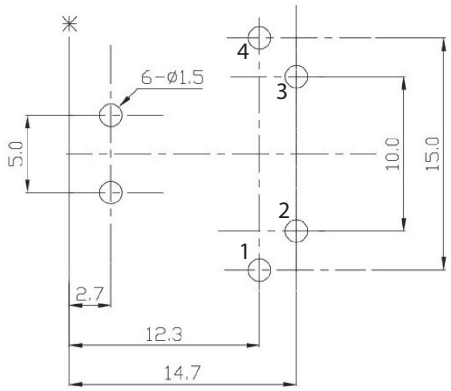

Recommended PCB Layout
Top View
(Date Codes prior to 03/03/2022)

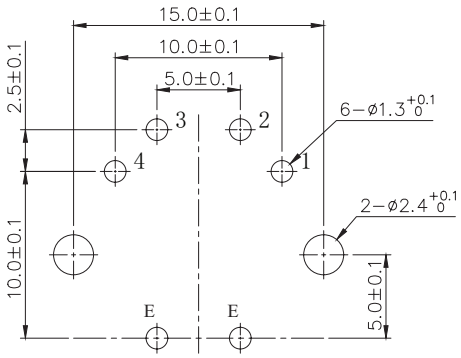

Recommended PCB Layout
Top View
(Date Codes after 03/03/2022)

Downloaded from Arrow.com.

MECHANICAL DRAWING (SDF-50J)

units: mm
tolerance: ±0.3 mm
unless otherwise noted

ITEM	DESCRIPTION	MATERIAL	PLATING/COLOR
1	body	PBT (UL94V-0)	black
2	earth terminal	brass	nickel
3	plate	bakelite	
4	contact	brass	tin

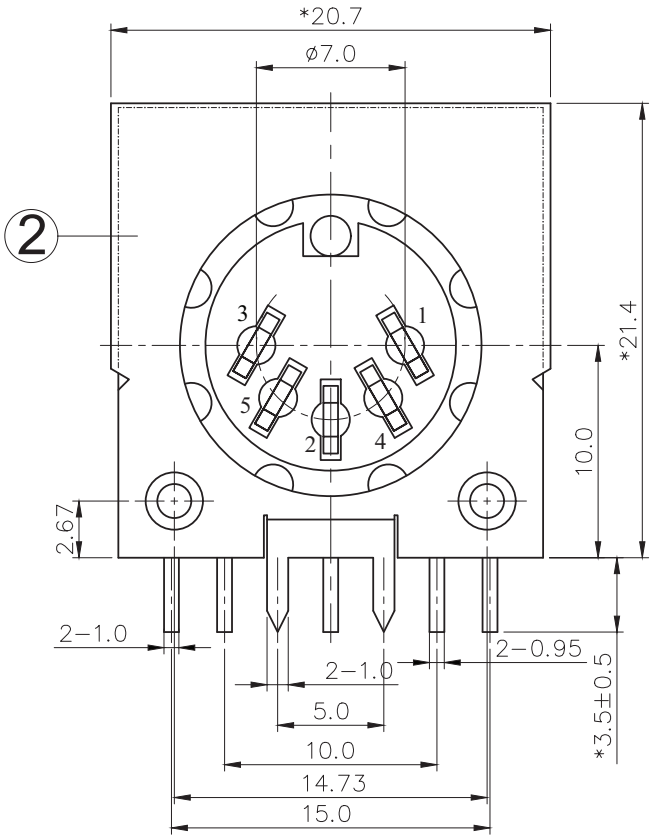

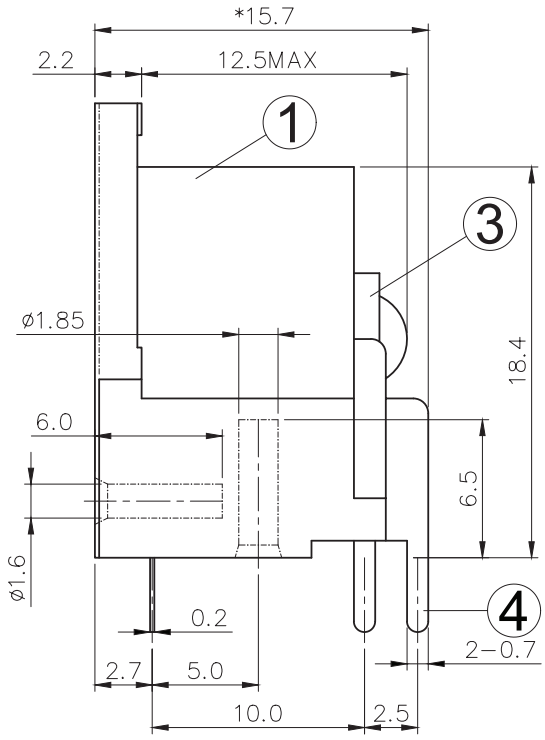

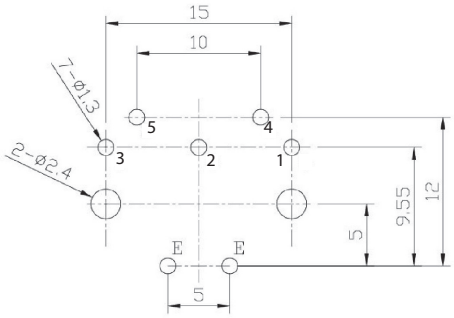

Recommended PCB Layout
Top View
(Date Codes prior to 03/03/2022)

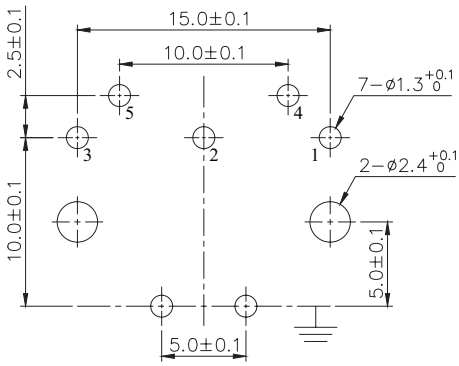

Recommended PCB Layout
Top View
(Date Codes after 03/03/2022)

Downloaded from Arrow.com.

MECHANICAL DRAWING (SDF-60J)

units: mm
tolerance: ±0.3 mm
unless otherwise noted

ITEM	DESCRIPTION	MATERIAL	PLATING/COLOR
1	body	PBT (UL94V-0)	black
2	earth terminal	brass	nickel
3	plate	bakelite	
4	contact	brass	tin

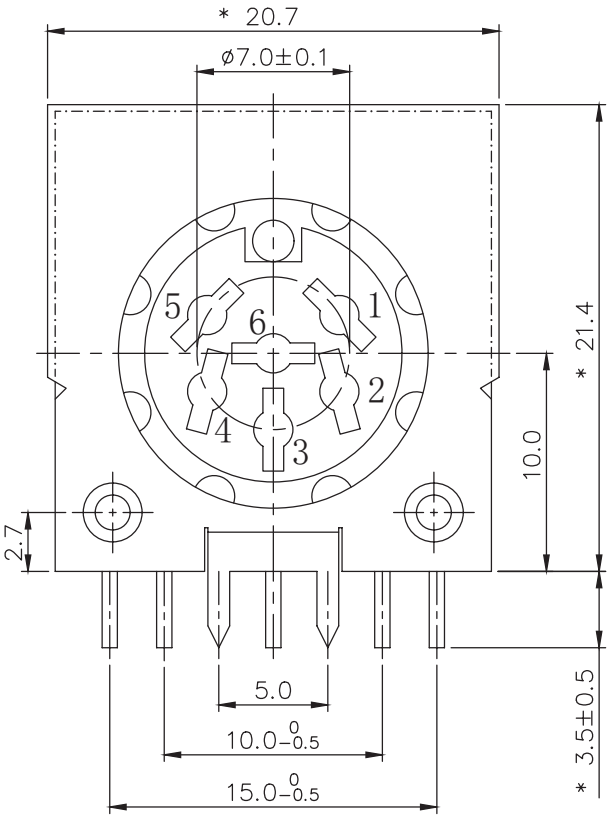

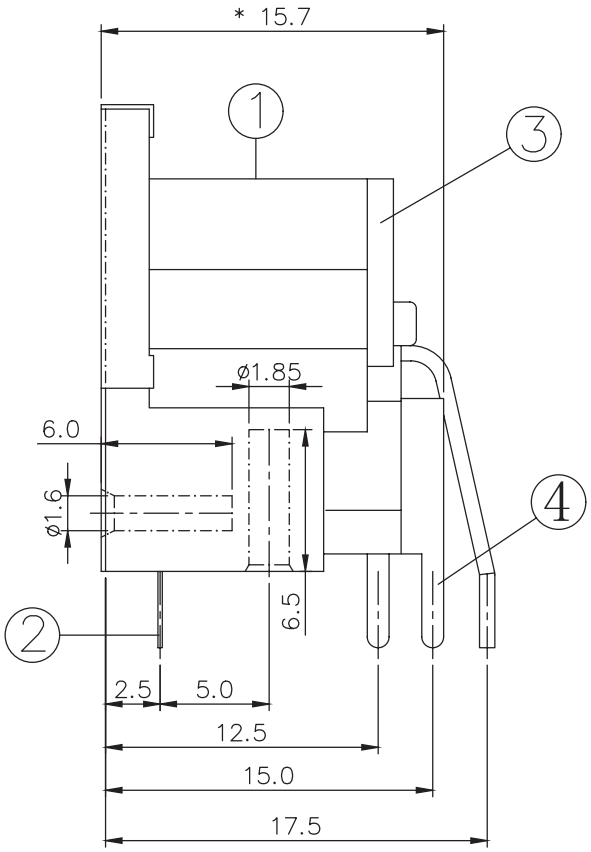

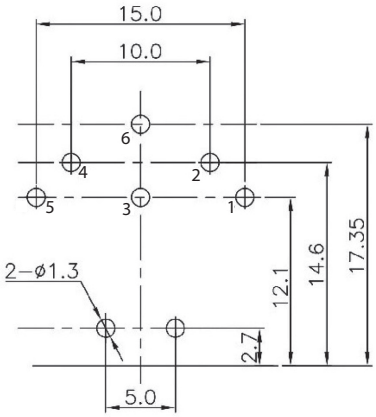

Recommended PCB Layout
Top View
(Date Codes prior to 03/03/2022)

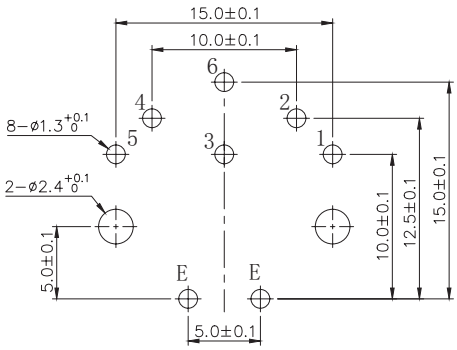

Recommended PCB Layout
Top View
(Date Codes after 03/03/2022)

Downloaded from Arrow.com.

MECHANICAL DRAWING (SDF-70J)

units: mm
tolerance: ±0.2mm

	MATERIAL	PLATING
housing	PBT	black
shielded terminal	brass	nickel
terminal	brass	tin

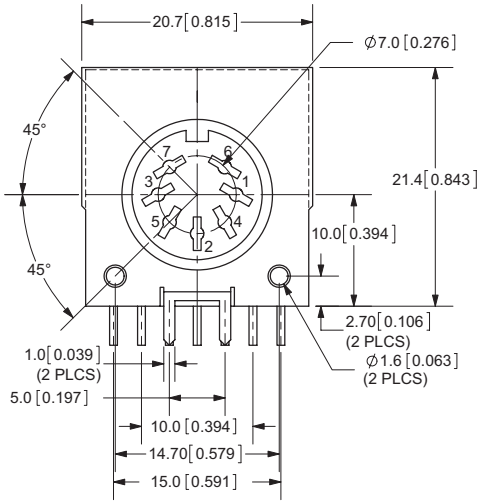

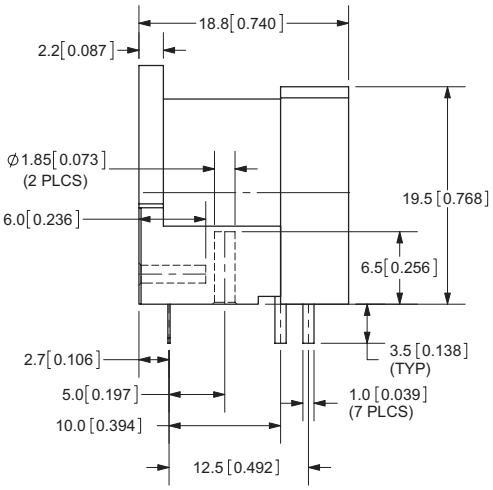

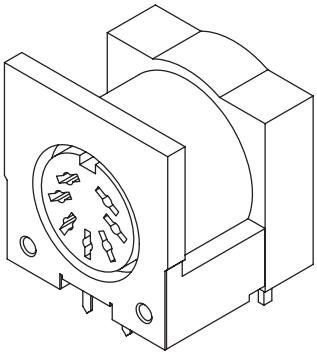

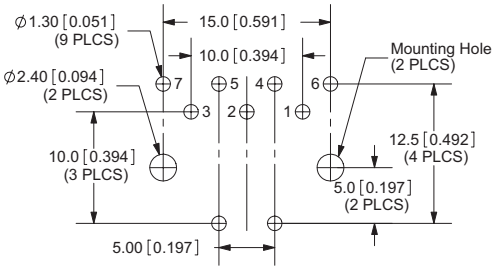

Recommended PCB Layout
Top View

Downloaded from Arrow.com.

MECHANICAL DRAWING (SDF-80J)

units: mm
tolerance: ±0.3 mm
unless otherwise noted

ITEM	DESCRIPTION	MATERIAL	PLATING/COLOR
1	body	PBT (UL94V-0)	black
2	shield terminal	brass	nickel
3	cover	PBT (UL94V-0)	black
4	contact	brass	tin

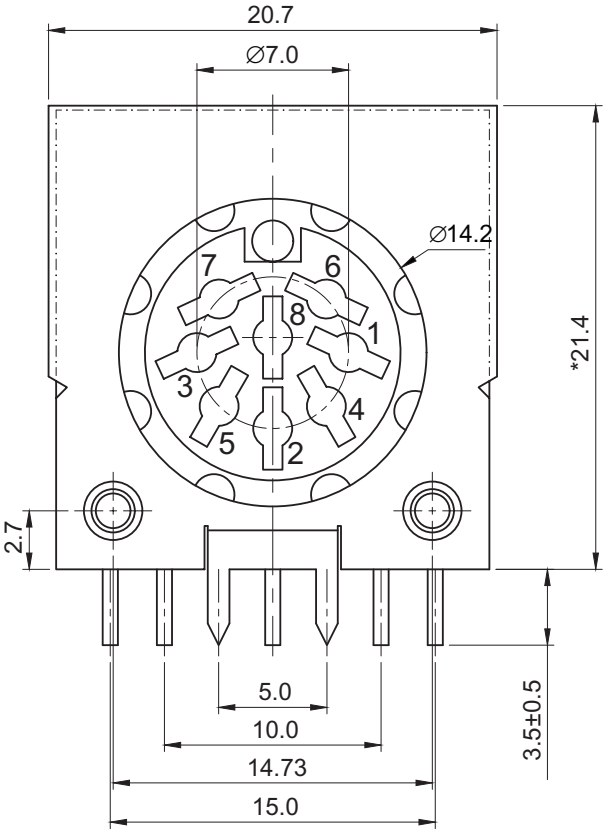

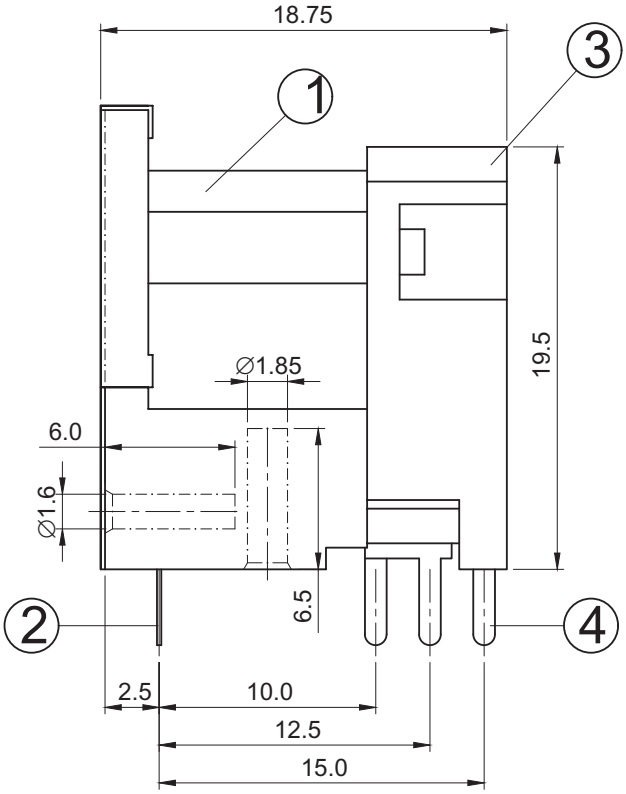

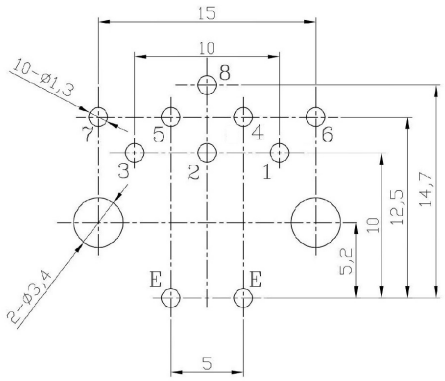

Recommended PCB Layout
Top View
(Date Codes prior to 03/03/2022)

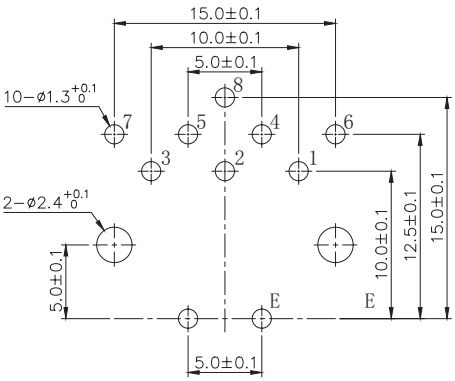

Recommended PCB Layout
Top View
(Date Codes after 03/03/2022)

Downloaded from Arrow.com.

MECHANICAL DRAWING (SDF-130J)

units: mm
tolerance: ±0.30 mm
PCB: ±0.05 mm

		MATERIAL	PLATING
1	terminal	phosphor bronze	silver
2	ground contact	phosphor bronze	silver
3	housing	PBT 4815 UL94V-0	black
4	cover	PBT 4815 UL94V-0	black
5	sealed plate	copper alloy	copper/tin

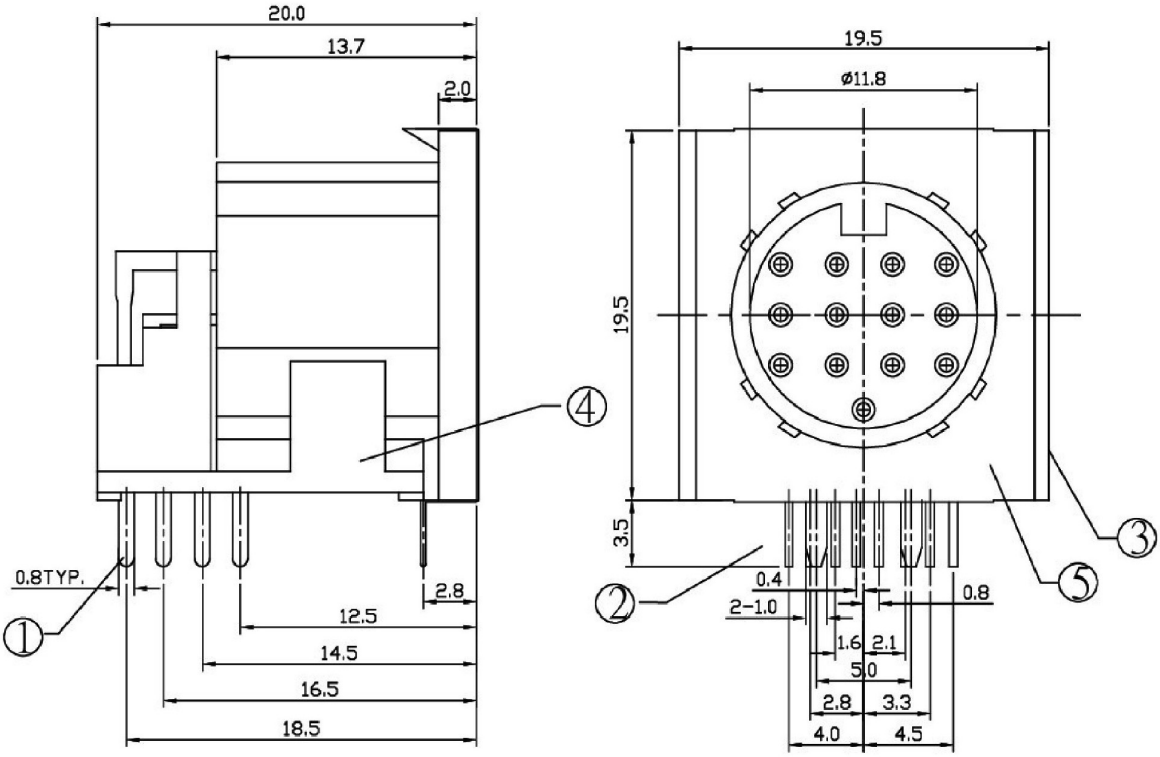

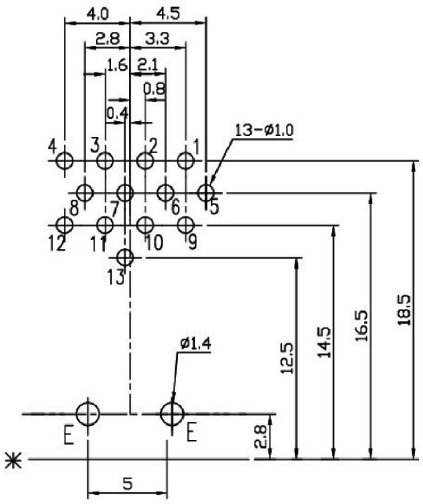

Recommended PCB Layout
Top View

Downloaded from Arrow.com.

REVISION HISTORY

rev.	description	date
1.0	initial release	02/23/2006
1.01	new template applied	04/02/2012
1.02	updated housings	04/05/2012
1.03	corrected SDF-50J and SDF-51J pinouts	07/15/2014
1.04	updated datasheet	09/08/2017
1.05	updated datasheet	07/24/2018
1.06	discontinued model SDF-30J	10/08/2019
1.07	discontinued model SDF-70J	02/17/2020
1.08	changed housing	04/13/2020
1.09	modified design and changed factory for SDF-40J, SDF-50J, SDF-60J, & SDF-80J	02/21/2022
1.10	logo, datasheet style update	08/05/2022
1.11	CUI Devices rebranded to Same Sky	09/12/2024

The revision history provided is for informational purposes only and is believed to be accurate.

Same Sky offers a one (1) year limited warranty. Complete warranty information is listed on our website.

Same Sky reserves the right to make changes to the product at any time without notice. Information provided by Same Sky is believed to be accurate and reliable. However, no responsibility is assumed by Same Sky for its use, nor for any infringements of patents or other rights of third parties which may result from its use.

Same Sky products are not authorized or warranted for use as critical components in equipment that requires an extremely high level of reliability. A critical component is any component of a life support device or system whose failure to perform can be reasonably expected to cause the failure of the life support device or system, or to affect its safety or effectiveness.

Downloaded from Arrow.com.