Alle Rechte vorbehalten/ *All rights reserved*

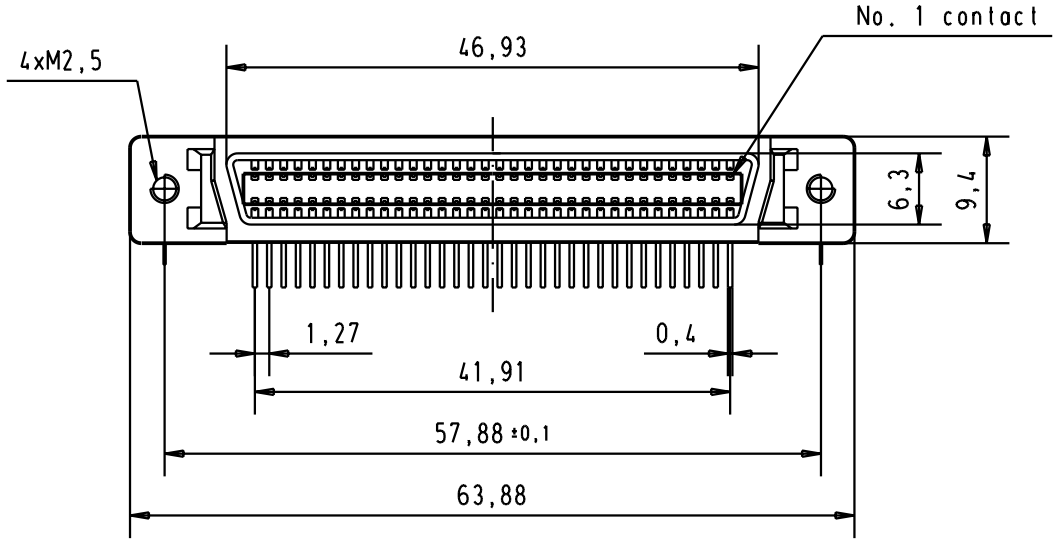

Printed Board Layout
component side

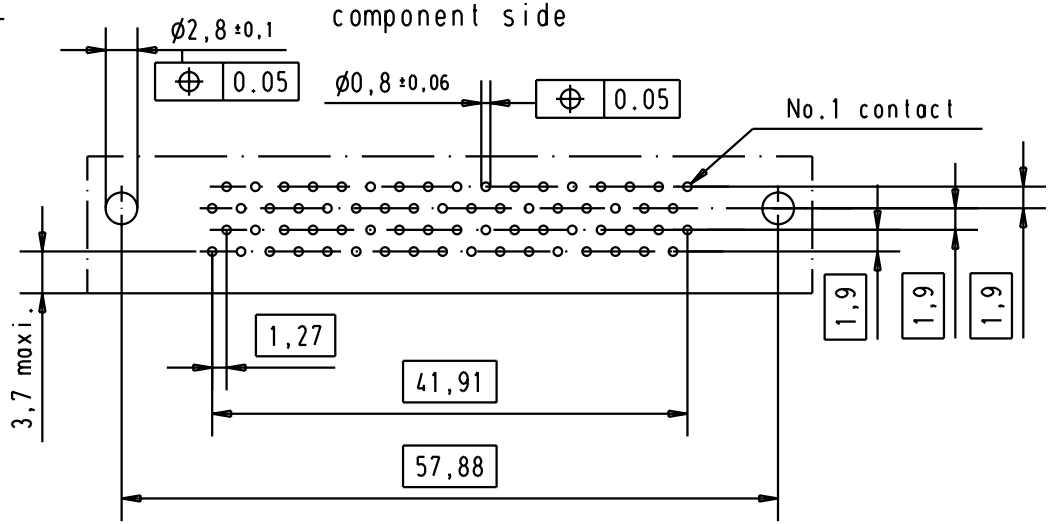

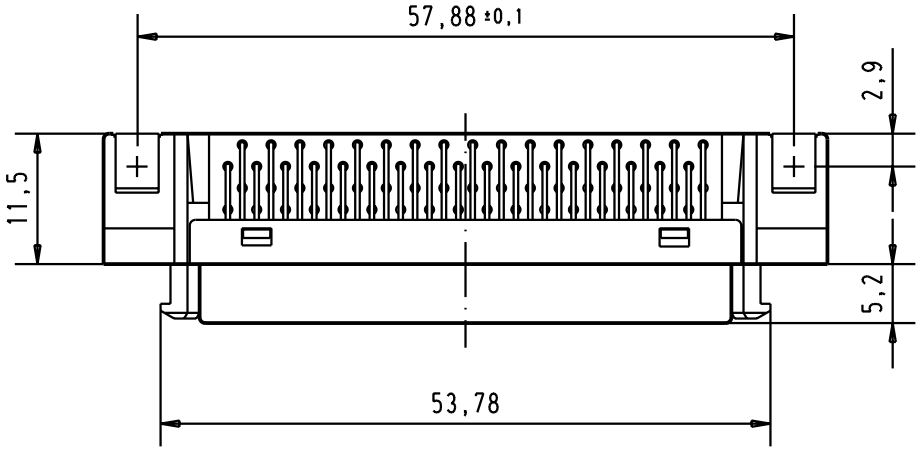

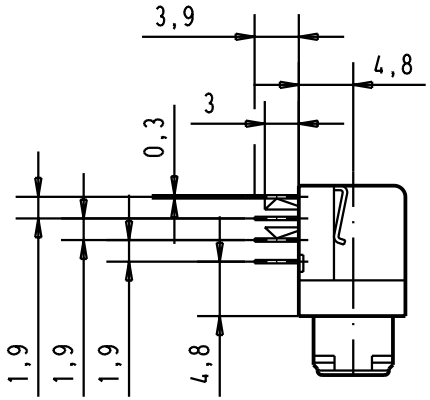

				Dat.	Name			Maßstab/ *Scale*
			Detail.	20-JUN-02	CV	All Dim. in mm Orig. Size DIN A 4	*har.mik®* I/O bellow 68 poles female connector with angled solder pins, clips and fixed latching.	1,5:1
			Insp.					
			Stand.					
31056	20-JUN-02	CV	HARTING EURL F-95972 Paris				TB 60 11 068 5140	Blatt/ *Page* 1/1
Mod.	Dat.	Name					Sub.	

Downloaded from Arrow.com.