NOTES:

1. MATERIAL AND FINISHES:

SOLDER TAG	- BRASS, NICKEL PLATING
HEX NUT	- BRASS, NICKEL PLATING
LOCK WASHER	- BRASS, NICKEL PLATING
RING	- DELRIN, NATURAL
RETAINER RING	- BRASS, NICKEL PLATING
GASKET	- RUBBER, RED
BODY	- BRASS, NICKEL PLATING
CONTACT	- BRASS, GOLD PLATING
INSULATORS	- PTFE & DELRIN, NATURAL

2. ELECTRICAL:

A. IMPEDANCE: 50 OHM
B. FREQUENCY RANGE: DC 0-11 GHz
C. D.W.V: 1500 VRMS, MIN.

3. MECHANICAL:

A. DURABILITY: 500 CYCLES MIN.
B. TEMPERATURE RANGE: -65°C TO +165°C

THIRD ANGLE PROJ.

REVISIONS

REV	DESCRIPTION	DATE	ECO	APPR
A	RELEASE TO MFG.	16-Jul-08		J.W
B	REDRAWN IN PRO/E, SYNCH THE DRAWING; ADD ORIENTATION /RD-DM1608260IS7	31-Aug-16	1821	KEN

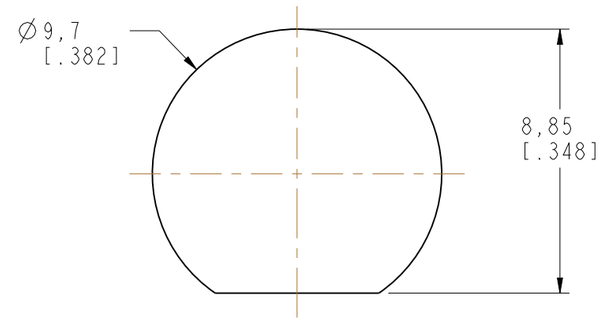

RECOMMENDED
MOUNTING HOLE

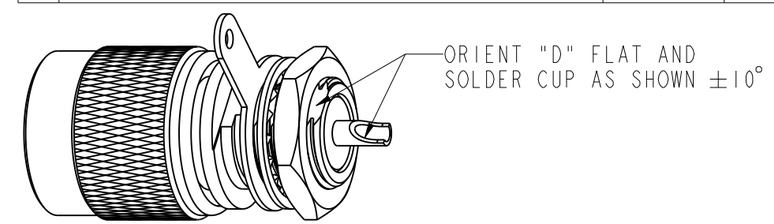

SCALE 2.000

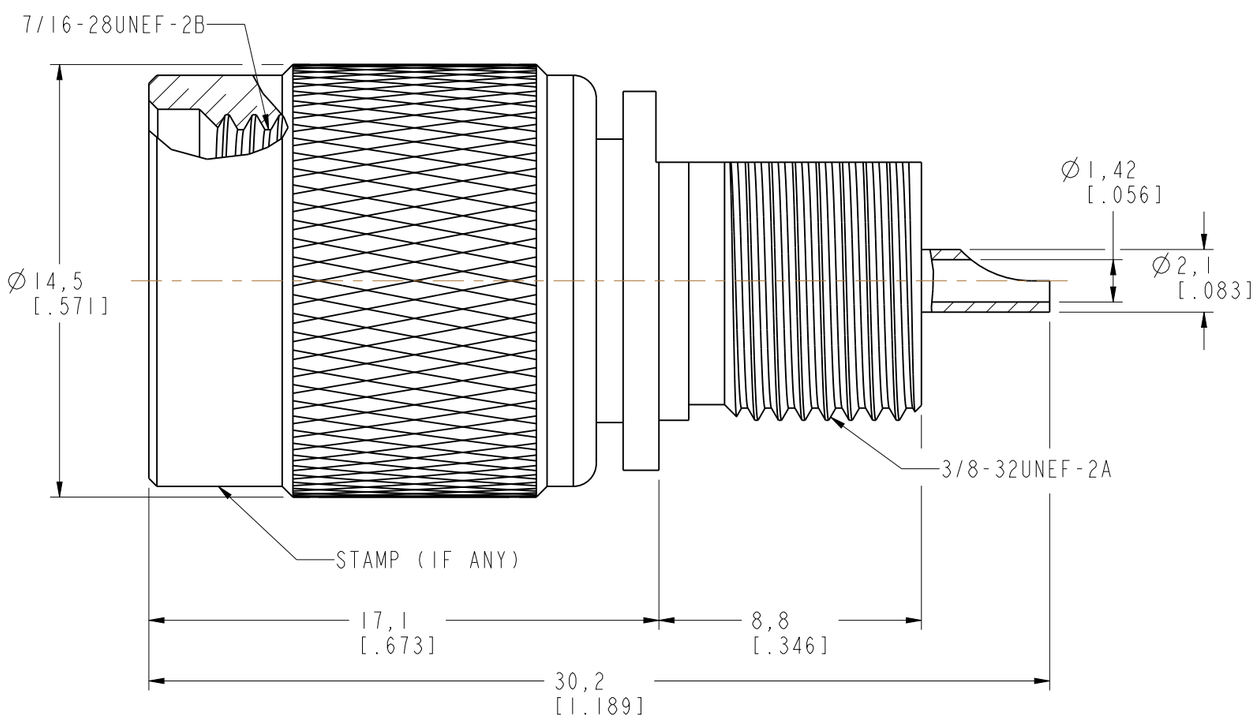

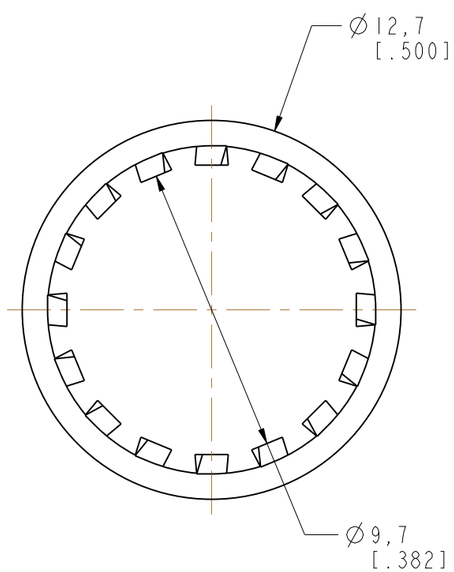

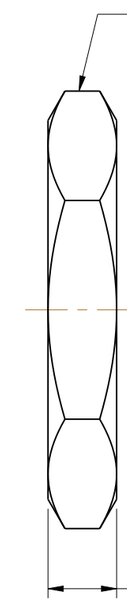

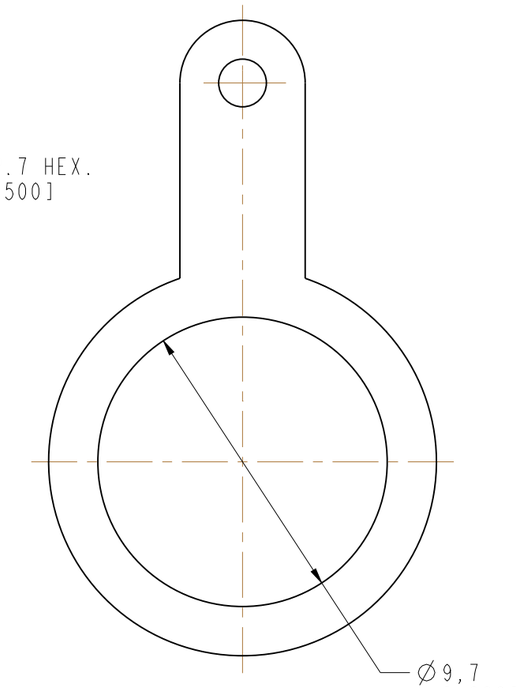

CUSTOMER OUTLINE DRAWING

ALL OTHER SHEETS ARE FOR INTERNAL USE ONLY

UNLESS OTHERWISE SPECIFIED, DIMENSIONS ARE IN METRIC AND TOLERANCES ARE:

<0.5mm	0.5 - 6mm	6 - 30mm	30 - 120mm	ANGLES
± 0.05mm	±0.1mm	±0.2mm	± 0.3mm	±1°

NOTICE - These drawings, specifications, or other data (1) are, and remain the property of Amphenol corp. (2) must be returned upon request; and (3) are confidential and not to be disclosed to any person other than those to whom they are given by Amphenol Corp. the furnishing of these drawings, specifications, or other data by Amphenol Corp., or to any other person to anyone for any purpose is not to be regarded by implication or otherwise in any manner licensing, granting rights to permitting such holder or any other person to manufacture, use or sell any product, process or design, patented or otherwise, that may in any way be related to or disclosed by said drawings, specifications, or other data.

MATERIAL
-
-

REFERENCE
AND

CONFIGURATION LEVEL: In Work

FINISH

DRAWN STAR	DATE 31-Aug-16	
ENGINEER H.HE	DATE 16-Jul-08	
APPROVED HARRY.H	DATE 31-Aug-16	
CAD FILE		

TITLE
TNC BULKHEAD
RECEPTACLE PLUG

SCALE: 5.0:1.0 | SHEET 2 OF 2

DWG SIZE B | REV B

Amphenol RF
www.amphenolrf.com

DRAWING NO. T1351QI-ND3G-50
ITEM NO. 021351AAA01ND5F
PART NO. 122330

Downloaded from Arrow.com.