© – TE Connectivity. All Rights Reserved.

REVISIONS					
P	LTR	DESCRIPTION	DATE	DWN	APVD
	E3	ECR-26-270985	19FEB2026	AP	RK

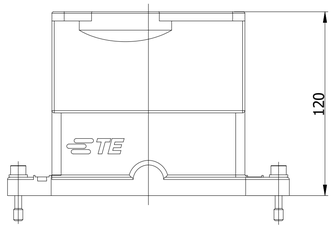

PN 0-1

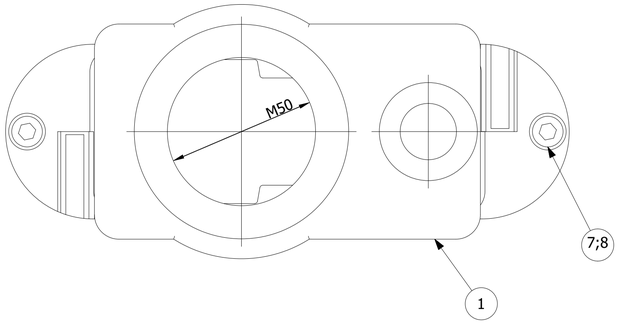

PN 0-2

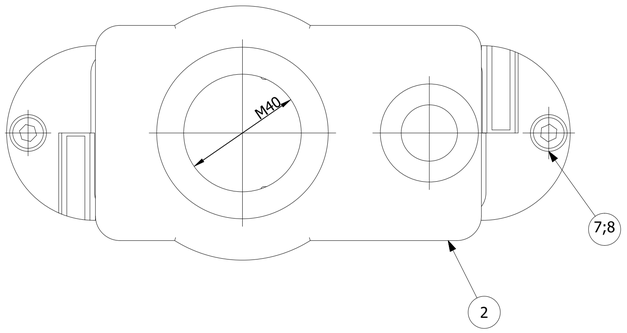

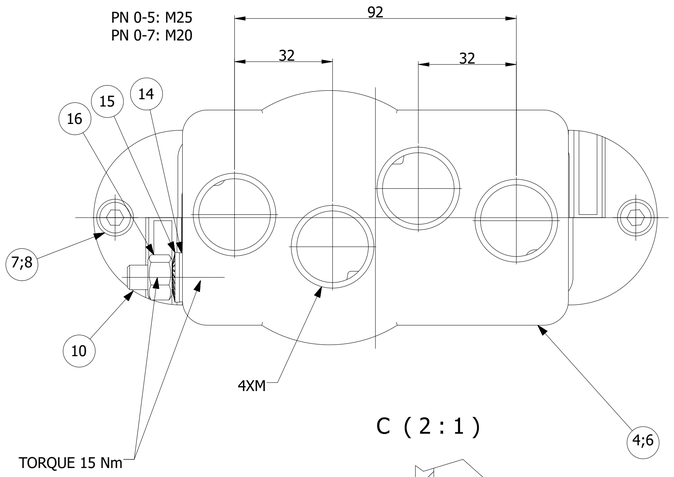

C (2 : 1)

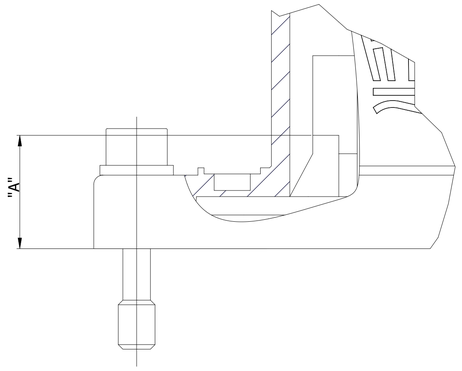

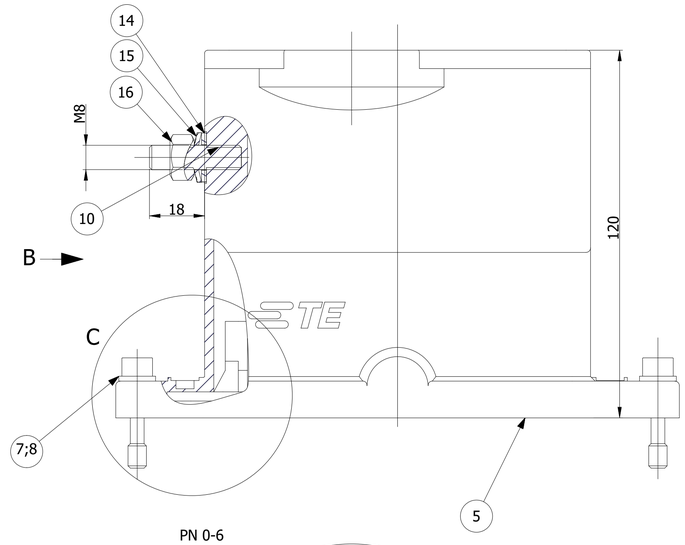

PN 0-6

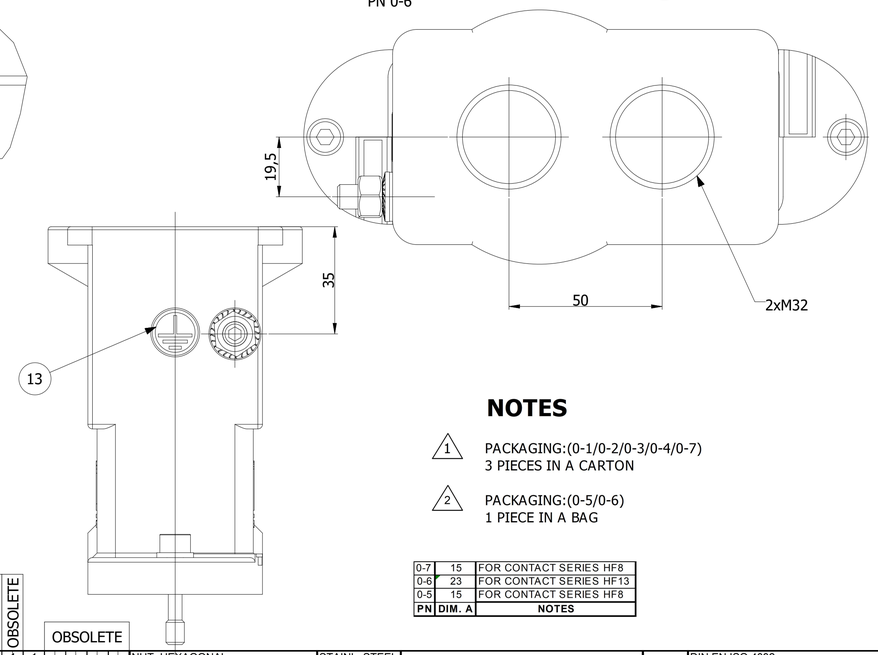

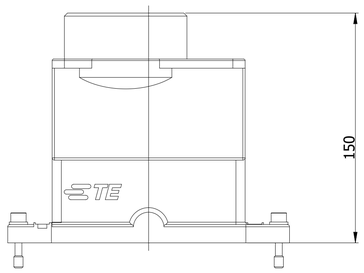

PN 0-3

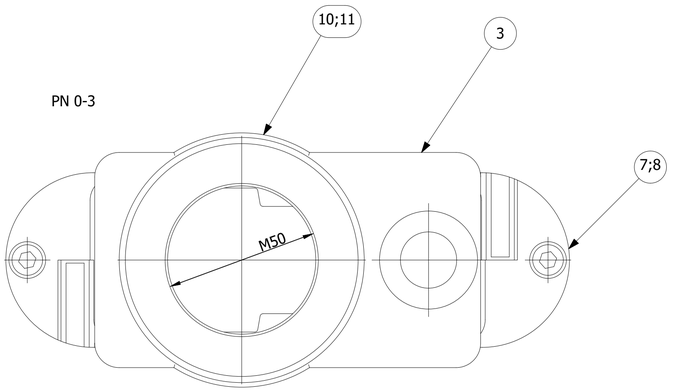

PN 0-4

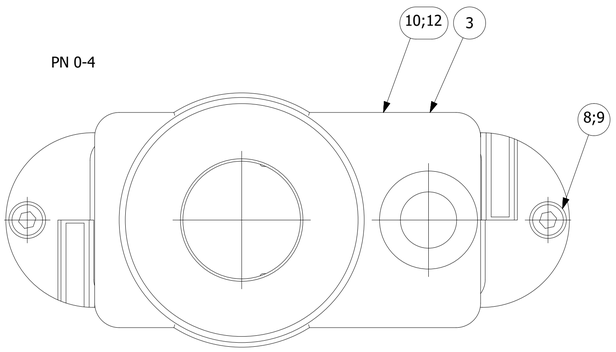

NOTES

1. PACKAGING:(0-1/0-2/0-3/0-4/0-7)
3 PIECES IN A CARTON

2. PACKAGING:(0-5/0-6)
1 PIECE IN A BAG

PN	DIM. A	NOTES
0-7	15	FOR CONTACT SERIES HF8
0-6	23	FOR CONTACT SERIES HF13
0-5	15	FOR CONTACT SERIES HF8

0-7 (OBSOLETE)	0-6 (OBSOLETE)	0-5	0-4	0-3	0-2	0-1	DESCRIPTION	MATERIAL	SURFACE	COLOR	NOTE	IT.
1	1	1					NUT, HEXAGONAL	STAINL. STEEL			DIN EN ISO 4032	16
1	1	1					WASHER, LOCKING	STAINL. STEEL			SKS 8	15
1	1	1					WASHER	STAINL. STEEL			DIN EN ISO 7089	14
1	1	1					PROTECTIVE CONDUCTOR LABEL	PVC		WT/BL	IDENTO LKZ 16 B7	13
				1			ADAPTOR	ALU	SUR TEC 650 CHROMITAL TCP PASSIVATION	BLACK	M72xM40	12
					1		ADAPTOR	ALU	SUR TEC 650 CHROMITAL TCP PASSIVATION	BLACK	M72xM50	11
				1	1		O-RING	NBR		BLACK	Ø70x2	10
1	1	1					THREAD PIN	STAINL. STEEL			M8x30	9
2	2	2	2	2	2	2	WASHER	STAINL. STEEL			B6.4	8
2	2	2	2	2	2	2	SCREW	STAINL. STEEL			DIN EN ISO 4762-M6x30	7
1							HOOD EMV-HF	ALU	SUR TEC 650 CHROMITAL TCP PASSIVATION	BLACK	WITH (GLAND) THREAD 4xM20 1xM18	6
	1						HOOD EMV-HF	ALU	SUR TEC 650 CHROMITAL TCP PASSIVATION	BLACK	WITH (GLAND) THREAD 2xM32 1xM18	5
		1					HOOD EMV-HF	ALU	SUR TEC 650 CHROMITAL TCP PASSIVATION	BLACK	WITH (GLAND) THREAD 4xM25 1xM8	4
			1	1			HOOD EMV-HF	ALU	SUR TEC 650 CHROMITAL TCP PASSIVATION	BLACK	WITH (GLAND) THREAD 1xM72 1xM20	3
					1		HOOD EMV-HF	ALU	SUR TEC 650 CHROMITAL TCP PASSIVATION	BLACK	WITH (GLAND) THREAD 1xM40 1xM20	2
						1	HOOD EMV-HF	ALU	SUR TEC 650 CHROMITAL TCP PASSIVATION	BLACK	WITH (GLAND) THREAD 1xM50 1xM20	1
						X	HF-EMV-K.8.STO.1.M50.G+1.M20.G					
					X		HF-EMV-K.8.STO.1.M40.G+1M20.G					
				X			HF-EMV-K.8.STO.1.M50.A+M20.G					
			X				HF-EMV-K.8.STO.1.M40.A+1M20.G					
		X					HF-EMV-K.8.STO.4.M25.1.M8.G					
	X						HF-EMV-K.8.STO.2.M32.1.M8.G					
X							HF-EMV-K.8.STO.4.M20.1.M8.G					

THIS DRAWING IS A CONTROLLED DOCUMENT.

DIMENSIONS: mm

TOLERANCES UNLESS OTHERWISE SPECIFIED:
0 PLC ± –
1 PLC ± –
2 PLC ± –
3 PLC ± –
4 PLC ± –
ANGLES ± –
a. ISO 8015 - c. ISO 2768 - m-H
b. ISO 286-1 - d. DIN 16901 - f-M

MATERIAL –

FINISH –

DWN	H.BRAUN	02.06.2006
CHK	T.SCHNURPFEIL	12.09.2001
APVD	T.SCHNURPFEIL	12.09.2001

PRODUCT SPEC: 108-74038

APPLICATION SPEC: –

WEIGHT: 0.001

TE Connectivity

NAME: ASS'Y HOOD SERIES HF , SIZE 8 –

SIZE	CAGE CODE	DRAWING NO	RESTRICTED TO
A1	00779	C-1102191	–

CUSTOMER DRAWING

SCALE	SHEET	OF	REV
1:1	1	1	E3

4805 (1/15)

Downloaded from Arrow.com.