VICOR CONFIDENTIAL
THIS DOCUMENT AND THE DATA DISCLOSED HEREIN OR HEREWITH IS NOT TO BE REPRODUCED, USED OR DISCLOSED IN WHOLE OR IN PART TO ANYONE WITHOUT THE PERMISSION OF VICOR CORP.

REV.	DESCRIPTION	INTL	DATE	APVD
1	RELEASE PER E161031b	GCK	11/22/16	RH

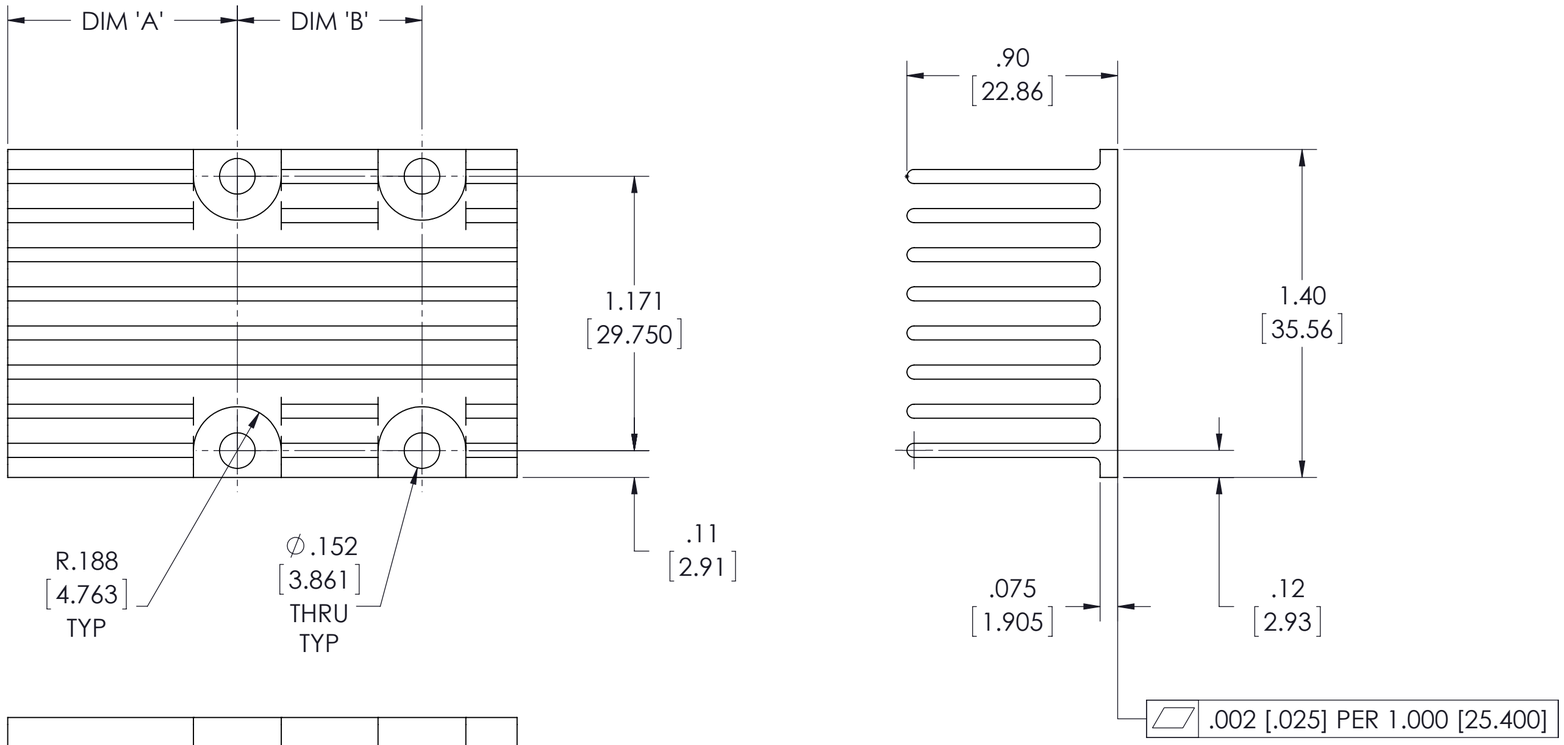

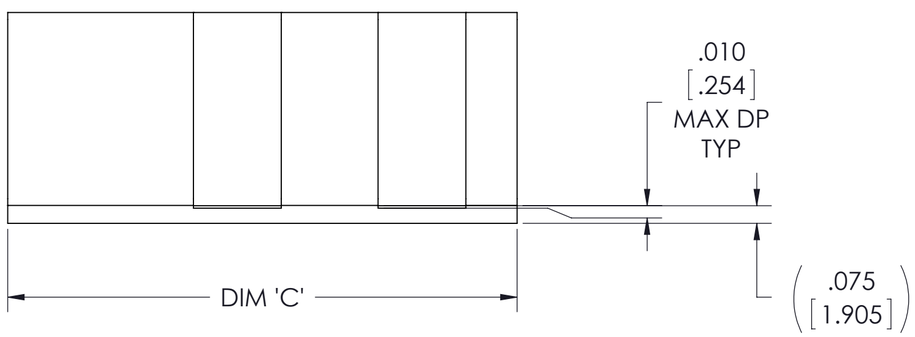

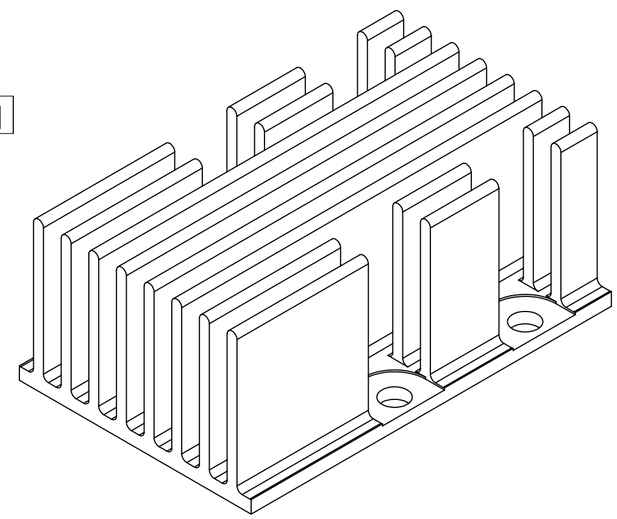

BOM NUMBER	PRODUCT	DIM 'A'	DIM 'B'	DIM 'C'
43807-01	2214 (0 STAGE) 2223	0.57 [14.55]	N/A	1.23 [31.16]
43807-02	2814 (1 STAGE) 2223	0.95 [24.22]	N/A	1.60 [40.69]
43807-03	2814 (0 STAGE) 3623	0.57 [14.55]	0.789 [20.033]	1.77 [45.04]
43807-04	3414 (1 STAGE) 3623	0.98 [25.00]	0.789 [20.033]	2.18 [55.25]
43807-05	3714 (1 STAGE) 4623	0.98 [25.00]	1.150 [29.200]	2.55 [64.65]
43807-06	3814 (0 STAGE) 2361	0.39 [10.03]	1.277 [32.430]	2.56 [65.11]
43807-07	3814 (0 STAGE) 2361 NBM	0.39 [10.03]	1.277 [32.430]	2.56 [65.11]
43807-08	4414 (1 STAGE) 2361	0.98 [25.00]	1.277 [32.430]	3.15 [80.07]
43807-09	4414 (1 STAGE) 6123	0.98 [25.00]	1.757 [44.625]	3.15 [80.07]
43807-10	4914 (2 STAGE) 6123	1.38 [34.95]	1.757 [44.625]	3.54 [89.88]
43807-11	5314 (0 STAGE) 2392	0.54 [13.84]	2.490 [63.250]	3.93 [99.77]
43807-12	5314 (0 STAGE) 9223	0.54 [13.84]	2.970 [75.445]	3.93 [99.77]
43807-13	5614 (1 STAGE) 2392	0.98 [25.00]	2.490 [63.250]	4.24 [107.57]
43807-14	5614 (1 STAGE) 9223	0.98 [25.00]	2.970 [75.445]	4.24 [107.57]
43807-15	6114 (2 STAGE) 9223	1.38 [34.97]	2.970 [75.445]	4.85 [123.30]

NOTES:

1. CLEAR FINISH, RoHS COMPLIANT PER CST-0001, LATEST REVISION PER
   A.) CHROMIUM FREE, OR

   B.) TRIVALENT CHROMIUM IN ACCORDANCE WITH MIL-DTL-5541, TYPE II, CLASS 1A OR 3. SEE CST-0003 FOR TYPES OF AVAILABLE FINISHES.

2. SEE CHART FOR BOM NUMBERS
   SEE BOMS FOR PARTS LIST.

3. MATERIAL: MAKE FROM AAVID EXTRUSION P/N 74765 OR EQUIVALENT (VICOR P/N 42596)

4. REMOVE ALL BURRS AND SHARP EDGES.

DRAWN BY	DATE
Matthew Biron	2/24/2016

UNLESS OTHERWISE SPECIFIED DIMENSIONS ARE : INCH / [MM]

TOLERANCES ARE:
DECIMALS X.XX [X.XX] = ±0.01 [0.25]
X.XXX [X.XXX] = ±0.005 [0.127]
ANGLES ±1°

THIRD ANGLE PROJECTION

DO NOT SCALE DRAWING

VICOR SWD

DWG HEAT SINK LF .900 TALL ADAPTERS

SIZE	CAGE CODE	DWG NO	REV
C	67131	43755	1

SCALE 2:1 SHEET 1 OF 1

Downloaded from Arrow.com.