NLAST4051

Analog Multiplexer/ Demultiplexer

TTL Compatible, Single−Pole, 8−Position Plus Common Off

ON Semiconductor®

www.onsemi.com

The NLAST4051 is an improved version of the MC14051 and MC74HC4051 fabricated in sub−micron Silicon Gate CMOS technology for lower $R_{DS(on)}$ resistance and improved linearity with low current. This device may be operated either with a single supply or dual supply up to ±3 V to pass a 6 V_{PP} signal without coupling capacitors.

When operating in single supply mode, it is only necessary to tie V_{EE}, pin 7 to ground. For dual supply operation, V_{EE} is tied to a negative voltage, not to exceed maximum ratings. Translation is provided in the device, the Address and Inhibit are standard TTL level compatible. For CMOS compatibility see NLAS4051. Pin for pin compatible with all industry standard versions of '4051.'

Features

- Improved $R_{DS(on)}$ Specifications
- Pin for Pin Replacement for MAX4051 and MAX4051A
  - One Half the Resistance Operating at 5.0 V
- Single or Dual Supply Operation
  - Single 3.0 – 5.0 V Operation, or Dual ±3 V Operation
  - With V_{CC} of 3.0 to 3.3 V, Device Can Interface with 1.8 V Logic, No Translators Needed
  - Address and Inhibit Logic are Over−Voltage Tolerant and May Be Driven Up +6 V Regardless of V_{CC}
- Address and Inhibit Pins Standard TTL Compatible
  - Greatly Improved Noise Margin Over MAX4051 and MAX4051A
  - True TTL Compatibility V_{IL} = 0.8 V, V_{IH} = 2.0 V
- Improved Linearity Over Standard HC4051 Devices
- Space Saving TSSOP Package
- NLV Prefix for Automotive and Other Applications Requiring Unique Site and Control Change Requirements; AEC−Q100 Qualified and PPAP Capable
- These Devices are Pb−Free, Halogen Free/BFR Free and are RoHS Compliant

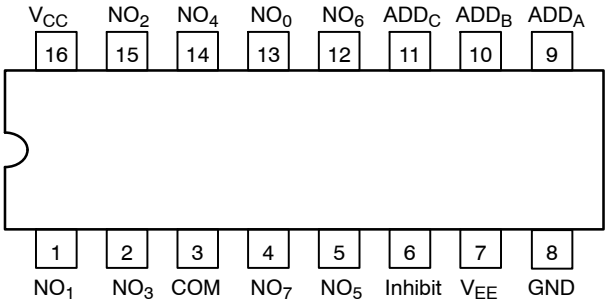

Figure 1. Pin Connection
(Top View)

MARKING DIAGRAM

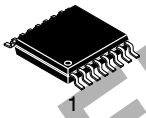

TSSOP−16
DT SUFFIX
CASE 948F

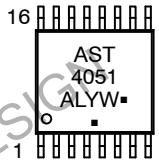

A = Assembly Location
L = Wafer Lot
Y = Year
W = Work Week
▪ = Pb−Free Package
(Note: Microdot may be in either location)

ORDERING INFORMATION

See detailed ordering and shipping information in the package dimensions section on page 10 of this data sheet.

DISCONTINUED
THIS DEVICE IS NOT RECOMMENDED FOR NEW DESIGN
PLEASE CONTACT YOUR onsemi
REPRESENTATIVE FOR INFORMATION

Downloaded from Arrow.com.

TRUTH TABLE

Inhibit	Address			ON SWITCHES*
	C	B	A	
1	X don't care	X don't care	X don't care	All switches open
0	0	0	0	COM–NO_0
0	0	0	1	COM–NO_1
0	0	1	0	COM–NO_2
0	0	1	1	COM–NO_3
0	1	0	0	COM–NO_4
0	1	0	1	COM–NO_5
0	1	1	0	COM–NO_6
0	1	1	1	COM–NO_7

*NO and COM pins are identical and interchangeable. Either may be considered an input or output; signals pass equally well in either direction.

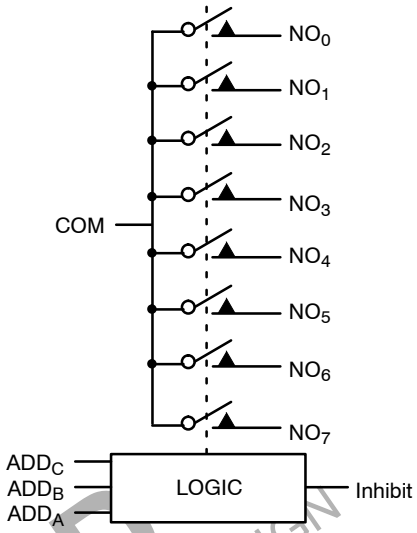

Figure 2. Logic Diagram

NUED
NEW DESIGN

MAXIMUM RATINGS

Symbol	Parameter		Value	Unit
V_{EE}	Negative DC Supply Voltage	(Referenced to GND)	−7.0 to +0.5	V
V_{CC}	Positive DC Supply Voltage (Note 1)	(Referenced to GND) (Referenced to V_{EE})	−0.5 to +7.0 −0.5 to +7.0	V
V_{IS}	Analog Input Voltage		V_{EE} −0.5 to V_{CC} +0.5	V
V_{IN}	Digital Input Voltage	(Referenced to GND)	−0.5 to 7.0	V
I	DC Current, Into or Out of Any Pin		±50	mA
T_{STG}	Storage Temperature Range		−65 to +150	°C
T_L	Lead Temperature, 1 mm from Case for 10 Seconds		260	°C
T_J	Junction Temperature under Bias		+150	°C
θ_{JA}	Thermal Resistance		164	°C/W
P_D	Power Dissipation in Still Air		450	mW
MSL	Moisture Sensitivity		Level 1	
F_R	Flammability Rating	Oxygen Index: 30% − 35%	UL 94 V−0 @ 0.125 in	
V_{ESD}	ESD Withstand Voltage	Human Body Model (Note 2) Machine Model (Note 3) Charged Device Model (Note 4)	>2000 >200 >1000	V
$I_{LATCHUP}$	Latchup Performance	Above V_{CC} and Below GND at 125°C (Note 5)	±300	mA

Stresses exceeding those listed in the Maximum Ratings table may damage the device. If any of these limits are exceeded, device functionality should not be assumed, damage may occur and reliability may be affected.

1. The absolute value of $V_{CC} \pm |V_{EE}| \leq 7.0$.
2. Tested to EIA/JESD22−A114−A.
3. Tested to EIA/JESD22−A115−A.
4. Tested to JESD22−C101−A.
5. Tested to EIA/JESD78.

Downloaded from Arrow.com.

RECOMMENDED OPERATING CONDITIONS

Symbol	Parameter		Min	Max	Unit
V_{EE}	Negative DC Supply Voltage	(Referenced to GND)	−5.5	GND	V
V_{CC}	Positive DC Supply Voltage	(Referenced to GND) (Referenced to V_{EE})	2.5 2.5	5.5 6.6	V
V_{IS}	Analog Input Voltage		V_{EE}	V_{CC}	V
V_{IN}	Digital Input Voltage	(Note 6) (Referenced to GND)	0	5.5	V
T_A	Operating Temperature Range, All Package Types		−55	125	°C
t_r, t_f	Input Rise/Fall Time (Channel Select or Enable Inputs)	V_{CC} = 3.0 V ± 0.3 V V_{CC} = 5.0 V ± 0.5 V	0 0	100 20	ns/V

Functional operation above the stresses listed in the Recommended Operating Ranges is not implied. Extended exposure to stresses beyond the Recommended Operating Ranges limits may affect device reliability.

6. Unused digital inputs may not be left open. All digital inputs must be tied to a high−logic voltage level or a low−logic input voltage level.

DC CHARACTERISTICS − Digital Section (Voltages Referenced to GND)

Symbol	Parameter	Condition	V_{CC} V	Guaranteed Limit −55 to 25°C	≤85°C	≤125°C	Unit
V_{IH}	Minimum High−Level Input Voltage, Address or Inhibit Inputs		3.0 4.5 5.5	1.6 2.0 2.0	1.6 2.0 2.0	1.6 2.0 2.0	V
V_{IL}	Maximum Low−Level Input Voltage, Address or Inhibit Inputs		3.0 4.5 5.5	0.5 0.8 0.8	0.5 0.8 0.8	0.5 0.8 0.8	V
I_{IN}	Maximum Input Leakage Current, Address or Inhibit Inputs	V_{IN} = 6.0 or GND	0 V to 6.0 V	±0.1	±1.0	±1.0	μA
I_{CC}	Maximum Quiescent Supply Current (per Package)	Address or Inhibit and V_{IS} = V_{CC} or GND	6.0	4.0	40	80	μA

Product parametric performance is indicated in the Electrical Characteristics for the listed test conditions, unless otherwise noted. Product performance may not be indicated by the Electrical Characteristics if operated under different conditions.

DISCONTINUED
IS NOT RECOMMENDED FOR NEW DESIGN
PLEASE CONTACT YOUR onsemi
REPRESENTATIVE FOR INFORMATION

DC ELECTRICAL CHARACTERISTICS − Analog Section

Symbol	Parameter	Test Conditions	V_{CC} V	V_{EE} V	Guaranteed Limit −55 to 25°C	≤85°C	≤125°C	Unit
R_{ON}	Maximum "ON" Resistance	V_{IN} = V_{IL} or V_{IH} V_{IS} = (V_{EE} to V_{CC}) $\|I_S\|$ = 10 mA (Figures 4 thru 9)	3.0 4.5 3.0	0 0 −3.0	86 37 26	108 46 33	120 55 37	Ω
ΔR_{ON}	Maximum Difference in "ON" Resistance Between Any Two Channels in the Same Package	V_{IN} = V_{IL} or V_{IH}, V_{IS}= 2.0 V V_{IS}= 3.0 V $\|I_S\|$ = 10 mA, V_{IS}= 2.0 V	3.0 4.5 3.0	0 0 −3.0	15 13 10	20 18 15	20 18 15	Ω
$Rflat_{(ON)}$	ON Resistance Flatness	V_{COM} = 1, 2, 3.5 V V_{COM} = 2, 0, 2 V	4.5 3.0	 3.0	4 2	4 2	5 3	Ω
$I_{NC(OFF)}$ $I_{NO(OFF)}$	Maximum Off−Channel Leakage Current	Switch Off V_{IN} = V_{IL} or V_{IH} V_{IO} = V_{CC} −1.0 V or V_{EE} +1.0 V (Figure 17)	6.0 3.0	0 −3.0	0.1 0.1	5.0 5.0	100 100	nA
$I_{COM(ON)}$	Maximum On−Channel Leakage Current, Channel−to−Channel	Switch On V_{IO} = V_{CC} −1.0 V or V_{EE} +1.0 V (Figure 17)	6.0 3.0	0 −3.0	0.1 0.1	5.0 5.0	100 100	nA

Downloaded from Arrow.com.

AC CHARACTERISTICS (Input $t_r = t_f = 3$ ns)

Symbol	Parameter	Test Conditions	V_{CC} V	V_{EE} V	Guaranteed Limit −55 to 25°C Min	Typ*	≤85°C	≤125°C	Unit
t_{BBM}	Minimum Break−Before−Make Time	$V_{IN} = V_{IL}$ or V_{IH} $V_{IS} = V_{CC}$ R_L = 300 Ω, C_L = 35 pF (Figure 19)	3.0 4.5 3.0	0.0 0.0 −3.0	1.0 1.0 1.0	6.5 5.0 3.5	– – –	– – –	ns

*Typical Characteristics are at 25°C.

AC CHARACTERISTICS (C_L = 35 pF, Input $t_r = t_f = 3$ ns)

Symbol	Parameter	V_{CC} V	V_{EE} V	Guaranteed Limit −55 to 25°C Min	Typ	Max	≤85°C Min	Max	≤125°C Min	Max	Unit
t_{TRANS}	Transition Time (Address Selection Time) (Figure 18)	2.5 3.0 4.5 3.0	0 0 0 −3.0			40 28 23 23		45 30 25 25		50 35 30 28	ns
t_{ON}	Turn−on Time (Figures 14, 15, 20, and 21) Enable to N_O or N_C	2.5 3.0 4.5 3.0	0 0 0 −3.0			40 28 23 23		45 30 25 25		50 35 30 28	ns
t_{OFF}	Turn−off Time (Figures 14, 15, 20, and 21) Enable to N_O or N_C	2.5 3.0 4.5 3.0	0 0 0 −3.0			40 28 23 23		45 30 25 25		50 35 30 28	ns

		Typical @ 25°C, V_{CC} = 5.0 V	
C_{IN}	Maximum Input Capacitance,Select Inputs	8	pF
C_{NO} or C_{NC}	Analog I/O	10	
C_{COM}	Common I/O	10	
$C_{(ON)}$	Feedthrough	1.0	

ADDITIONAL APPLICATION CHARACTERISTICS (GND = 0 V)

Symbol	Parameter	Condition	V_{CC} V	V_{EE} V	Typ 25°C	Unit
BW	Maximum On−Channel Bandwidth or Minimum Frequency Response	V_{IS} = ½ ($V_{CC} - V_{EE}$) Source Amplitude = 0 dBm (Figures 10 and 22)	3.0 4.5 6.0 3.0	0.0 0.0 0.0 −3.0	80 90 95 95	MHz
V_{ISO}	Off−Channel Feedthrough Isolation	f = 100 kHz; V_{IS} = ½ ($V_{CC} - V_{EE}$) Source = 0 dBm (Figures 12 and 22)	3.0 4.5 6.0 3.0	0.0 0.0 0.0 −3.0	−93 −93 −93 −93	dB
V_{ONL}	Maximum Feedthrough On Loss	V_{IS} = ½ ($V_{CC} - V_{EE}$) Source = 0 dBm (Figures 10 and 22)	3.0 4.5 6.0 3.0	0.0 0.0 0.0 −3.0	−2 −2 −2 −2	dB
Q	Charge Injection	$V_{IN} = V_{CC}$ to V_{EE}, f_{IS} = 1 kHz, $t_r = t_f$ = 3 ns R_{IS} = 0 Ω, C_L= 1000 pF, Q = $C_L * \Delta V_{OUT}$ (Figures 16 and 23)	5.0 3.0	0.0 −3.0	9.0 12	pC
THD	Total Harmonic Distortion THD + Noise	f_{IS} = 1 MHz, R_L = 10 KΩ, C_L = 50 pF, V_{IS} = 5.0 V_{PP} sine wave V_{IS} = 6.0 V_{PP} sine wave (Figure 13)	6.0 3.0	0.0 −3.0	0.10 0.05	%

DISCONTINUED
THIS DEVICE IS NOT RECOMMENDED FOR NEW DESIGN
PLEASE CONTACT YOUR onsemi
REPRESENTATIVE FOR INFORMATION

Downloaded from Arrow.com.

TYPICAL CHARACTERISTICS

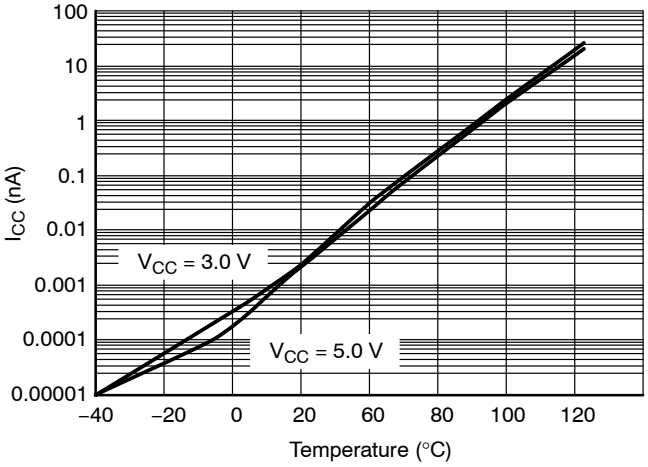

Figure 3. I_{CC} versus Temp, V_{CC} = 3 V and 5 V

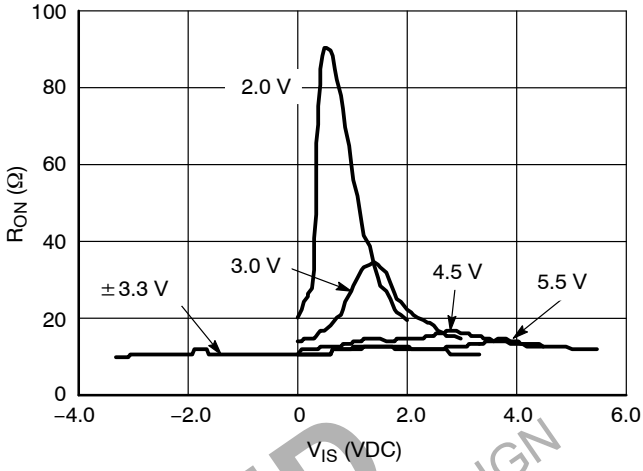

Figure 4. R_{ON} versus V_{CC}, Temp = 25°C

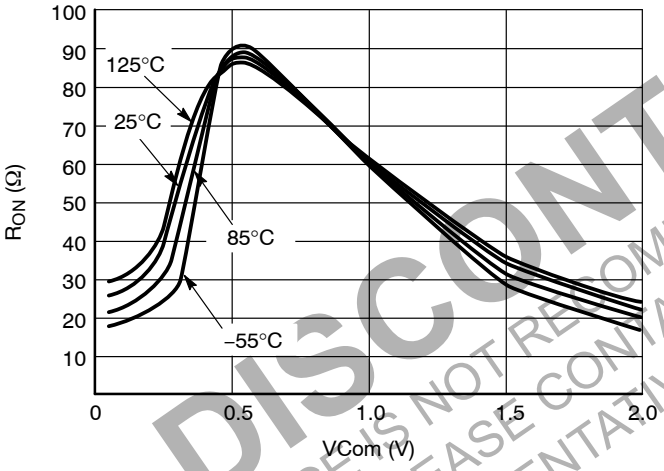

Figure 5. Typical On Resistance
V_{CC} = 2.0 V, V_{EE} = 0 V

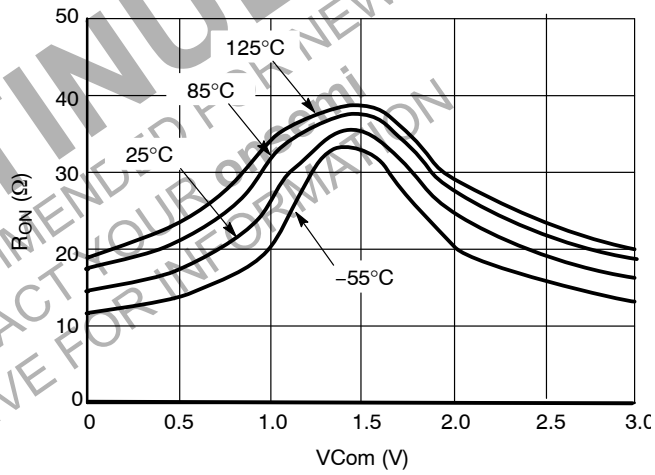

Figure 6. Typical On Resistance
V_{CC} = 3.0 V, V_{EE} = 0 V

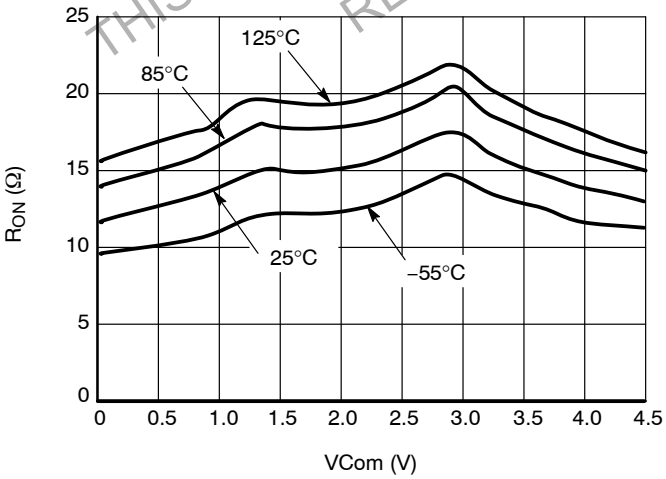

Figure 7. Typical On Resistance
V_{CC} = 4.5 V, V_{EE} = 0 V

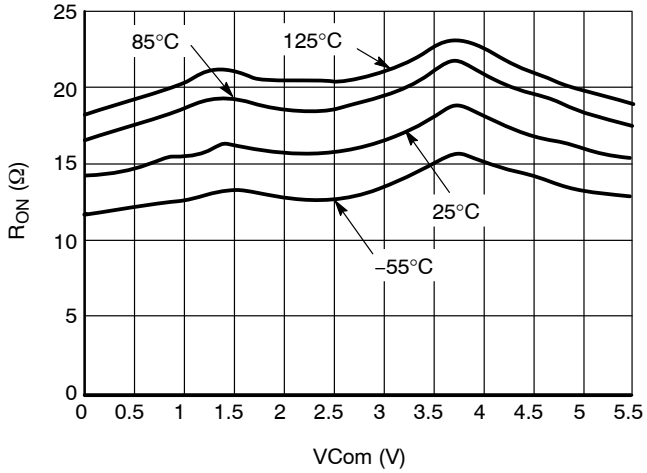

Figure 8. Typical On Resistance
V_{CC} = 5.5 V, V_{EE} = 0 V

DISCONTINUED
THIS DEVICE IS NOT RECOMMENDED FOR A NEW DESIGN
PLEASE CONTACT YOUR onsemi
REPRESENTATIVE FOR INFORMATION

Downloaded from Arrow.com.

TYPICAL CHARACTERISTICS

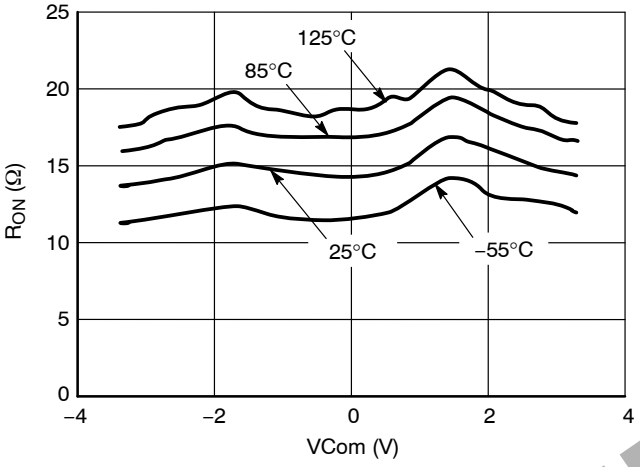

Figure 9. Typical On Resistance
V_{CC} = 3.3 V, V_{EE} = −3.3 V

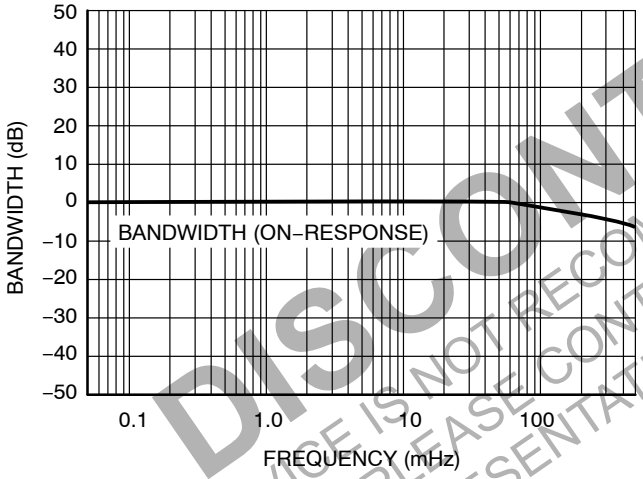

Figure 10. Bandwidth

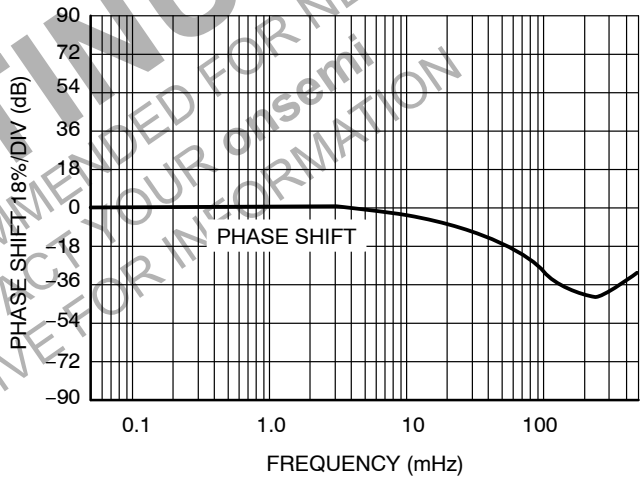

Figure 11. Phase Shift

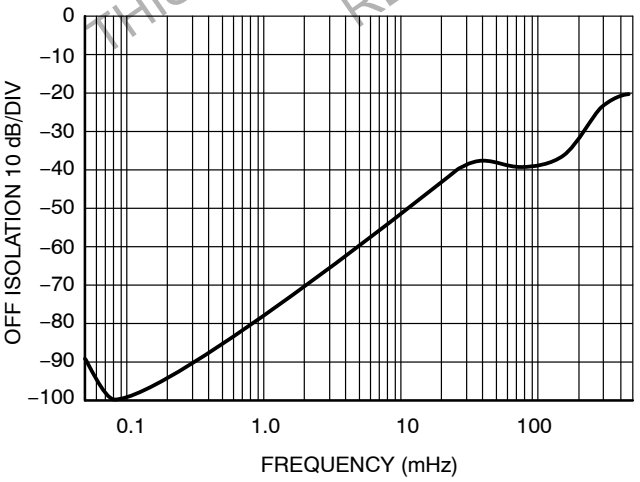

Figure 12. Off Isolation

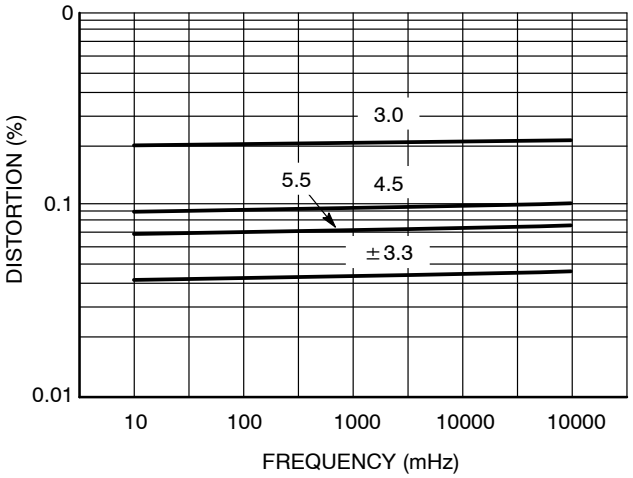

Figure 13. Total Harmonic Distortion

DISCONTINUED
THIS DEVICE IS NOT RECOMMENDED FOR NEW DESIGN
PLEASE CONTACT YOUR onsemi
REPRESENTATIVE FOR INFORMATION

Downloaded from Arrow.com.

TYPICAL CHARACTERISTICS

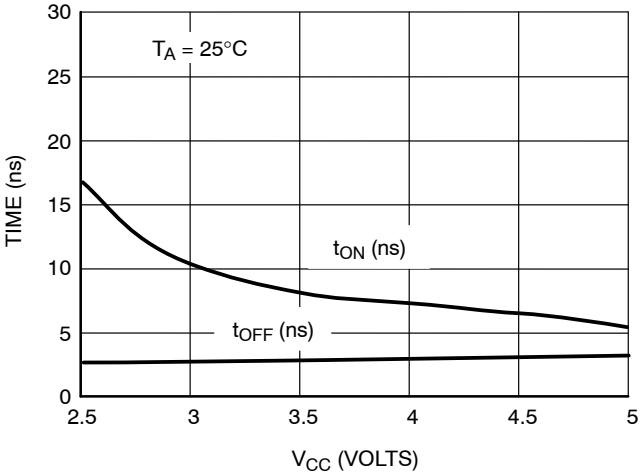

Figure 14. t_{ON} and t_{OFF} versus V_{CC}

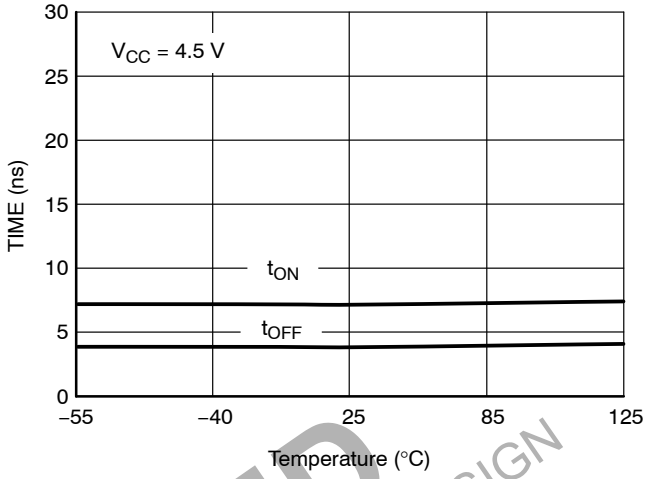

Figure 15. t_{ON} and t_{OFF} versus Temp

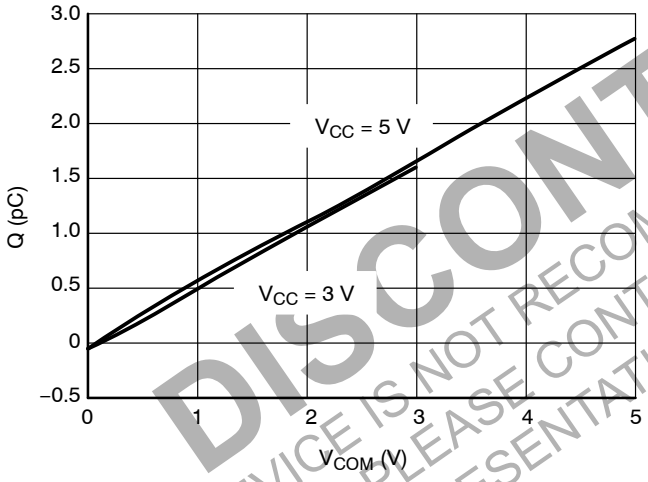

Figure 16. Charge Injection versus COM Voltage

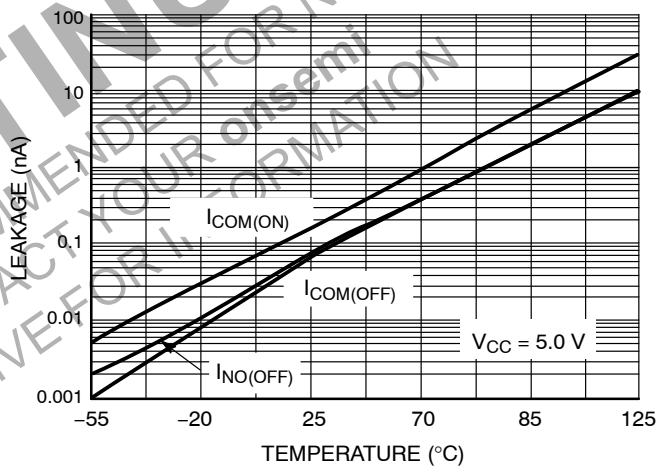

Figure 17. Switch Leakage versus Temperature

DISCONTINUED
THIS DEVICE IS NOT RECOMMENDED FOR NEW DESIGN
PLEASE CONTACT YOUR onsemi
REPRESENTATIVE FOR INFORMATION

Downloaded from Arrow.com.

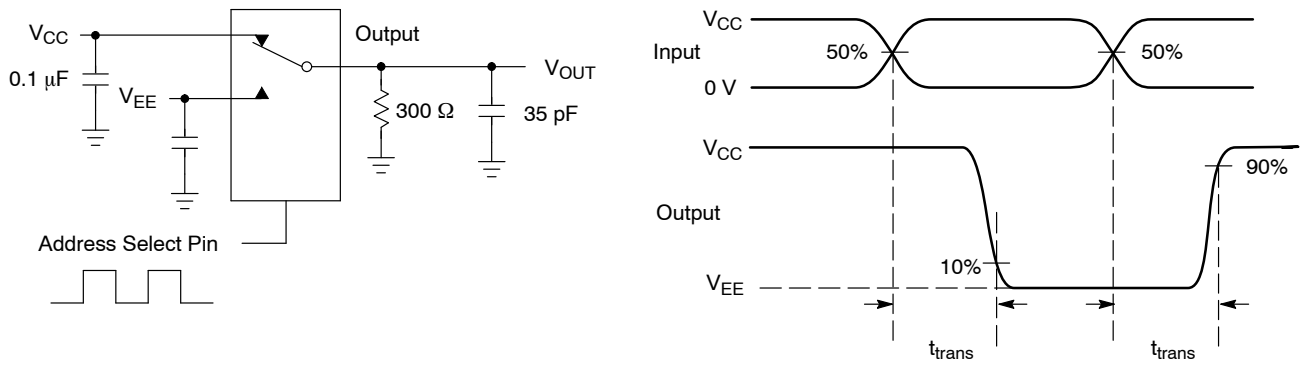

Figure 18. Channel Selection Propagation Delay

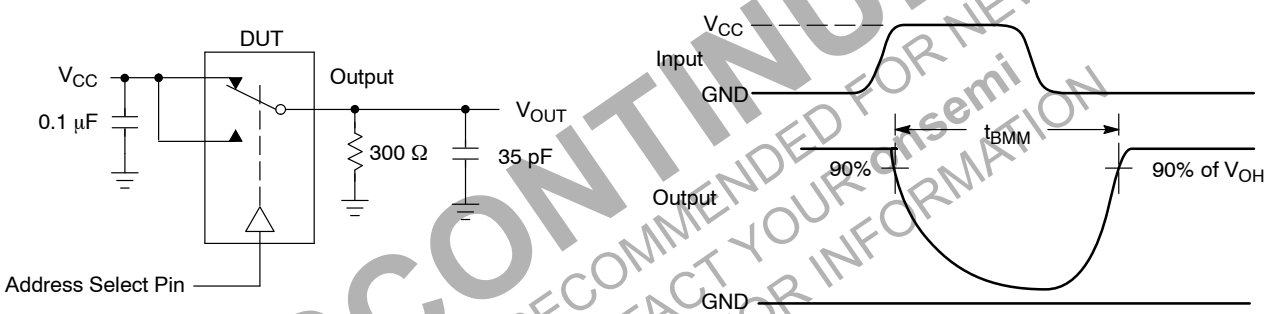

Figure 19. t_{BBM} (Time Break−Before−Make)

DISCONTINUED
THIS DEVICE IS NOT RECOMMENDED FOR NEW DESIGN
PLEASE CONTACT YOUR onsemi
REPRESENTATIVE FOR INFORMATION

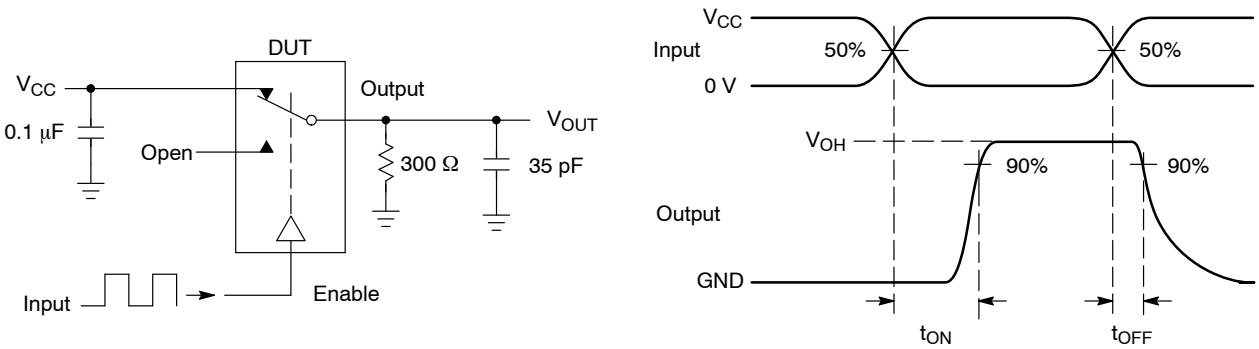

Figure 20. t_{ON}/t_{OFF}

Downloaded from Arrow.com.

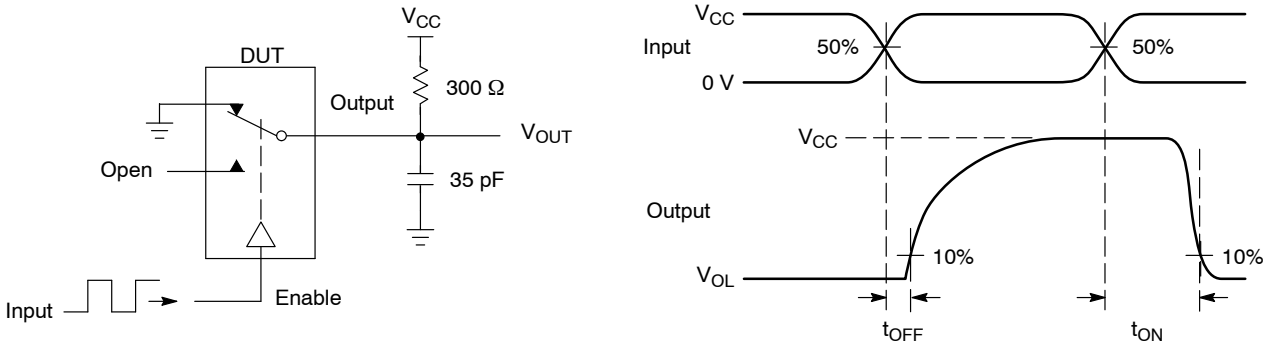

Figure 21. t_{ON}/t_{OFF}

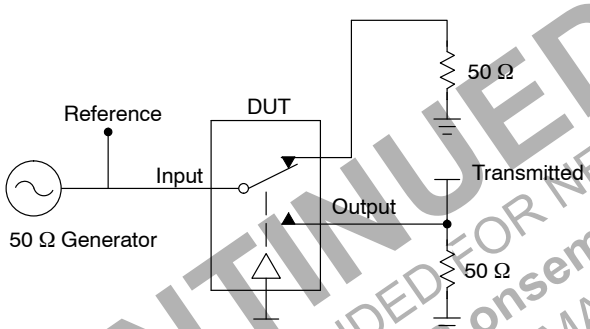

Channel switch Address and Inhibit/s test socket is normalized. Off isolation is measured across an off channel. On loss is the bandwidth of an On switch. V_{ISO}, Bandwidth and V_{ONL} are independent of the input signal direction.

V_{ISO} = Off Channel Isolation = 20 Log $\left(\frac{V_{OUT}}{V_{IN}}\right)$ for V_{IN} at 100 kHz

V_{ONL} = On Channel Loss = 20 Log $\left(\frac{V_{OUT}}{V_{IN}}\right)$ for V_{IN} at 100 kHz to 50 MHz

Bandwidth (BW) = the frequency 3 dB below V_{ONL}

Figure 22. Off Channel Isolation/On Channel Loss (BW)/Crosstalk (On Channel to Off Channel)/V_{ONL}

DISCONTINUED
THIS DEVICE IS NOT RECOMMENDED FOR NEW DESIGN
PLEASE CONTACT YOUR onsemi
REPRESENTATIVE FOR INFORMATION

Downloaded from Arrow.com.

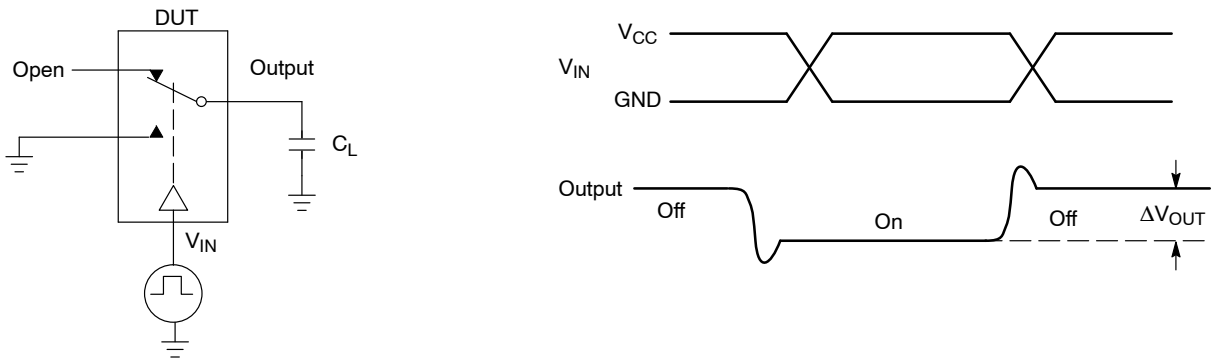

Figure 23. Charge Injection: (Q)

TYPICAL OPERATION

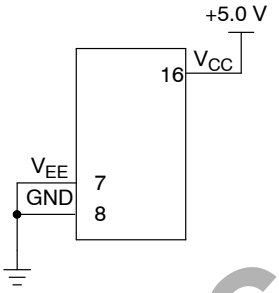

Figure 24. 5.0 Volts Single Supply
V_{CC} = 5.0 V, V_{EE} = 0

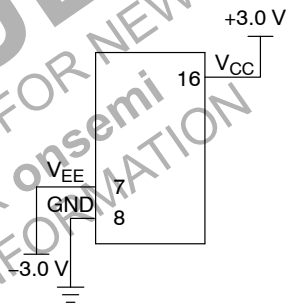

Figure 25. Dual Supply
V_{CC} = 3.0 V, V_{EE} = −3.0 V

DISCONTINUED
THIS DEVICE IS NOT RECOMMENDED FOR NEW DESIGN
PLEASE CONTACT YOUR onsemi
REPRESENTATIVE FOR INFORMATION

ORDERING INFORMATION

Device	Package	Shipping†
NLAST4051DTR2G	TSSOP−16 (Pb−Free)	2500 / Tape & Reel
NLVAST4051DTR2G*	TSSOP−16 (Pb−Free)	2500 / Tape & Reel

†For information on tape and reel specifications, including part orientation and tape sizes, please refer to our Tape and Reel Packaging Specifications Brochure, BRD8011/D.

*NLV Prefix for Automotive and Other Applications Requiring Unique Site and Control Change Requirements; AEC−Q100 Qualified and PPAP Capable.

Downloaded from Arrow.com.

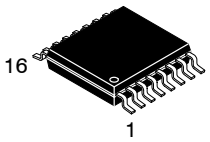

SCALE 2:1

TSSOP−16 WB
CASE 948F
ISSUE B

DATE 19 OCT 2006

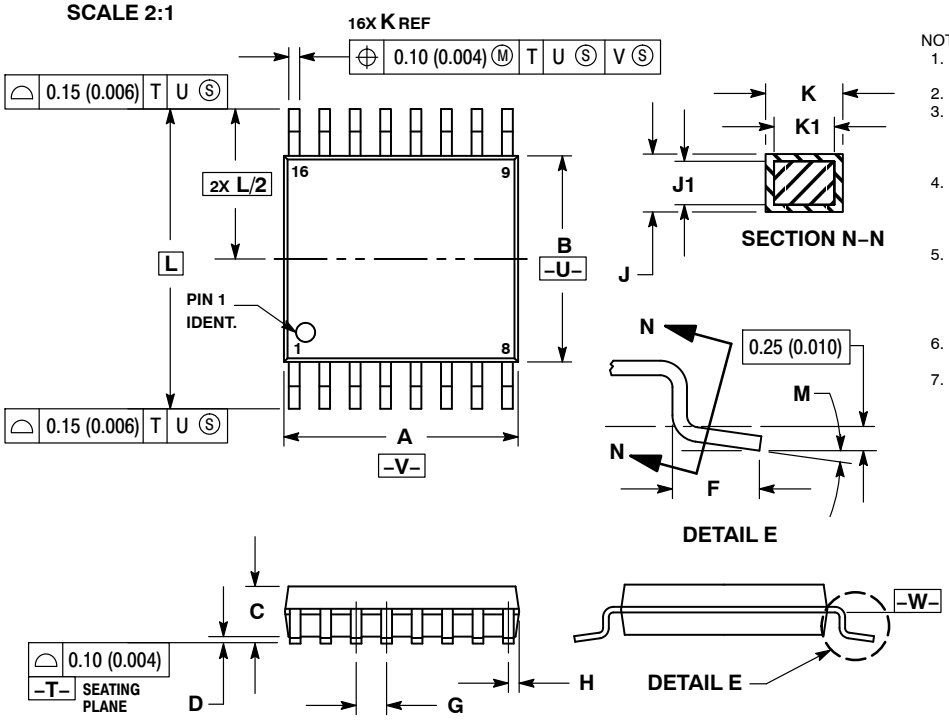

NOTES:
1. DIMENSIONING AND TOLERANCING PER ANSI Y14.5M, 1982.
2. CONTROLLING DIMENSION: MILLIMETER.
3. DIMENSION A DOES NOT INCLUDE MOLD FLASH. PROTRUSIONS OR GATE BURRS. MOLD FLASH OR GATE BURRS SHALL NOT EXCEED 0.15 (0.006) PER SIDE.
4. DIMENSION B DOES NOT INCLUDE INTERLEAD FLASH OR PROTRUSION. INTERLEAD FLASH OR PROTRUSION SHALL NOT EXCEED 0.25 (0.010) PER SIDE.
5. DIMENSION K DOES NOT INCLUDE DAMBAR PROTRUSION. ALLOWABLE DAMBAR PROTRUSION SHALL BE 0.08 (0.003) TOTAL IN EXCESS OF THE K DIMENSION AT MAXIMUM MATERIAL CONDITION.
6. TERMINAL NUMBERS ARE SHOWN FOR REFERENCE ONLY.
7. DIMENSION A AND B ARE TO BE DETERMINED AT DATUM PLANE −W−.

	MILLIMETERS		INCHES	
DIM	MIN	MAX	MIN	MAX
A	4.90	5.10	0.193	0.200
B	4.30	4.50	0.169	0.177
C	−−−	1.20	−−−	0.047
D	0.05	0.15	0.002	0.006
F	0.50	0.75	0.020	0.030
G	0.65 BSC		0.026 BSC	
H	0.18	0.28	0.007	0.011
J	0.09	0.20	0.004	0.008
J1	0.09	0.16	0.004	0.006
K	0.19	0.30	0.007	0.012
K1	0.19	0.25	0.007	0.010
L	6.40 BSC		0.252 BSC	
M	0 °	8 °	0 °	8 °

RECOMMENDED SOLDERING FOOTPRINT*

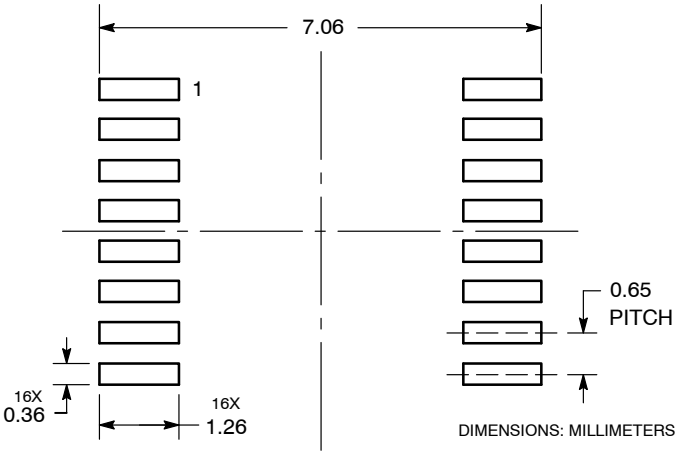

*For additional information on our Pb−Free strategy and soldering details, please download the **onsemi** Soldering and Mounting Techniques Reference Manual, SOLDERRM/D.

GENERIC MARKING DIAGRAM*

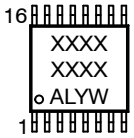

XXXX	= Specific Device Code
A	= Assembly Location
L	= Wafer Lot
Y	= Year
W	= Work Week
G or ▪	= Pb−Free Package

*This information is generic. Please refer to device data sheet for actual part marking. Pb−Free indicator, “G” or microdot “ ▪”, may or may not be present. Some products may not follow the Generic Marking.

DOCUMENT NUMBER:	98ASH70247A	Electronic versions are uncontrolled except when accessed directly from the Document Repository. Printed versions are uncontrolled except when stamped “CONTROLLED COPY” in red.
DESCRIPTION:	TSSOP−16	PAGE 1 OF 1

onsemi and onsemi are trademarks of Semiconductor Components Industries, LLC dba **onsemi** or its subsidiaries in the United States and/or other countries. **onsemi** reserves the right to make changes without further notice to any products herein. **onsemi** makes no warranty, representation or guarantee regarding the suitability of its products for any particular purpose, nor does **onsemi** assume any liability arising out of the application or use of any product or circuit, and specifically disclaims any and all liability, including without limitation special, consequential or incidental damages. **onsemi** does not convey any license under its patent rights nor the rights of others.

Downloaded from Arrow.com.

onsemi, onsemi, and other names, marks, and brands are registered and/or common law trademarks of Semiconductor Components Industries, LLC dba "**onsemi**" or its affiliates and/or subsidiaries in the United States and/or other countries. **onsemi** owns the rights to a number of patents, trademarks, copyrights, trade secrets, and other intellectual property. A listing of **onsemi**'s product/patent coverage may be accessed at www.onsemi.com/site/pdf/Patent−Marking.pdf. **onsemi** reserves the right to make changes at any time to any products or information herein, without notice. The information herein is provided "as−is" and **onsemi** makes no warranty, representation or guarantee regarding the accuracy of the information, product features, availability, functionality, or suitability of its products for any particular purpose, nor does **onsemi** assume any liability arising out of the application or use of any product or circuit, and specifically disclaims any and all liability, including without limitation special, consequential or incidental damages. Buyer is responsible for its products and applications using **onsemi** products, including compliance with all laws, regulations and safety requirements or standards, regardless of any support or applications information provided by **onsemi**. "Typical" parameters which may be provided in **onsemi** data sheets and/or specifications can and do vary in different applications and actual performance may vary over time. All operating parameters, including "Typicals" must be validated for each customer application by customer's technical experts. **onsemi** does not convey any license under any of its intellectual property rights nor the rights of others. **onsemi** products are not designed, intended, or authorized for use as a critical component in life support systems or any FDA Class 3 medical devices or medical devices with a same or similar classification in a foreign jurisdiction or any devices intended for implantation in the human body. Should Buyer purchase or use **onsemi** products for any such unintended or unauthorized application, Buyer shall indemnify and hold **onsemi** and its officers, employees, subsidiaries, affiliates, and distributors harmless against all claims, costs, damages, and expenses, and reasonable attorney fees arising out of, directly or indirectly, any claim of personal injury or death associated with such unintended or unauthorized use, even if such claim alleges that **onsemi** was negligent regarding the design or manufacture of the part. **onsemi** is an Equal Opportunity/Affirmative Action Employer. This literature is subject to all applicable copyright laws and is not for resale in any manner.

ADDITIONAL INFORMATION

TECHNICAL PUBLICATIONS:
Technical Library: www.onsemi.com/design/resources/technical−documentation
onsemi Website: www.onsemi.com

ONLINE SUPPORT: www.onsemi.com/support
For additional information, please contact your local Sales Representative at www.onsemi.com/support/sales

Downloaded from Arrow.com.