ANGLE 1

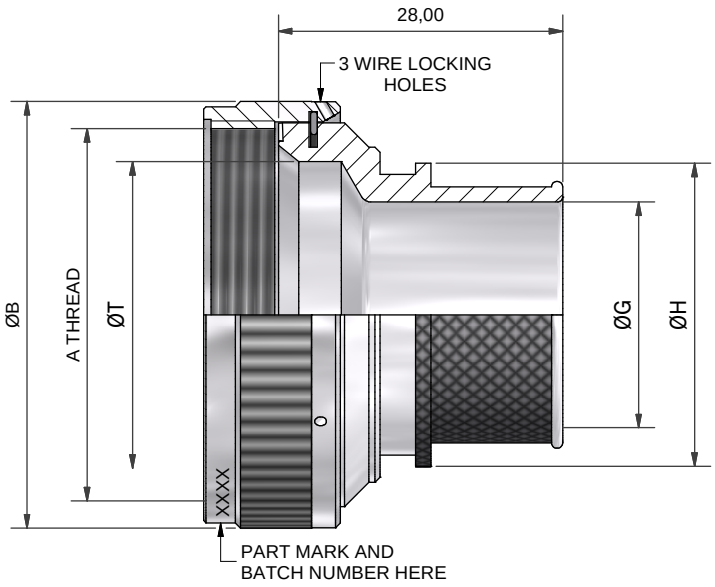

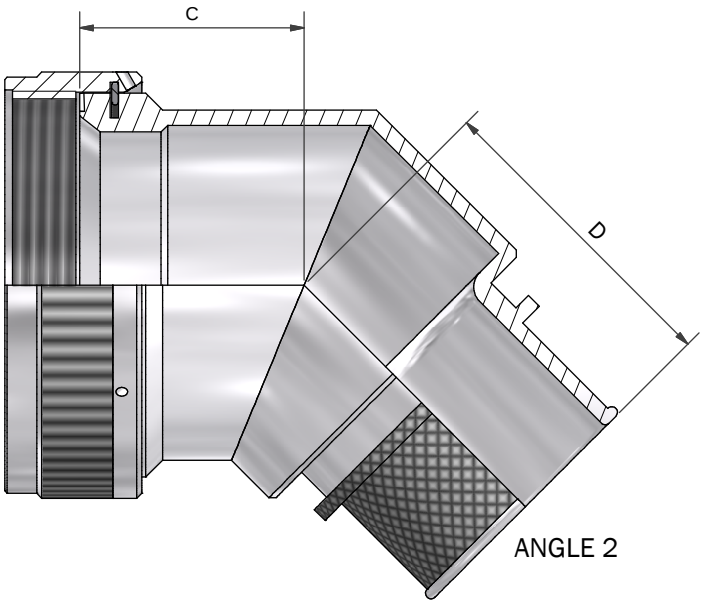

ANGLE 2

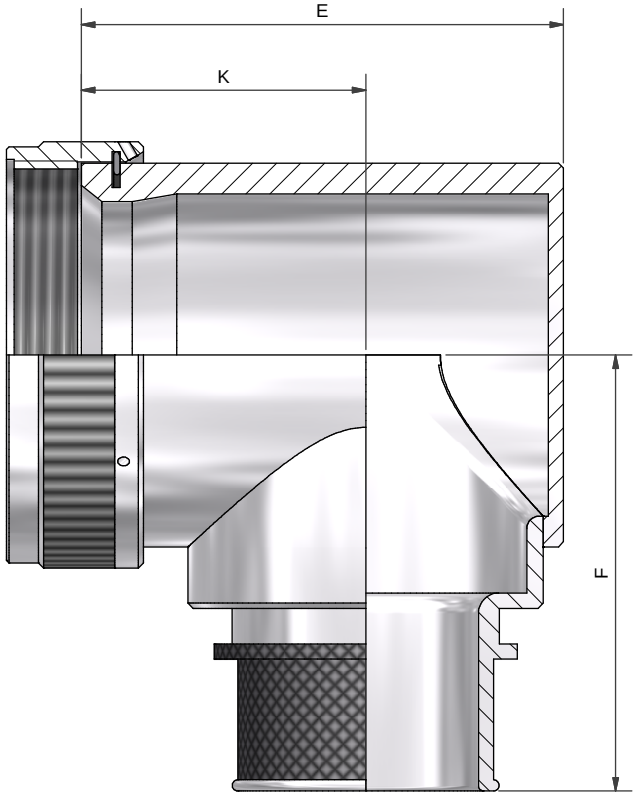

ANGLE 3

DRAWN	K.WINCZURA	DATE 02/10/2013	3RD ANGLE PROJECTION NOT TO SCALE	POLAMCO LTD www.polamco.com	WESTON LOCK LOWER BRISTOL ROAD BATH BA2 1EP
SALES APPR		02/10/2013			
DESIGN APPR	K.SHEPPARD	08/10/2013	UNLESS OTHERWISE SPECIFIED ALL DIMENSIONS IN MILLIMETRES GENERAL TOL LINEAR +/-0,25MM ANGULAR +/- 1°	ASSY USED ON: MIL-DTL-81703 SERIES III	
PROD APPR				TITLE: BANDING BACKSHELL	
QUAL APPR			MATERIAL SEE PART NUMBER BREAKDOWN		
ISSUE A	DCR			PART NUMBER: BTAS SERIES	DRAWING NO: P29307 SHT 1
NCAGE CODE U5792	WEIGHT		FINISH SEE PART NUMBER BREAKDOWN		

THIS DRAWING IS COPYRIGHT AND THE PROPERTY OF POLAMCO LTD IT MUST NOT BE COPIED, USED FOR MANUFACTURE OR OTHERWISE DISCLOSED WITHOUT PRIOR WRITTEN CONSENT OF THE COMPANY.

Downloaded from Arrow.com.

TABLE 1

SHELL SIZE	A THREAD	ØB MAX	ØT MIN	C ±0,5	D MAX	E MAX	F MAX	K ±0,5
03	9/16-24UNEF	17,0	6,6	16,8	26,6	26,6	29,4	17,6
07	3/4-20UNEF	21,7	12,8	17,3	27,3	29,3	32,0	18,7
12	7/8-20UNEF	24,9	14,8	18,1	28,2	30,7	33,6	19,0
19	1-20UNEF	28,2	17,9	19,0	29,0	34,2	36,9	21,0
27	1 1/16-18UNEF	30,9	19,9	19,2	29,3	37,3	36,9	23,5
37	1 3/16-18UNEF	34,1	23,1	20,1	30,1	42,2	38,5	27,0
61	1 1/2-18UNEF	42,0	30,1	22.1	31,4	48,0	52,1	28,0

TABLE 2

ENTRY SIZE	ØG MIN	ØH MAX
03	4,7	13,9
04	6,3	13,9
05	7,9	15,5
06	9,5	17,2
07	11,1	18,7
08	12,7	20,3
09	14,2	21,9
10	15,8	23,5
11	17,4	25,1
12	19,0	26,7
13	20,6	28,3
14	22,2	29,9
15	23,8	31,5
16	25,4	33,1
17	27,0	34,7
18	28,6	36,3
19	30,2	37,9
20	31,8	39,5
21	33,3	41,1
22	35,0	42,7
23	36,5	44,3
24	38,1	45,9

TABLE 3

CODE	FINISH
C	ELECTROLESS NICKEL
B	CADMIUM OLIVE DRAB OVER ELECTROLESS NICKEL
ZB	ZINC COBALT OLIVE DRAB OVER ELECTROLESS NICKEL
ZN	ZINC NICKEL BLACK PASSIVATE OVER ELECTROLESS NICKEL

LIST NOT EXHAUSTIVE, SEE PLATING TABLE FOR OTHER OPTIONS

BTAS1-61-14-1-C

SERIES
CONNECTOR INTERFACE
ANGLE
SHELL SIZE (TABLE 1)
ENTRY SIZE (TABLE 2)
MATERIAL
ALUMINIUM ALLOY
FINISH (TABLE 3)

DRAWN	K.WINCZURA	DATE 02/10/2013
SALES APPR		02/10/2013
DESIGN APPR	K.SHEPPARD	08/10/2013
PROD APPR		
QUAL APPR		
ISSUE A	DCR	
NCAGE CODE U5792	WEIGHT	

3RD ANGLE PROJECTION
NOT TO SCALE

UNLESS OTHERWISE SPECIFIED
ALL DIMENSIONS IN MILLIMETRES
GENERAL TOL
LINEAR +/-0,25MM
ANGULAR +/- 1°

MATERIAL
SEE PART NUMBER BREAKDOWN

FINISH
SEE PART NUMBER BREAKDOWN

POLAMCO LTD
www.polamco.com
WESTON LOCK
LOWER BRISTOL ROAD
BATH BA2 1EP

ASSY USED ON: MIL-DTL-81703 SERIES III

TITLE:
BANDING BACKSHELL

PART NUMBER:
BTAS SERIES

THIS DRAWING IS COPYRIGHT AND THE PROPERTY OF POLAMCO LTD
IT MUST NOT BE COPIED, USED FOR MANUFACTURE OR OTHERWISE DISCLOSED WITHOUT PRIOR WRITTEN CONSENT OF THE COMPANY.

DRAWING NO: P29307
SHT 2

Downloaded from Arrow.com.