Alle Rechte vorbehalten/ *All rights reserved*

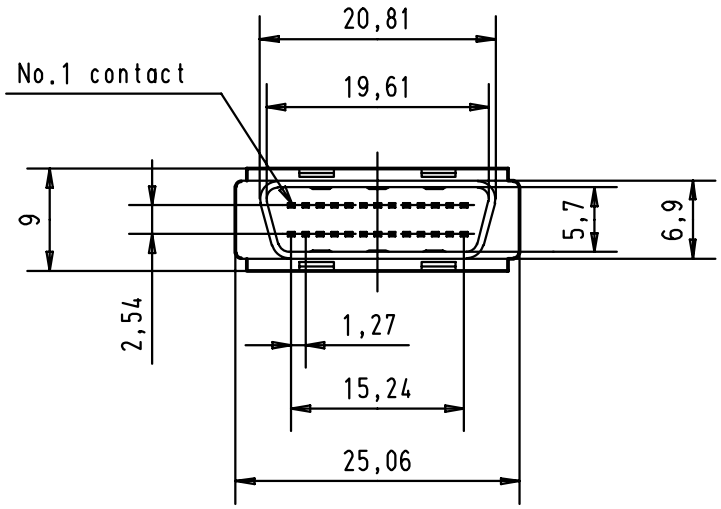

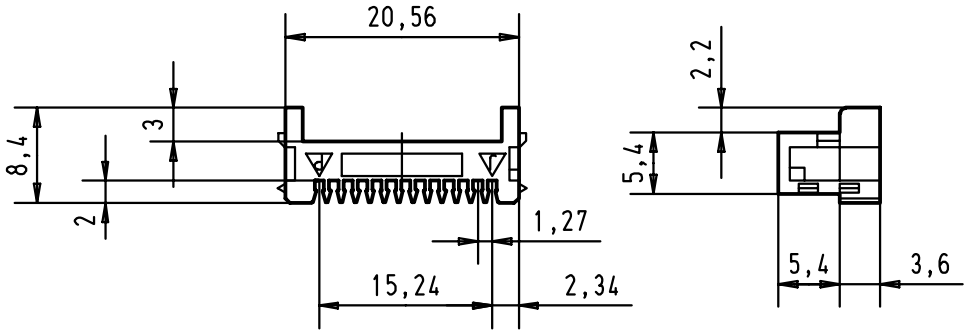

COVER 1

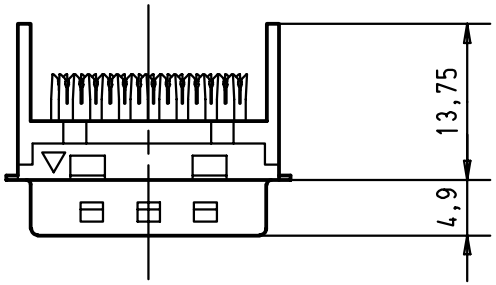

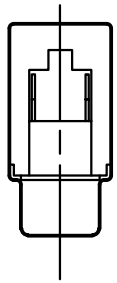

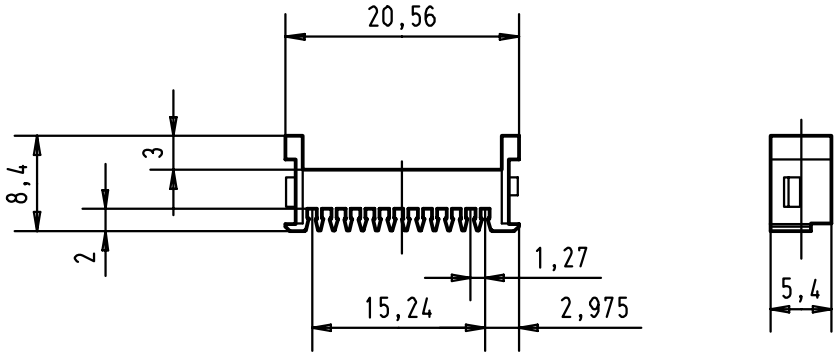

COVER 2

						Dat.	Name		har.mik® I/O pin/socket	Maßstab/ Scale
60 03 026 5220	0,80 to 0,88				Detail.	30-AUG-00	Alspace	All Dim. in mm Orig. Size DIN A 4	IDC male 26 poles connector	1,5:1
60 03 026 5210	0,65 to 0,80				Insp.					
60 03 026 5200	0,50 to 0,65				Stand.					
Part-No.	*cable insulator ø*	27941	30-AUG-00	Alspace	HARTING EURL F-95972 Paris				TB 60 03 026 52X0	Blatt/*Page* 1/1
		Mod.	Dat.	Name					Sub.	

Downloaded from Arrow.com.