**MICRO SWITCH**
a Honeywell Division
FED. MFG. CODE 91929

# SWITCH-ASSEMBLY

CATALOG LISTING
39HE6-R

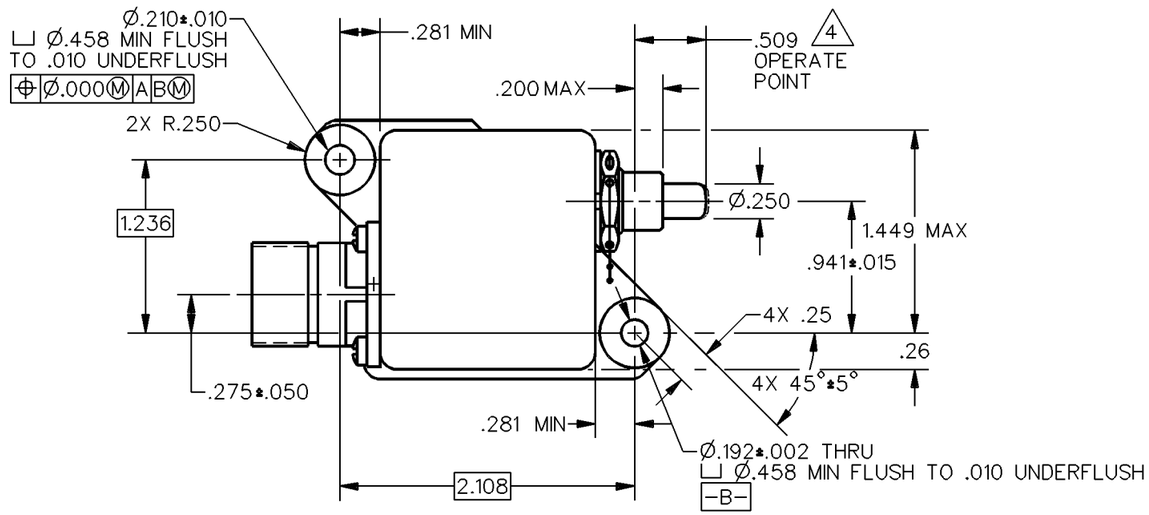


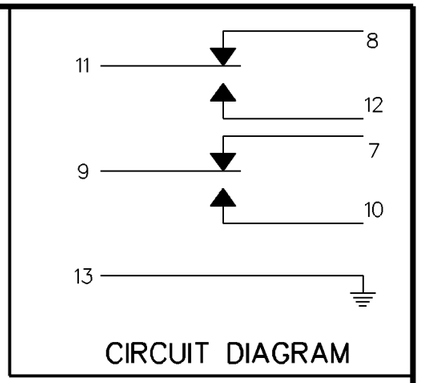


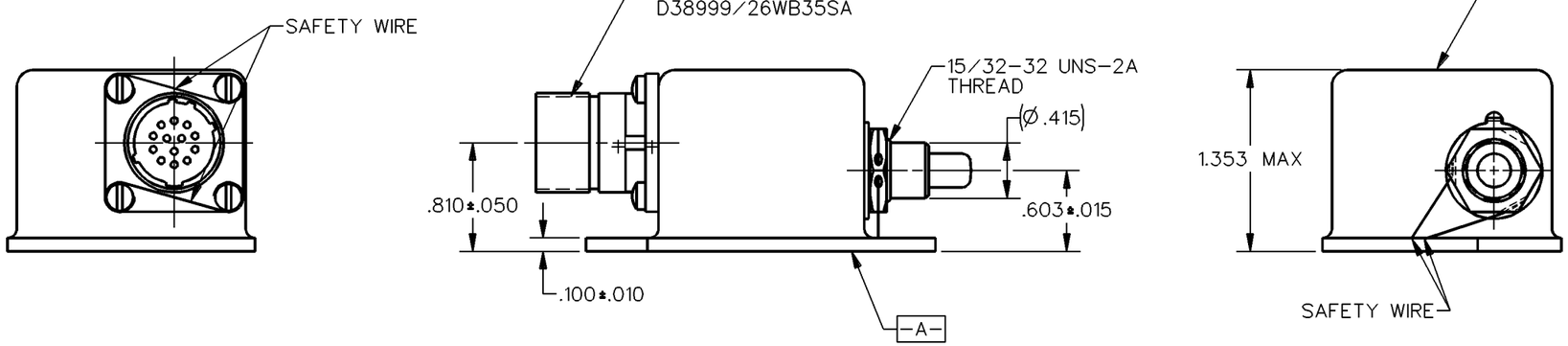


THIS DRAWING COVERS A PROPRIETARY ITEM AND IS THE PROPERTY OF MICRO SWITCH. A DIVISION OF HONEYWELL. THIS DRAWING IS NOT TO BE COPIED OR USED WITHOUT THE APPROVAL OF MICRO SWITCH

THIRD ANGLE PROJECTION

SCALE FULL

DO NOT SCALE PRINT

**CHARACTERISTICS**

| | |
|---|---|
| OPERATING FORCE | 3–6 LB |
| FULL OVERTRAVEL FORCE | 17 LB MAX |
| RELEASE FORCE | 2 LB MIN |
| DIFFERENTIAL TRAVEL | .020 MAX |
| OVERTRAVEL | .238 MIN |

**ELECTRICAL DATA**

CONTACT ARRANGEMENT
SPDT (2)

| LOAD | 28 VDC | |
|---|---|---|
| | SEA LEVEL & | 50,000 FT. |
| RES | 1 | 1 |
| IND | 0.5 | 0.5 |
| | △5 | |

**UNLESS OTHERWISE SPECIFIED TOLERANCES ARE**

| | | |
|---|---|---|
| ONE PLACE | (.0) | ±.030 |
| TWO PLACE | (.00) | ±.015 |
| THREE PLACE | (.000) | ±.005 |
| ANGLES | | ± |

WEIGHT .4 LB MAX

NOTES
1 – SWITCH TO OPERATE IN TEMPERATURES OF –65°F TO 257°F
2 – SWITCH CAVITY HERMETICALLY SEALED PER MIL-S-8805, CLASS 5
△3 CATALOG LISTING, DATE CODE, CUSTOMER PART NUMBER 99167SOCN5908718, U.S., MFR CODE 91929, REVISION NUMBER, SERIAL NUMBER, U.S., AND NATIONAL STOCK NUMBER 5930-01-360-8710 ARE SHOWN ON NAME PLATE LOCATED ON TOP OF HOUSING
△4 PRETRAVEL .005–.050 PERMISSIBLE
△5 BASIC SWITCHES HAVE GOLD BIFURCATED CONSTRUCTION

ANSI Y14.5M–1982 APPLIES

CATALOG LISTING 39HE6-R
ISSUE 6 M
REPLACES
RELEASE NO. PR–19414

REVISIONS

| | | |
|---|---|---|
| A | JOB 11517 | G R T 15 FEB 91 |
| B | CHG DRG | N W J 14 JUN 91 |
| C | PR 19414 | T S M 28 AUG 91 |
| D | CO–76998 | D H D 3 DEC 93 |
| E | CO–77240 | JWB 10 DEC 93 |

| | | |
|---|---|---|
| DRAWN | T S M | 28 AUG 91 |
| CHECK | D A W | 29 AUG 91 |
| CHECK | | |
| CHECK | | |
| | DDM/CAD | |

Downloaded from Arrow.com.