THIS DRAWING IS UNPUBLISHED. RELEASED FOR PUBLICATION -,- .
© COPYRIGHT - By - ALL RIGHTS RESERVED.

LOC	DIST
X0	DF

REVISIONS

P	LTR	DESCRIPTION	DATE	DWN	APVD
	D	REVISED PER ECO-13-014821	25OCT13	MGM	CT

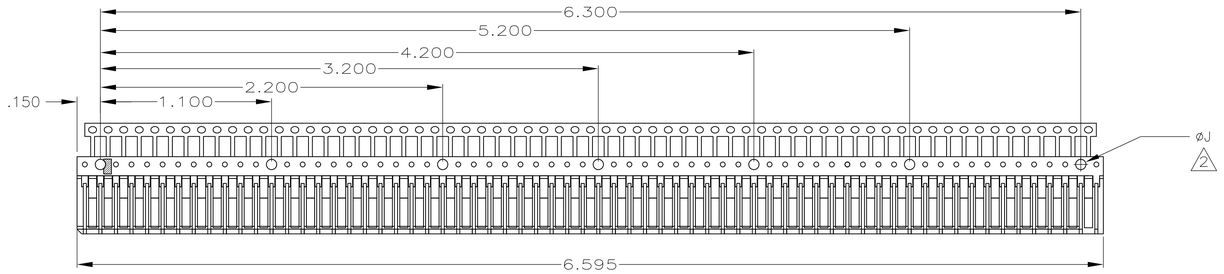

1437636-4

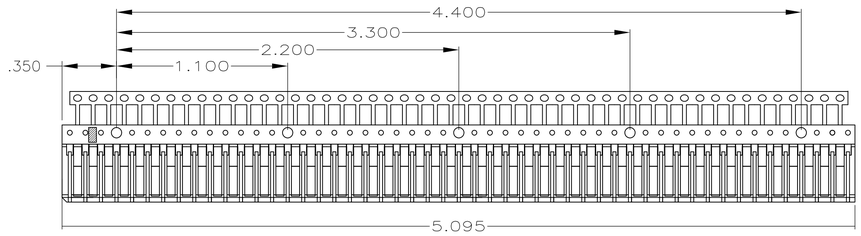

1437636-3

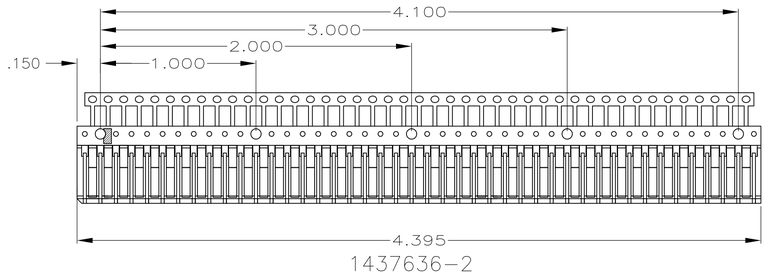

1437636-2

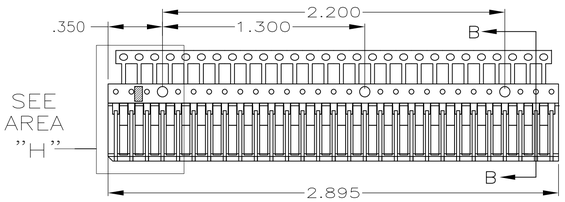

1437636-1

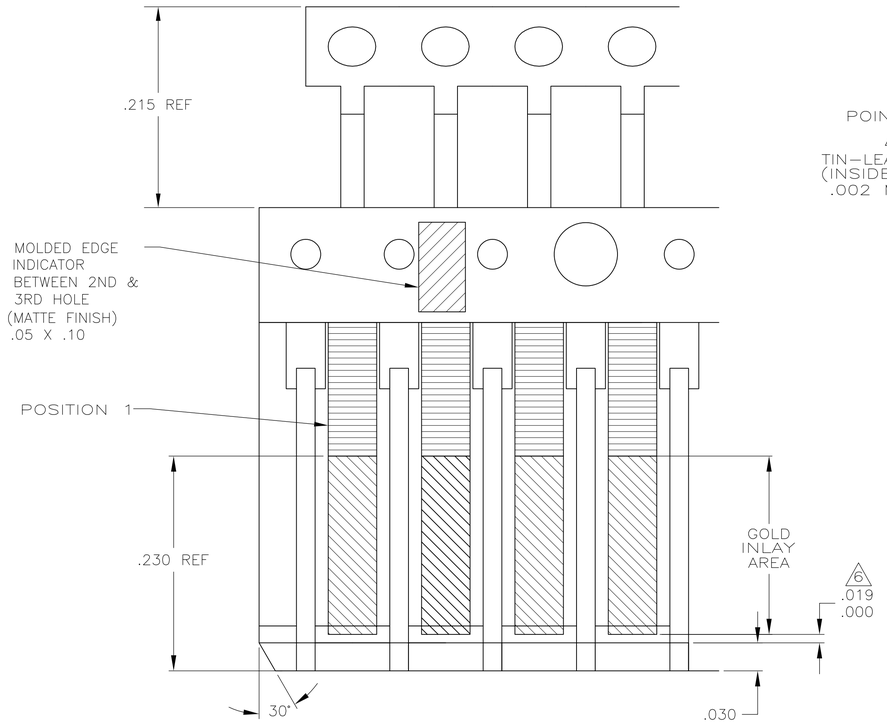

AREA "H"
SCALE 12:1

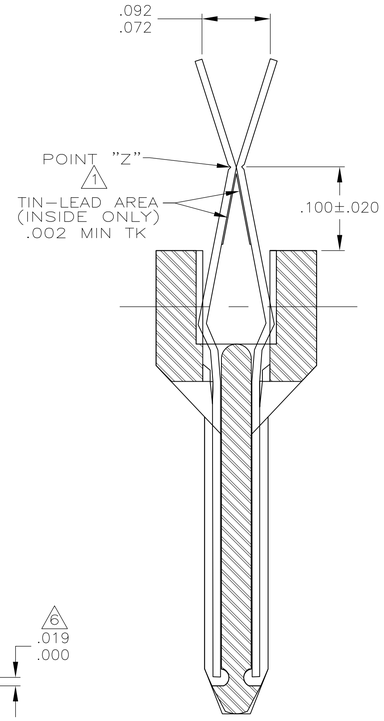

SECT B-B

SCALE 12:1

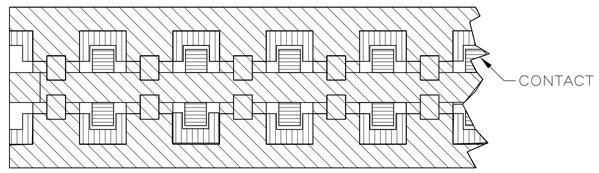

1. CONNECTORS ARE SUPPLIED WITH CARRIER STRIP ATTACHED. STRIP IS NOTCHED AT POINT "Z" FOR BREAKOFF AFTER CONNECTOR SOLDERING.
2. EXISTING .031 HOLE IS DRILLED TO DIA "J".

4. THE CARRIER STRIP SHALL BE CUTOFF SO THAT NEITHER END EXTENDS BEYOND THE END OF THE CONNECTOR BODY.
5. THE MOLDED END IDENTIFIER MUST BE LOCATED ON THE POSITION 1 END AFTER ASSEMBLY.
6. THE DIMENSION SHOWN CONTROLS THE SEATING DEPTH OF THE CONTACTS AFTER ASSEMBLY AND THE CARRIER STRIP CUTOFF.
7. INSULATOR MATERIAL: GLASS FILLED POLYPHENYLENE SULFIDE RESIN (RYTON R-4) RATED 94VO.
8. CONTACT MATERIAL: CUPRO-NICKEL ALLOY BASE MATERIAL WITH GOLD/SILVER ALLOY INLAY OF 30uIN OVER 50 TO 150uIN OF NICKEL AS SHOWN. TIN-LEAD MIN .002 THICK IN THE PC BOARD AREA AS SHOWN.

ALTERNATE P/N	CUSTOMER P/N	DIA "J"	# OF POSITIONS	PART NUMBER
49-4400-004	634-2635-002	.067 +.005 -.001 7 PLCS	130 (2 X 65)	1437636-4
49-4400-003	634-4983-002	.067 +.005 -.001 5 PLCS	100 (2 X 50)	1437636-3
49-4400-002	634-2635-001	.067 +.005 -.001 5 PLCS	86 (2 X 43)	1437636-2
49-4400-001	634-4983-001	.067 +.005 -.001 3 PLCS	56 (2 X 28)	1437636-1

THIS DRAWING IS A CONTROLLED DOCUMENT.

DIMENSIONS: INCHES

TOLERANCES UNLESS OTHERWISE SPECIFIED:
0 PLC ± -
1 PLC ± -
2 PLC ± -
3 PLC ± .005
4 PLC ± -
ANGLES ± 1°

MATERIAL: SEE NOTES
FINISH: SEE NOTES

DWN D. NALLY 10-14-05
CHK D. NALLY 10-14-05
APVD D. NALLY 10-14-05
PRODUCT SPEC —
APPLICATION SPEC —
WEIGHT —

TE Connectivity

NAME ASSEMBLY, FINGERPAC
— —

SIZE A1 | CAGE CODE 00779 | DRAWING NO C-1437636 | RESTRICTED TO —

CUSTOMER DRAWING | SCALE 4:1 | SHEET 1 OF 1 | REV D

4805 (3/11)

Downloaded from Arrow.com.