TRACO POWER

AC/DC Medical Power Supply

TPP 450A Series, 450 Watt

- **High power density 3" x 5" open frame medical power supply**
- **450 Watt with forced air cooling, up to 320 Watt convection cooled without derating up to 50°C**
- **Medical certification to IEC/EN/ES 60601-1 edition 3.2 for 2 x MOPP**
- **EMC compliance to IEC/EN 60601-1-2 4th edition**
- **Risk management process according to ISO 14971 incl. risk management file**
- **Acceptance criteria for electronic assemblies acc. to IPC-A-610 class 3**
- **Isolation (4000 VAC) and leakage current (<100 µA) rated for BF applications**
- **Standard features: 5 V standby output 12 V fan output, Remote On/Off, Power Good Signal, variable fan speed**
- **Operating up to 5000 m altitude**
- **5-year product warranty**

2MOPP

Scheme

ES 60601-1 IEC 60601-1
UL 62368-1 IEC 62368-1

The TPP 450A Series of 450 Watt AC/DC power supplies feature a reinforced double I/O isolation system according to latest medical safety standards (60601-1 edition 3.2, 2 x MOPP). The earth leakage current is below 100 µA what makes the units suitable for BF (body floating) applications. The excellent efficiency of up to 94% allows a high power density for the standard 3" x 5" packaging format.
Natural convection cooled power up to 320 W at +50°C and 150W at +85°C. Thus you can power your medical device in a quiet and hygienic way as you don't need to run a fan to cool down the power supply. High reliability is provided by use of industrial quality grade components and an excellent thermal management. It makes the products an ideal solution for medical devices and for demanding safety and space critical applications.

Models

Order Code	Output Power max.	Output Voltage nom. (adjustable)	Output Current max. (Forced air cooling)	Output Current max. (Natural convection)	Efficiency typ.
TPP 450-112A-M	450 W	12 VDC (11.0 - 13.0 VDC)	37'500 mA	20'800 mA	91 %
TPP 450-115A-M		15 VDC (13.8 - 16.2 VDC)	30'000 mA	16'600 mA	92 %
TPP 450-124A-M		24 VDC (22.1 - 25.9 VDC)	18'750 mA	13'300 mA	93 %
TPP 450-128A-M		28 VDC (25.8 - 30.2 VDC)	16'100 mA	11'400 mA	93 %
TPP 450-136A-M		36 VDC (33.1 - 38.9 VDC)	12'500 mA	8'900 mA	93 %
TPP 450-148A-M		48 VDC (44.2 - 51.8 VDC)	9'400 mA	6'650 mA	94 %
TPP 450-153A-M		53 VDC (48.8 - 57.2 VDC)	8'550 mA	6'050 mA	94 %

Options

TPP 450-AUX1	- Optional Cable for auxiliary connection (2 x 4 pin): www.tracopower.com/overview/tpp450-aux1
TPP 450-AUX2	- Optional Cable for auxiliary connection (2 x 5 pin): www.tracopower.com/overview/tpp450-aux2

Downloaded from Arrow.com.

Input Specifications

Input Voltage	- AC Range	Operational Range:	85 - 264 VAC (Full Range)
		Rated Range:	100 - 240 VAC (Full Range)
	- DC Range	Operational Range:	120 - 370 VDC (Designed for, no certification)
		Polarity:	+DC: L / –DC: N
Input Frequency		Operational Range:	47 - 440 Hz
		Certified:	50/60 Hz
Power Consumption	- No load & Vin = 230 VAC		650 mW max.
	- No load & Vin = 115 VAC		900 mW max.
Input Current	- Full load & Vin = 230 VAC		2'400 mA max.
	- Full load & Vin = 115 VAC		5'800 mA max.
Input Inrush Current	- At 230 VAC		100 A max.
	- At 115 VAC		55 A max.
Power Factor	- At 230 VAC		0.95 min. (Active Power Factor Correction)
	- At 115 VAC		0.95 min. (Active Power Factor Correction)
Input Protection			T 6.3 A / 250 VAC (Internal Fuse in L & N)
Recommended Input Fuse			(The need of an external fuse has to be assessed in the final application.)

Output Specifications

Output Voltage Adjustment			±8% (By trim potentiometer) Output power must not exceed rated power!
Voltage Set Accuracy			±1% max.
Regulation	- Input Variation (Vmin - Vmax)		0.2% max.
	- Load Variation (0 - 100%)		0.5% max.
Ripple and Noise (20 MHz Bandwidth)		12 VDC model:	250 mVp-p typ. (w/ 1 µF X7R)
		15 VDC model:	300 mVp-p typ. (w/ 1 µF X7R)
		24 VDC model:	240 mVp-p typ. (w/ 1 µF X7R)
		28 VDC model:	280 mVp-p typ. (w/ 1 µF X7R)
		36 VDC model:	360 mVp-p typ. (w/ 1 µF X7R)
		48 VDC model:	480 mVp-p typ. (w/ 1 µF X7R)
		53 VDC model:	530 mVp-p typ. (w/ 0.1 µF X7R)
Capacitive Load		12 VDC model:	31'250 µF max.
		15 VDC model:	20'000 µF max.
		24 VDC model:	7'820 µF max.
		28 VDC model:	5'750 µF max.
		36 VDC model:	3'500 µF max.
		48 VDC model:	1'960 µF max.
		53 VDC model:	1'600 µF max.
Minimum Load			Not required
Temperature Coefficient			±0.02 %/K max.
Hold-up Time	- At 230 VAC		12 ms min.
	- At 115 VAC		12 ms min.
Start-up Time	- At 230 VAC		2'000 ms max.
	- At 115 VAC		2'000 ms max.
Short Circuit Protection			Continuous, Automatic recovery (Level 1, nom.) Latch (Level 2, instantaneous high current)
Output Current Limitation			115 - 155% of Iout max.
Overvoltage Protection			110 - 135% of Vout nom. (Latch off, Standby Power Source always present)
Transient Response	- Response Deviation		3% max. (50% to 75% Load Step)
	- Response Time		600 µs typ. (50% to 75% Load Step)

All specifications valid at 230 VAC, resistive full load and +25°C after warm-up time, unless otherwise stated.

Downloaded from Arrow.com.

Safety Specifications

Standards	- IT / Multimedia Equipment	EN 62368-1 IEC 62368-1 UL 62368-1
	- Medical Equipment	EN 60601-1 IEC 60601-1 ANSI/AAMI ES 60601-1 2 x MOPP (Means Of Patient Protection)
	- Certification Documents	www.tracopower.com/tpp450a-safety-cert/
Protection Class		Class I (Prepared): Connection to PE
	See application note:	www.tracopower.com/info/protection-class.pdf (Any one of the four mounting holes can be considered as PE connection for class I application)
Energy Source	- Output, acc. to 62368-1	ES1
Power Source	- Output, acc. to 62368-1	PS3
Pollution Degree		PD 2
Over Voltage Category		OVC II

EMC Specifications

EMI (Emissions)		EN 60601-1-2 edition 4 (Medical Devices)
	- Conducted Emissions	EN 55011 class A (internal filter) EN 55011 class B (internal filter) EN 55032 class A (internal filter) EN 55032 class B (internal filter) FCC 47 Part 15 class A (internal filter) FCC 47 Part 15 class B (internal filter) FCC 47 Part 18 class A (internal filter) FCC 47 Part 18 class B (internal filter)
	- Radiated Emissions	EN 55011 class A (internal filter) EN 55032 class A (internal filter) FCC 47 Part 15 class A (internal filter) FCC 47 Part 18 class A (internal filter)
	- Harmonic Current Emissions	EN 61000-3-2, class A EN 61000-3-2, class D
	- Voltage Fluctuations & Flicker	EN 61000-3-3 (For optimal EMI performance the power supply should be mounted to a grounded aluminium plate (480 x 248 x 12 mm) with electrical contact to the four PCB mounting holes. To comply with safety standards, this plate must be grounded.)

All specifications valid at 230 VAC, resistive full load and +25°C after warm-up time, unless otherwise stated.

Downloaded from Arrow.com.

EMS (Immunity)			EN 60601-1-2 edition 4 (Medical Devices) EN 55024 (IT Equipment) EN 55035 (Multimedia)
	- Electrostatic Discharge	Air:	EN 61000-4-2, ±15 kV, perf. criteria A
		Contact:	EN 61000-4-2, ±8 kV, perf. criteria A
	- RF Electromagnetic Field		EN 61000-4-3, 3 V/m, perf. criteria A
	- EFT (Burst) / Surge		EN 61000-4-4, ±2 kV, perf. criteria A
		L to L:	EN 61000-4-5, ±1 kV, perf. criteria A
		L to PE:	EN 61000-4-5, ±2 kV, perf. criteria A
	- Conducted RF Disturbances		EN 61000-4-6, 20 Vrms, perf. criteria A
	- PF Magnetic Field	Continuous:	EN 61000-4-8, 30 A/m, perf. criteria A
	- Voltage Dips & Interruptions	230 VAC / 50 Hz:	EN 61000-4-11 30%, 25 periods, perf. criteria A >95%, 0.5 periods, perf. criteria A >95%, 1 period, perf. criteria A >95%, 250 periods, perf. criteria B
		115 VAC / 60 Hz:	EN 61000-4-11 30%, 25 periods, perf. criteria A >95%, 0.5 periods, perf. criteria A >95%, 1 period, perf. criteria A >95%, 250 periods, perf. criteria B
EMC / Environmental	- Certification Documents		www.tracopower.com/tpp450a-emc-cert/

General Specifications

Relative Humidity			95% max. (non condensing)
Temperature Ranges	- Operating Temperature		−40°C to +85°C
	- Storage Temperature		−40°C to +85°C
Power Derating	- High Temperature		Depending on model
	- Low Input Voltage		1.33 %/V below 100 VAC
		See application note:	www.tracopower.com/tpp450a-cc/
Over Temperature Protection Switch Off	- Protection Mode		110°C to 125°C (Latch off)
	- Measurement Point	See application note:	www.tracopower.com/tpp450a-thermal/
			(Standby Power Source always present)
Cooling System	- Option 1		Forced air cooling (with external fan, 21 CFM)
	- Option 2		Natural convection (20 LFM)
Fan Power Source	- Characteristic		Variable fan speed (temperature regulated)
	- Output Voltage		12 VDC
	- Output Current		500 mA max.
Standby Power Source	- Output Voltage		5 VDC
	- Output Current		2000 mA max.
Remote Control	- Voltage Controlled Remote (passive = on)		On: 3.0 to 12 VDC or open circuit Off: 0 to 1.2 VDC or short circuit Refers to '+Remote' and '-Remote' Pin
	- Remote Pin Input Current		-0.5 to 1.0 mA (Standby power source is always present)
Altitude During Operation			5'000 m max.
Regulator Topology			LLC Converter
Switching Frequency			55 - 85 kHz (PFM)
Insulation System			Reinforced Insulation
Working Voltage (rated)			312 VAC
Isolation Test Voltage	- Input to Output, 60 s		4'000 VAC
	- Input to Case or PE, 60 s		2'500 VAC
	- Output to Case or PE, 60 s		2'500 VAC
Isolation Resistance	- Input to Output, 500 VDC		100 MΩ min.
Leakage Current (at 264 VAC)	- Touch Current		100 µA max.
Reliability	- Calculated MTBF		410'000 h (MIL-HDBK-217F, ground benign)

All specifications valid at 230 VAC, resistive full load and +25°C after warm-up time, unless otherwise stated.

Downloaded from Arrow.com.

Environment	- Vibration		IEC 60068-2-6
	- Mechanical Shock		IEC 60068-2-27
	- Flammability		EN 45545-2
			www.tracopower.com/info/en45545-declaration.pdf
Housing Type			Open Frame
Mounting Type			Chassis Mount
Connection Type			Pin Connector
Weight			462 g
Power OK Signal			Open collector output
	- Trigger Threshold	12 VDC model:	9.8 - 11 VDC
		15 VDC model:	12.3 - 13.8 VDC
		24 VDC model:	19.7 - 22.1 VDC
		28 VDC model:	23 - 25.8 VDC
		36 VDC model:	29.5 - 33.1 VDC
		48 VDC model:	39.4 - 44.2 VDC
		53 VDC model:	43.5 - 48.8 VDC
	- Power OK		Low level
	- Power Off		High resistance
			(Refers to 'PG' and '-Vout' Pin)
	- Pin Specifications		50 VDC / 50 mA / 120 mW max.
Sense Function			8% max. of Vout nom.
			(If sense function is not used, sense pins must be connected to corresponding polarity output pins.)
		See application note:	www.tracopower.com/tpp450a-sense/
Environmental Compliance	- REACH Declaration		www.tracopower.com/info/reach-declaration.pdf
			REACH SVHC list compliant REACH Annex XVII compliant
	- RoHS Declaration		www.tracopower.com/info/rohs-declaration.pdf
			Exemptions: 7(a), 7(c)-I (RoHS exemptions refer to the component concentration only, not to the overall concentration in the product (O5A rule).)
	- SCIP Reference Number		ebb80d8a-b994-4dd4-b470-9253df842d67

Additional Information

Supporting Documents	www.tracopower.com/overview/tpp450a
Frequently Asked Questions	www.tracopower.com/glossary-faq
Glossary	www.tracopower.com/info/glossary.pdf
Service Portal	www.tracoserviceportal.com

All specifications valid at 230 VAC, resistive full load and +25°C after warm-up time, unless otherwise stated.

Downloaded from Arrow.com.

Outline Dimensions

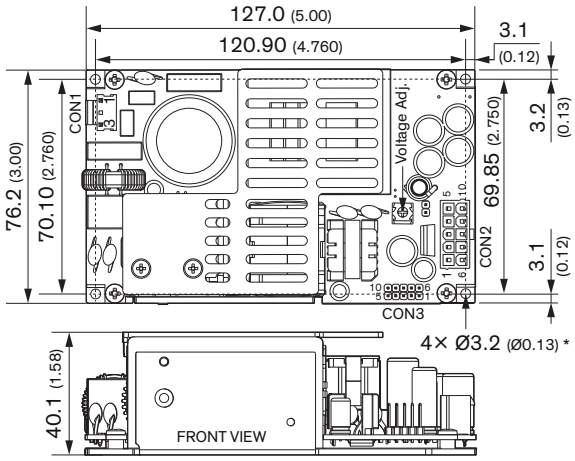

*Any one of the four mounting holes can be considered as PE connection for class I application

All dimensions in mm (inch)
Tolerance: x.x ±0.5 (x.xx ±0.02)
x.xx ±0.25 (x.xxx ±0.010)
Screw locked torque: max. 4.2 kgfcm / 0.41 Nm

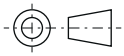

Input	
CON1	
Pin	Function
1	AC (L)
3	AC (N)

Auxiliary	
CON3	
Pin	Function
1	+Fan
2	+Sense
3	+Remote
4	PG
5	+Standby
6	–Fan*1
7	–Sense
8	–Remote*1
9	No pin
10	–Standby*1

*1 Internally connected with –Vout

Output	
CON2	
Pin*2	Function
1-5	+Vout
6-10	–Vout

*2 Terminal rated for 13 A max. (at higher current connection has to be split)

CON1:
Molex housing:
09-50-8031
Molex crimp terminals:
08500106 (2478),
08520112 (6838),
45570

CON2:
Molex housing:
39-01-2105
Molex crimp terminals:
5556,45750

CON3:
Molex housing:
90143-0010
Molex crimp terminals:
90119

© Copyright 2026 Traco Electronic AG

Downloaded from Arrow.com.