Downloaded from Arrow.com.

MICRO SWITCH
a Honeywell Division
FED.MFG.CODE 91929

PACKET

CATALOG LISTING
15PA90-5 SERIES CHART 1

THIS DRAWING COVERS A PROPRIETARY ITEM AND IS THE PROPERTY OF MICRO SWITCH, A DIVISION OF HONEYWELL. THIS DRAWING IS NOT TO BE COPIED OR USED WITHOUT THE APPROVAL OF MICRO SWITCH.

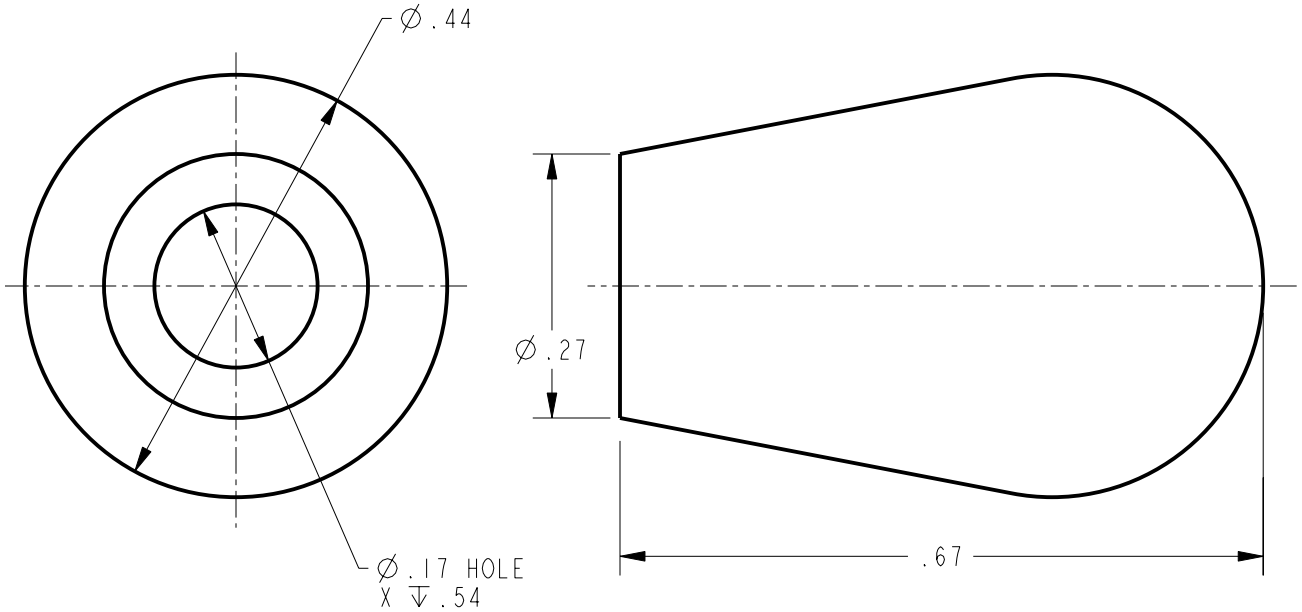

CATALOG LISTING	COLOR	FOR USE ON
15PA90-5W	WHITE (RESILIENT)	AT, TL, TS
15PA90-5BK	BLACK (RESILIENT)	AT, TL, TS

THIRD ANGLE PROJECTION

SCALE 5 : 1

DO NOT SCALE PRINT

UNLESS OTHERWISE SPECIFIED TOLERANCES ARE

ONE PLACE	(.0)	±.030
TWO PLACE	(.00)	±.015
THREE PLACE	(.000)	±.005
ANGLES		±

WEIGHT -

ANSI Y14.5M-1982 APPLIES

CATALOG LISTING 15PA90-5 SERIES CHART 1
PAGE 1 OF 1
ISSUE 6
RELEASE NO. PR-9748
REPLACES -

REVISIONS
A 204410 TSM 15NOV01

DRAWN	TSM	15NOV01
CHECK	SAV	15NOV01
CHECK		
CHECK		

PTC/CAD 2D