VCCS300M

MEDICAL DATASHEET

Single Output Conduction Cooled PSU

BF Rated
Output

4″ x 2″ x 1.61″
Small

Fan-less
Silent

Fan-less conduction cooled 300W scalable power

The VCCS300 Conduction Cooled Power Series delivers a silent 300 Watts of continuous output power in a rugged and miniature 4″ x 2″ x 1.61″ package. It is the ultimate power solution for Class I & II applications where rugged reliability, high efficiency, silent operation, and medical BF-rating are important factors. Power solutions of 300W, 600W, 900W and beyond can be achieved by using the onboard droop current share function, which allows end users to scale up their power requirements or add redundancy depending on their system needs. The VCCS300 series offers standard output voltages of 12, 15, 24, 28, 36, 48 and 56VDC. Non-standard and value-add solutions are also available which allows customers to choose any output voltage from 12V to 58V, saving system designers valuable time and cost. The power series is BF-rated, feature Class I & II isolation and are approved to medical equipment standards including IEC/UL60601-1 Edition 3.2 and IEC/UL60601-1-2 Edition 4 (EMC). The VCCS300 series achieves very high efficiencies up to 95%, best-in-class EMC performance, low no-load power consumption and come with a standard 5-year warranty.

5 YEAR WARRANTY

MAIN FEATURES & BENEFITS

- Powerful 300 Watt (Vin >120V_{RMS})
- Small 4″ x 2″ x 1.61″, exceeding 23W/in^3
- Fan-less conduction cooled & silent operation
- Scalable power architecture
- Parallel units with droop current sharing
- Standard outputs 12, 15, 24, 28, 36, 48, 56V_{DC}
- Fully safety approved & value-add solutions from 12 to 58V_{DC} on request.
- Approved to latest safety standards: IEC/UL60601-3.2 Ed & IEC/UL60601-1-2 4th Ed (EMC)
- High efficiency – up to 95%
- High reliability
- Class I or II installations
- Operating altitude up to 5000m
- Low leakage & touch current
- Low no-load power consumption
- BF rated output
- Best-in-class EMC performance
- 24-hour samples from distribution
- Supplier & technology consolidation
- SEMI F47 compliant
- MIL-STD 810G, MIL-STD 461F & MIL-STD 704F
- Expert technical support
- 5 year warranty

APPLICATIONS

MEDICAL · LAB & ANALYSIS · LED · DISPLAY · LASER · ROBOTICS · COMM · RUGGED

- Ventilators
- Respirators
- Laboratory & Analysis
- Dental Equipment
- Mobile Applications
- Medical Displays
- Medical Lighting
- Medical Lasers
- Infusion pumps
- Endoscopes
- Home Healthcare

SAFETY UL COMPLIANT · SAFETY CE COMPLIANT · ENVIRONMENTAL Conflict Minerals COMPLIANT · ENVIRONMENTAL Proposition 65 COMPLIANT · ENVIRONMENTAL REACH COMPLIANT · ENVIRONMENTAL RoHS Directive (EU) 2015/863 COMPLIANT · ENVIRONMENTAL SCIP COMPLIANT · ENVIRONMENTAL TSCA COMPLIANT · IMMUNITY SEMI F47 COMPLIANT · ENVIRONMENTAL GreenSoft Technology, Inc. VERIFIED

 Vox Power Limited | Unit 2, Red Cow Interchange Estate, Ballymount, Dublin 22, D22 Y8H2, Ireland | T +353 1 4591161 | www.vox-power.com

Downloaded from Arrow.com.

MODEL SELECTION

Model Number	Nominal Output Voltage (V_{DC})	Maximum Rated Output Current (A)	Maximum Rated Power (W)[2]
VCCS300M-12	12	25	300
VCCS300M-15	15	20	300
VCCS300M-24	24	12.5	300
VCCS300M-28	28	10.71	300
VCCS300M-36	36	8.33	300
VCCS300M-48	48	6.25	300
VCCS300M-56	56	5.35	300

Notes
1. Input voltage range for all models is $85V_{AC}$ to $264V_{AC}$.
2. De-rate linearly from 300Watts at $120V_{RMS}$ to 212.5Watts at $85V_{RMS}$.
3. Contact Vox Power for voltages not listed above.

SPECIFICATIONS

All specifications are measured @ T_A=T_{BASE}= 25°C, rated input & rated load unless otherwise stated)

SPECIFICATIONS					
Parameter	Details	Min	Typical	Max	Units
AC Input Voltage	Nominal range is $100V_{RMS}$ to $240V_{RMS}$.	85		264	V_{RMS}
AC Input Frequency	Contact factory for 400Hz operation.	47	50/60	63	Hz
DC Input Voltage	Not covered by safety approvals. Contact Vox Power.	120		370	V_{DC}
Input Current	300Watts output at 120 V_{RMS} input.			3	Amps
Input Current Limit			5		Amps
Inrush Current	$265V_{RMS}$, 25°C (cold start).			20	Amps
Fusing	Each line fused (5x20 Fast acting, 1500A breaking capacity).			5	Amps
Efficiency	See graphs.			95	%
Power Factor			0.99		
Holdup	300Watts output at $120V_{RMS}$ input.	14	16		mS
No load Power consumption	$220V_{RMS}$.		0.8	1	Watts
Output Power Rating	De-rate linearly from 300Watts at $120V_{RMS}$ to 212.5 Watts at $85V_{RMS}$.			300	Watts
Output Voltage	All Models. Initial Setting, -25°C to 125°C	-1		1	$\%V_O$
Load Regulation	All Models.	-50		50	mV
Line Regulation	All Models.	-0.1		0.1	$\%V_O$
Ripple & Noise[2]	12V Model. 20MHz BW, V_{PKPK}. All Other Models. 20MHz BW, V_{PKPK}.			1.5 1	$\%V_O$
Minimum Load	All Models.			0	Watts
Transient Response	25% to 75% I_{RATED}, 1A/uS. Recovery to within 10% of V_O.			6 500	$\%V_O$ uS
Turn on Rise Time	All Models. 10% to 67% of V_O.		2		mS
Turn on Delay	All Models, All Vin, All loads.		800		mS
Current Share	All Models. Droop mode, Vmax @0% load, Vmin @100% Load.	-2.5%		+2.5%	$\%V_O$
Temperature Coefficient	All Models.	-0.02		0.02	$\%V_O$/°C
Over Current Protection	All Models. Constant current mode.	105	115	125	$\%I_{RATED}$
Short Circuit Protection	All Models. Hiccup mode. Activation Threshold.			80	$\%V_O$
Over Voltage Protection	All Models. Auto Restart.			125	$\%V_O$
Over Temperature Protection	All Models. Auto Restart.	105		125	°C
Reliability [1]	All Models.		1.1		FPMH
Warranty	Standard terms and conditions apply.			5	Years
Size	101.3 (L) x 50.8 (W) x 40.2 (H). See diagram for tolerance details				mm
Weight	310				Grams

Notes
1. 30˚C base & ambient, 100% load, SR332 Issue 2 Method I, Case 3, Ground, Fixed, Controlled
To ensure reliability, component temperatures must be maintained below recommended levels in the end application.
The "System cooling" section of the user manual should be reviewed in detail and temperatures verified in the end application.
2. Up to 3% in burst mode with no external capacitance.

SAFETY SPECIFICATIONS					
Parameter	Details	Typical	Max	Units	Notes
Isolation Voltages	Input to Output (2 MOPP) [1] Input to Chassis (1 MOPP) Output to Chassis (1 MOPP)		4000 2000 1500	V_{AC} V_{AC} V_{AC}	
Earth Leakage Current	NC/SFC (Class I), 264Vac, 63Hz, 25°C	186/337	<300/<400	µA	
Touch Leakage Current (Enclosure to Earth)	NC (Class I/Class II), 264Vac, 63Hz, 25°C SFC (Class I/Class II), 264Vac, 63Hz, 25°C	0/186 186/337	<20/<300 <300/<500	µA	
Patient Leakage Current (Output to Earth)	NC (Class I/Class II), 264Vac, 63Hz, 25°C SFC (Class I/Class II), 264Vac, 63Hz, 25°C	33/77 77/150	<100/<100 <100/<200	µA	

Notes
1. Use DC equivalent voltage to test assembled unit.
2. NC = Normal Condition, SFC = Single Fault condition
3. Leakage currents will sum for paralleled units. N units will have N times the leakage current.

INSTALLATION SPECIFICATIONS			
Parameter	Details	Parameter	Details
Equipment class	I or II [1]	Flammability Rating	94V-2
Overvoltage category	II	Ingress protection rating	IP10
Material Group	IIIb (indoor use only)	Intended usage environment	Home Healthcare (M)/ Industrial (S)
Pollution degree	2		

1. Conditions of acceptability may apply. See UL report.

Downloaded from Arrow.com.

ENVIRONMENTAL						
Parameter	Details	Non-Operational		Operational		Units
		Min	Max	Min	Max	
Air Temperature	Operational limits subject to appropriate de-ratings	-51	+85	-40[1]	70	°C
Humidity	Relative, non-condensing	5	95	5	95	%
Altitude		-200	5000	-200	5000[2]	m
Shock	IEC60068-2-27: Half sine, 3 axes, 3 positive & 3 negative.		50, 11		30,18	g, mS
Vibration	IEC60068-2-6: Sine,10 – 500 Hz, 3 axes, 1 oct/min., 10 cycles each axis IEC60068-2-64: Random, 5 – 500 Hz, 3 axes, 30 min. MIL-STD-810G: Method 514.6, Procedure I (General Vibration) Category 4 (Trucks & Trailers, Composite wheeled vehicle), Figure 514.6C-3. Category 7 (Aircraft, Jet cargo), Figure 514.6C-5 General exposure Category 24, (All, Minimum integrity) Figure 514.6E-1		 0.02,2.56		2 0.0122,1	g g2/Hz, g_{RMS}
Thermal shock	MIL-STD-810G: Method 503.5 Procedure I-C. Multi-cycle. 3 shocks.	-51	85			°C

Notes
1. Some specifications may not be met below -20°C.
2. Additional power derating may be necessary at high altitudes to ensure component temperatures remain within specification.

ELECTROMAGNETIC COMPLIANCE – EMISSIONS		
Phenomenon	Basic EMC Standard	Test Details
Radiated emissions, electric field	EN55011/32	Class B compliant
Conducted emissions	EN55011/32, FCC part 15, CISPR 32/11	Class B compliant
Harmonic Distortion	IEC61000-3-2	Compliant
Flicker & Fluctuation	IEC61000-3-3	Compliant
Radiated emissions, electric field, 30Hz-18GHz.	MIL-STD-461F: RE102 (Ground, Fixed)	Compliant (When mounted in enclosure)
Conducted emissions, power leads, 10kHz-10Mhz.	MIL-STD-461F: CE102	Compliant

ELECTROMAGNETIC COMPLIANCE – IMMUNITY		
Phenomenon	Basic EMC Standard	Test Details
Electrostatic discharge	IEC61000-4-2	Test level 4: 15kV air, 8kV contact
Radiated RF EM fields	IEC61000-4-3	Test Level 3: (10V/m, 80MHz-2.7GHz) sine wave AM 80% 1kHz
Proximity fields from RF wireless communications equipment	IEC61000-4-3	Test levels as per IEC60601-1-2:2014 Table 9
Electrical Fast Transients/bursts	IEC61000-4-4	Test Level 3: (2kV Power, 1kV I/O) 5kHz(ed3) & 100kHz(ed4)
Surges	IEC61000-4-5	Test Level 3: 1kV L-N, 2kV L-E
Conducted disturbances induced by RF fields	IEC61000-4-6	Test Level 3: 10V, 0.15 to 80MHz sine wave AM 80% 1kHz
Power Frequency Magnetic Fields	IEC61000-4-8	Test level 4: 30A/m 50Hz
Voltage Dips	IEC61000-4-11[2]	0% 10ms (Criterion A) 0% 20ms (Criterion B [3]) 70% 0.5s, 40% 0.2s (Criterion A at 240V and Criterion B at 100V)
Voltage interruptions	IEC61000-4-11	0% 250/300 cycle as per IEC60601-1-2:2014 (Criterion B)
Voltage Sag Immunity	SEMI-F47-0706[2]	0% 20mS (Criterion B [3]) 80% 1s,80% 10s,90% continuous (Criterion A) 70% 0.5s, 50% 0.2s (Criterion A at 240V and Criterion B at 100V [4])
Shipboard Electric Power. Voltage Spike Test	MIL-STD-1399, SECTION 300A	Type 1, 115V 60Hz single phase
Conducted susceptibility, power leads	MIL-STD-461F: CS101	30Hz-150kHz
Conducted susceptibility, Bulk cable injection	MIL-STD-461F: CS114	10kHz-200MHz
Conducted susceptibility, Bulk cable injection, impulse excitation	MIL-STD-461F: CS115	
Conducted susceptibility, damped sinusoidal transients, cables and power leads	MIL-STD-461F: CS116	10kHz-100MHz
Radiated susceptibility, Magnetic field	MIL-STD-461F: RS101	30Hz-100kHz
Radiated susceptibility, electric field	MIL-STD-461F: RS103	2 MHz to 40 GHz, 20V
Aircraft Electric Power Characteristic	MIL-STD-704F	SAC102,104,105,109,110 (MIL-HDBK-704-2) & SXF102,104,105,109,110 (MIL-HDBK-704-6)

Notes:
1. Criterion A = No degradation of performance or loss of function.
   Criterion B = Temporary degradation of performance or loss of function is allowed, provided the function is self-recoverable.
   Criterion C = Temporary loss of function is allowed but requires operator intervention to recover.
2. Tested at nominal range (100V to 240V). Line deratings applied where appropriate.
3. Criterion A is achieved for all input voltages when Pout <= 280W
4. Criterion A is achieved for full power when Vin >=160V or at all input voltages when Pout <= 200W

AGENCY APPROVALS		
Standard	Details	File
IEC 60601-1:2005, COR1:2006, COR2:2007, AMD1:2012	Edition 3.1 - Medical electrical equipment— Part 1: General requirements for basic safety and essential performance	
ANSI/AAMI ES60601-1: A1:2012, C1:2009/(R)2012 & A2:2010/(R)2012	Medical electrical equipment— Part 1: General requirements for basic safety and essential performance	UL: E316486
CAN/CSA-C22.2 No. 60601-1:14	Medical electrical equipment— Part 1: General requirements for basic safety and essential performance	
CE MARK	LVD 2014/35/EU, EMC 2014/30/EU, RoHs 2011/65/EU	
Approval certificates available at www.vox-power.com		

Downloaded from Arrow.com.

POWER RATINGS
Mains Voltage Derating [8]

Mains Voltage Derating Table		
Mains Voltage (V_{RMS})	Output Power	(%)
120	300	100%
110	275	91.7%
100	250	83.3%
90	225	75.0%
85	212.5	70.8%
The output power must be de-rated by 2.5% for every 3 volts below $120V_{RMS}$, down to a minimum of $85V_{RMS}$.		

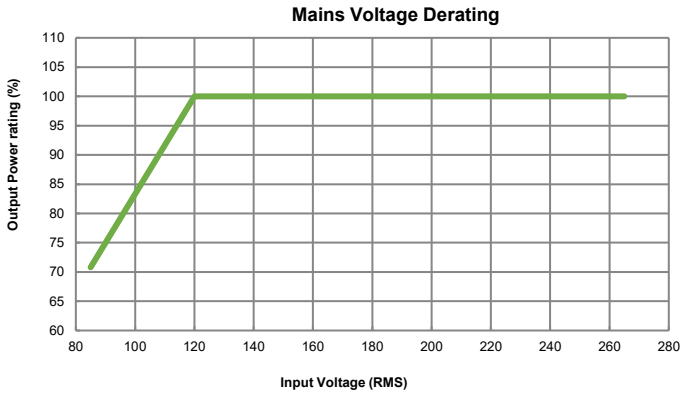

Typical Thermal Performance [7]

Typical Convection Cooled Performance. VIN = 120VAC					
Ambient (°C)	0	20	30	50	70
12V	300	240	210	141	54
15V	300	300	268	172	54
24V	300	294	264	186	54
28V	300	300	272	159	54
36V	300	300	286	193	54
48V	300	300	286	196	54
56V	300	300	292	199	54

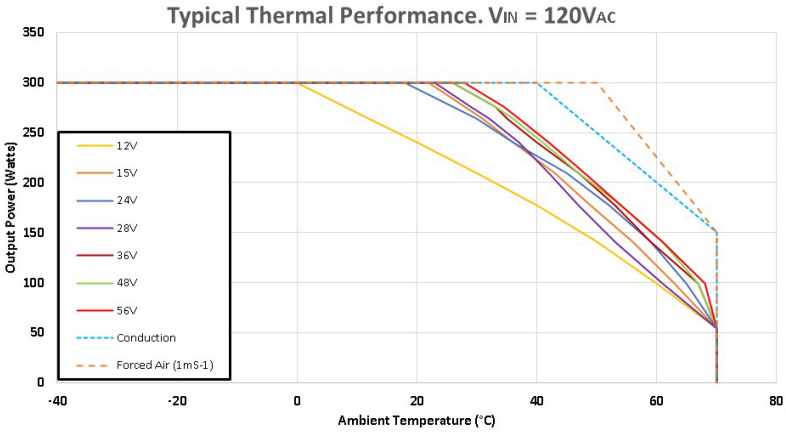

Notes:

1. Ambient air temperature is the air temperature immediately surrounding the PSU. If the PSU is mounted within an enclosure, the internal enclosure ambient temperature should be used.
2. Typical convection cooled performance is measured under controlled conditions in a sealed chamber of approximately 0.5mx0.3mx0.5m with the unit positioned in the centre of the volume.
3. The profiles shown ensure all components remain within their IPC9592B deratings.
4. Operation of components above the recommended temperatures will result in reduced lifetime of the unit and invalidate the warranty.
5. The conduction cooled rating for all models applies under the following conditions: Baseplate temperature [2] ≤ $T_{AMBIENT}$ + 15°C
6. The forced air rating for all models applies for airflow ≥1mS^{-1} (200LFM). See *Mechanical Dimensions and Mounting* section for Airflow direction.
7. See user manual for further details of ratings and safety certifications.

Mains Voltage deratings are cumulative with thermal deratings.

TYPICAL EFFICIENCIES

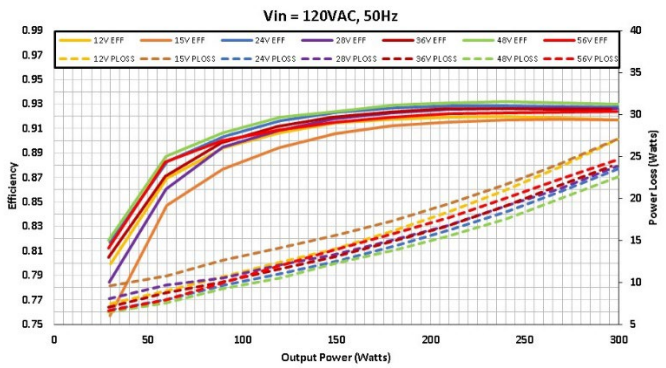

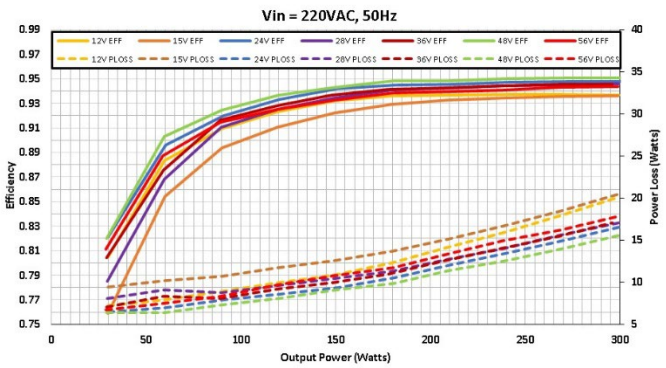

Downloaded from Arrow.com.

MECHANICAL DIMENSIONS AND MOUNTING SCREWS			
Location	Details	Penetration	Tightening
Baseplate Mount (Screw from top side): N1 – N4 [1]	M3 Hex Socket Head Cap Screw	3mm Head height	0.50NM
Baseplate Mount (Screw from bottom side): N1 – N4	M4 - Customer Preference	6mm from bottom of Baseplate	0.55NM
Output Terminal	M4 SEM POZI	M4 SEM screw, 8mm max length	0.55NM

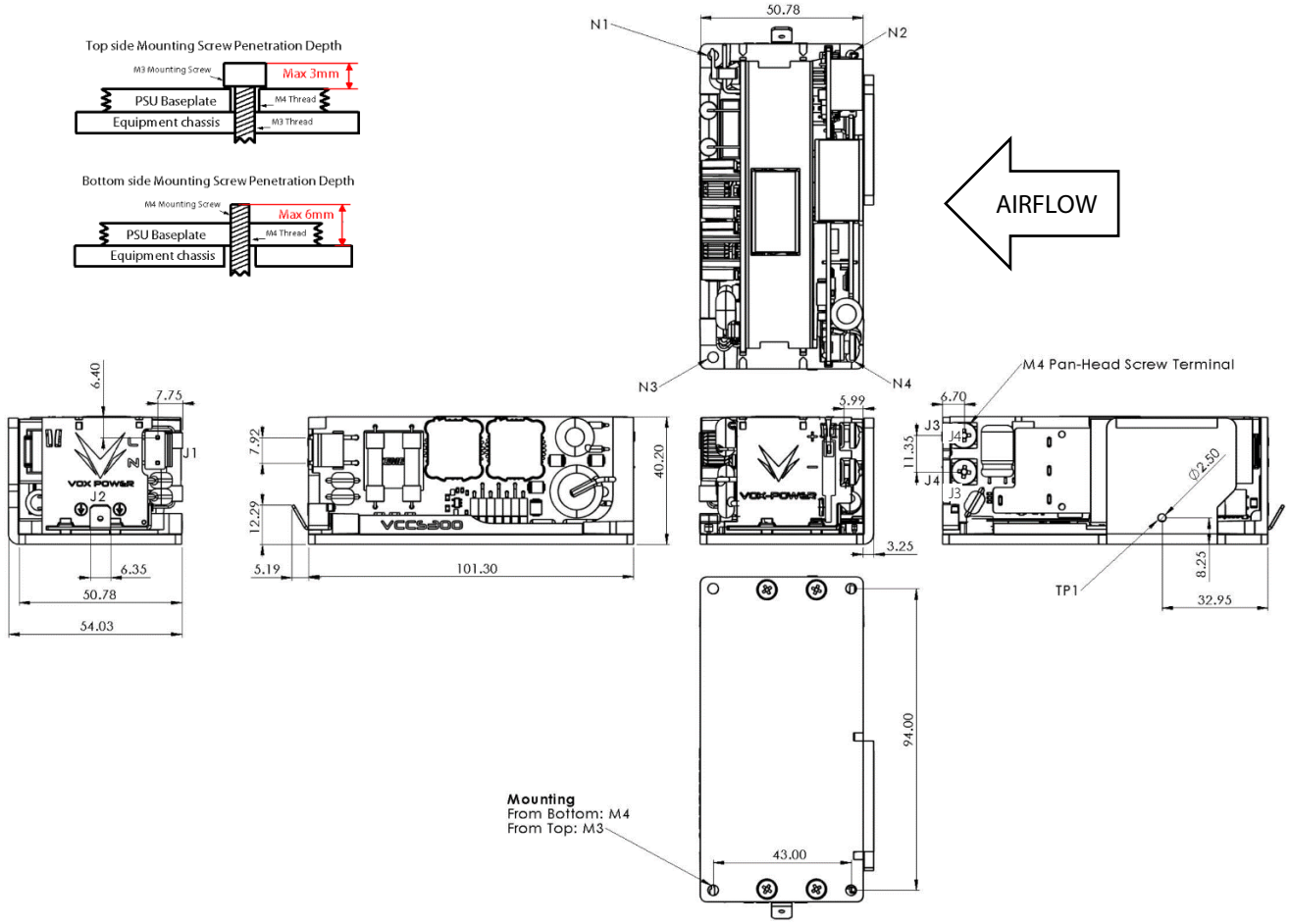

Notes

1. Top Side mounting screws are obstructed by components in some areas. M3 Hex socket screws should be used to allow angled access for tightening with a 2.5mm hex ball screwdriver. Care should be taken to ensure components are not damaged while tightening.

Downloaded from Arrow.com.

CONNECTOR DETAILS

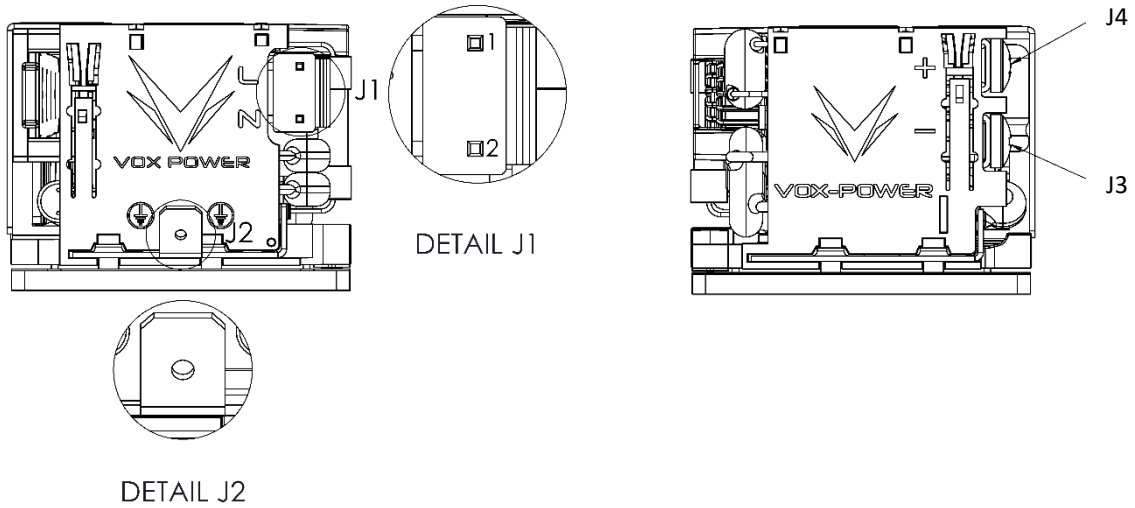

MATING CONNECTORS

Ref.	Details	Manufacturer	Housing	Terminal
J1 - Mains Input Cct. 1 - Live, Cct. 2 - Neutral	2 Pin, 7A, 250V_{AC}, 7.92mm Locking [1]	JST	VAR-2	SVA-41T-P1.1
J2 - Protective Earth	FASTON, PIDG series, Positive lock 0.25EX	TE Connectivity	-	165536-1
J4 - Positive Output Power J3 - Negative Output Power	M4 terminal, 0.55Nm	KST	-	SNBS5-4

Notes
1. Cable 18-20AWG, 300V, >7A, 105°C.
2. Direct equivalents may be used for any connector parts.
3. All cables must be rated 105°C min, equivalent to UL1015

PART NUMBERING SYSTEM

SERIES	VCCS300	M	-	12	-	0	0	0	Factory use

Product Family
M - Medical

Output Voltage
Standard
12/15/24/28/36/48/56

Contact your Distributor or Vox Power representative for information regarding non-standard output voltage requirements

All specifications are believed to be correct at time of publishing. Vox Power Ltd reserves the right to make changes to any of its products and to change or improve any part of the specification, electrical or mechanical design or manufacturing process without notice. Vox Power Ltd does not assume any liability arising out of the use or application of any of its products and of any information to the maximum extent permitted by law. No license, express or implied, by estoppel or otherwise, to any intellectual property rights is granted by this document or by any products of Vox Power Ltd. VOX POWER LTD DISCLAIMS ALL WARRANTIES AND REPRESENTATIONS OF ANY KIND WHETHER EXPRESS OR IMPLIED, INCLUDING, BUT NOT LIMITED TO, IMPLIED WARRANTIES OF SUITABILITY, FITNESS FOR PURPOSE, MERCHANTABILITY AND NONINFRINGEMENT.
Please consult your local distributor or Vox Power directly to ensure that you have the latest revision before using the product and refer to the latest relevant user manual for further information relating to the use of the product. Unless specifically otherwise agreed in writing by Vox Power, products sold by Vox Power are not intended for use in connection with life support systems, human implantations, nuclear facilities or systems, aircraft spacecraft, military or naval missile, ground support or control equipment used for the purpose of guidance navigation or direction of any aircraft spacecraft or military or naval missile or any other application where product failure could lead to loss of life or catastrophic property damage. The user will indemnify and hold Vox Power harmless from any loss, cost or damage resulting from its breach of the provisions.

Downloaded from Arrow.com.