MICRO SWITCH
a Honeywell Division
FED. MFG. CODE 91929

SWITCH – ENCLOSED

CATALOG LISTING
1CH106–6

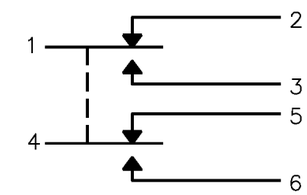

CIRCUIT DIAGRAM

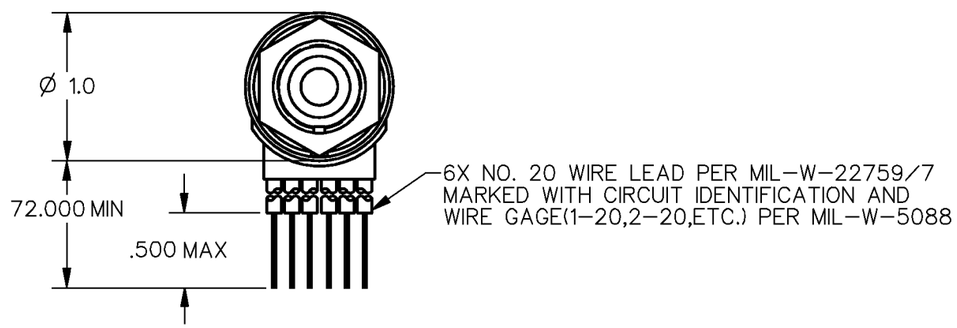

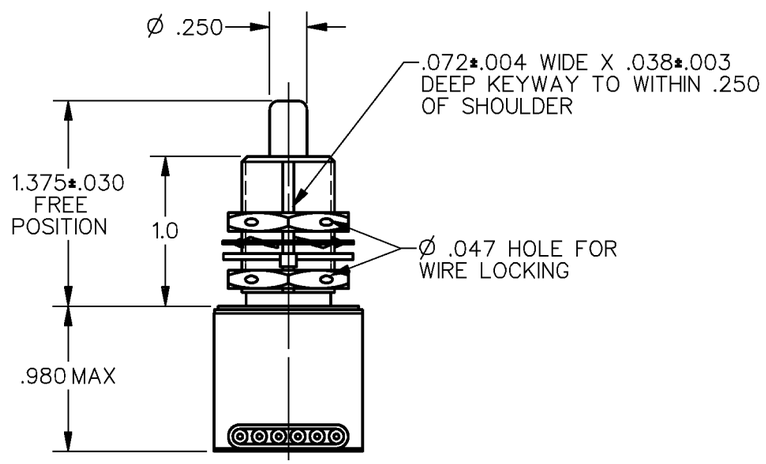

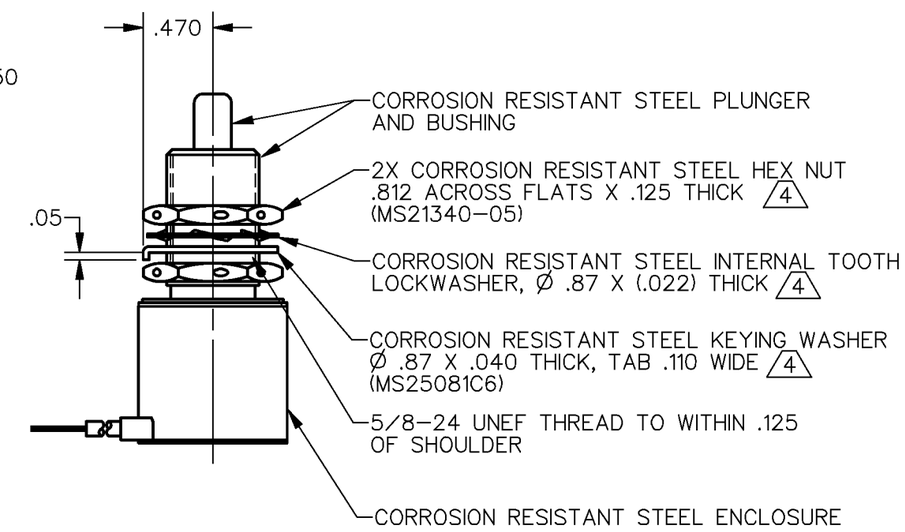

NOTES
1 – SWITCH SEALED PER MIL–PRF–8805, SYMBOL 3
2 – MICRO SWITCH IDENTIFICATION, CIRCUIT DIAGRAM, CATALOG LISTING, FED. MFG. CODE AND DATE CODE ARE PERMANENTLY MARKED ON SIDE OF HOUSING
3 – COINCIDENCE OF OPERATING AND RELEASING POINTS: .010 OF PLUNGER TRAVEL
4 HARDWARE MAY BE PACKAGED UNASSEMBLED PER MIL–PRF–8805

THIS DRAWING COVERS A PROPRIETARY ITEM AND IS THE PROPERTY OF MICRO SWITCH. A DIVISION OF HONEYWELL. THIS DRAWING IS NOT TO BE COPIED OR USED WITHOUT THE APPROVAL OF MICRO SWITCH

THIRD ANGLE PROJECTION

SCALE FULL

DO NOT SCALE PRINT

CHARACTERISTICS

OPERATING FORCE	6–12 LB
FULL OVERTRAVEL FORCE	30 LB MAX
RELEASE FORCE	4 LB MIN
PRETRAVEL	.040 MAX
DIFFERENTIAL TRAVEL	.020 MAX
OVERTRAVEL	.250 MIN

ELECTRICAL DATA

CONTACT ARRANGEMENT
2X S P D T

LOAD	28 VDC	
	SEA LEVEL	50,000 FT.
RES	4	4
IND	2	2
MOTOR	4	

UNLESS OTHERWISE SPECIFIED TOLERANCES ARE

ONE PLACE	(.0)	±.030
TWO PLACE	(.00)	±.015
THREE PLACE	(.000)	±.005
ANGLES		±

WEIGHT 7.0 OZ MAX

ANSI Y14.5M–1982 APPLIES

CATALOG LISTING 1CH106–6
PAGE 1 OF 1
RELEASE NO. PR–7978
REPLACES
ISSUE M 11
CHECK
REVISIONS
A CO–77504–A S A V 14 MAR 94
B CO–75787–C T S M 26 MAY 94
C C092293 J A K 5 FEB 98
D C094194 D L T 4 MAR 99
E 201294 C S L 27 SEP 00
CHECK
CHECK
RASTER
DRAWN S A V 14 MAR 94

Downloaded from Arrow.com.