QSFPP-4X10GE-LR: JUNIPER COMPATIBLE PART

QSFPP-4X10GE-LR-IO: Integra Part

Product Description

QSFP+, 1310nm, PSM LR4 SMF 10km, 40G DDM, Juniper QSFPP-4X10GE-LR Compatible

Integra manufactures the highest quality **QSFP** transceivers in the industry, designed to be 100% interoperable with all OEM platforms. We're the first optics manufacturer in the Western Hemisphere to invest in high-speed robots, allowing us to scale our operations to handle virtually any order, large or small, and ensure every transceiver is correctly coded and tested 100% of the time.

DOWNLOAD **DATASHEET** | $ REQUEST A **QUOTE**

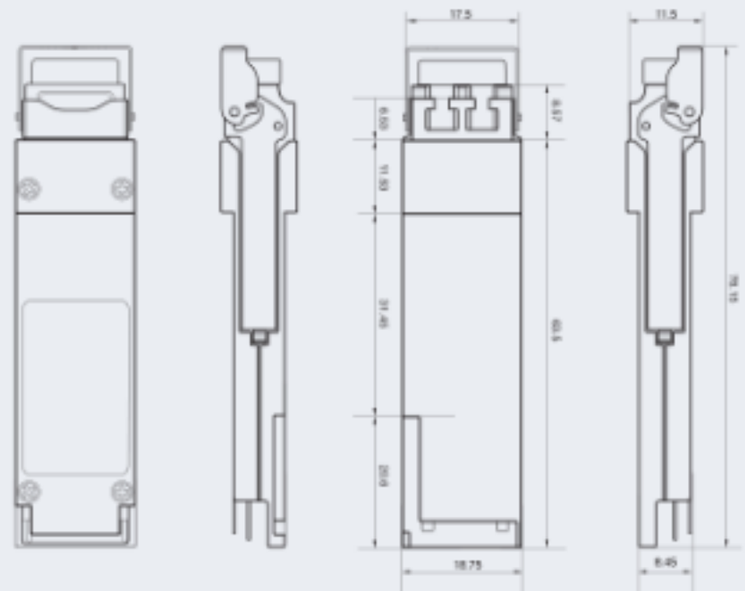

Related Products

If you're interested in this component, you might also want to search for these related products, accessories, or our Smart Coder and Smart Coder Package

Products

- 100GBASE-SR10-IO
- 100GBASE-SR10.3C20-IO
- CFP-100GBASE-ER4-IO
- CFP-100GBASE-ER4.3C20-IO
- CFP-100GBASE-LR4-IO
- CFP-100GBASE-LR4.3C20-IO
- View more

Top Accessories

- IFC-CCR125
- OTE-OPM-MCH
- OTE-CPM-18
- OTE-DPM-48-100

Smart Coder

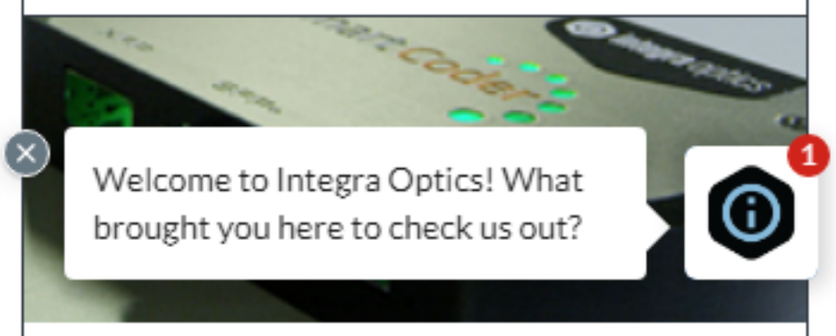

Giving network engineers and field techs the power to quickly and easily reconfigure transceivers in the field for any network hardware.

Downloaded from Arrow.com.