COOLX®1800 SERIES

HIGH EFFICIENCY, INTELLIGENT AND RELIABLE 1800 W MODULAR POWER SUPPLIES

Advanced Energy's CoolX®1800 series is an intelligent modular power supply. The CoolX1800 delivers an incredible 1800 W in a compact 1U high package with PMBus™ digital communications, control and reliability in addition to the most comprehensive feature set and specifications available.

New -G option available on CoolX series. This option allows customers and safety agencies to carry out the full 4 kVAC and 5.6 kVDC primary to secondary isolation (Hi-Pot) test on a complete power supply and system, exactly as it will be used and installed in system with no modifications required.

PRODUCT HIGHLIGHTS

Modular Power Supply
- Up to 1800 W
- Up to 12 outputs
- All outputs isolated (1850 VAC)
- Variable fan speed control

Reliability
- MTBF > 200,000 hours
- Level 4 input surge protection
- 23.5 W always ON auxiliary power output
- Safety approved to 5000 m altitude
- 91% efficiency
- Five-year warranty

Flexibility
- Analog and digital management — PMBus™ monitoring and control capability
- Field-configurable — plug and play power
- Series and parallel outputs for higher voltages and currents
- Mounting options — base/side and DIN-Rail mounting

TYPICAL APPLICATIONS

Medical
- Clinical diagnostic equipment, medical lasers, dialysis equipment, radiological imaging, clinical chemistry

Industrial
- Test and measurement, industrial machines, automation equipment, printing, telecommunications, MIL-COTS

Audio Equipment
- Hi Rel, harsh industrial electronics, radar (marine- and ground-based), communications, test and measurement

AT A GLANCE

	CX18S	CX18M
Power		
	1800 W	1800 W
Slots		
	6	6

Cooling

Variable fan speed control

Parameters

262 mm x 127 mm x 41 mm (10.5 in x 5 in x 1U)

Certification and Compliance

Medical (CX18M)
- IEC60601-1 3rd edition, IEC60601-1-2 4th edition (EMC)
- 2 MOPP
- Dual fused

Industrial (CX18S)
- IEC60950, IEC62368-1
- SEMI F47*

Defense/Aero (All Models)
- MIL-STD-810G

Downloaded from Arrow.com.

MODULES

CoolX CoolMods Table				
Parameter	Vnom (V)	Set Point Adjust Range (V)	Imax (A)	Power (W)
Single Output Modules (1 Slot)				
CmA	5	2.5-6.0	30.0	150
CmB[1]	12	6.0-15.0[2]	23.3	280
CmC	24	15.0-28.0	12.5	300
CmD	48	28.0-58.0[3]	6.25	300
High Power Modules (3 Slot)				
CmE[4]	24	24-25.2	37.5	900
CmF[4]	48	48-50.4	18.75	900
Dual Output Modules (1 Slot)				
CmG[5] V1	24	3.0-30.0	4.0	120
V2	24	3.0-30.0	4.0	120
CmH[6] V1	5	3.0-6.0	10.0	60
V2	24	3.0-30.0	4.0	120
Wide Trim Modules (1 Slot)				
CmA-W01	5	1.0-6.0	30.0	150
CmB-W01	12	1.0-15.0[2]	23.3	280
CmC-W01	24	2.0-28.0	12.5	300
CmD-W01	48	3.0-58.0[3]	6.25	300
High Voltage Modules (1 Slot)				
CmK[7]	200	175-205	1.0	200

[1] Full dynamic specifications may not be met at full load when output voltage is trimmed above 13 V.

[2] Max Trim 14 V when used with High Power Module

[3] Max Trim 56 V when used with High Power Module

[4] a) Only one High Power module (CmE or CmF) can be used per CoolPac.
b) During load transients starting from 0% load on the High Power modules, other modules in the CoolPac may experience an output voltage dynamic during the load change. Contact applications support for details or support..

[5] For the CmG module the max combined power of both outputs is 200 W.

[6] For the CmH module the max combined power of both outputs is 180 W.

*SEMI F47 compliant at input voltages > 180 VAC. Consult Advanced Energy for details.

[7] When a CmK module is used in the same pack as a CmE or CmF module, one module slot must remain unpopulated.

Downloaded from Arrow.com.

ELECTRICAL SPECIFICATIONS

Input					
Parameter	**Conditions/Description**	**Min**	**Nom**	**Max**	**Units**
Nominal Input Voltage Range	Universal Input 47-440 Hz	100	—	240	VAC
AC Operating Input Range		85	—	264	VAC
Extended AC Operating Range	Maximum for 5 seconds	—	—	300	VAC
DC Input Voltage Range		120	—	300	VDC
Input Current	90 VAC @ 1080 W	—	—	14.5	A
Inrush Current	230 VAC @ 1800 W	—	—	40	A
Power Factor	120 VAC @ 1400 W	0.98	—	—	—
Undervoltage Lockout	Shutdown	65	—	74	VAC
Input Fuses Rating	Dual Fused (Line and Neutral) 250 VAC	—	16	—	A
Efficiency	230 VAC, 1800 W with 6 x CmC CoolMods	91	—	—	%

Output					
Parameter	**Conditions/Description**	**Min**	**Nom**	**Max**	**Units**
Single Output Modules (1 Slot)					
Line Regulation	From minimum to maximum rated voltage	—	—	±0.2	%
Load Regulation	For 0 to 100% load change	—	—	±0.4	%
Transient Response	For 25% to 75% load change, 0.5 A/µS: voltage deviation	—	—	±6	%
	For 25% to 75% load change, 0.5 A/µS: settling time	—	—	500	µs
Ripple and Noise	Peak-Peak, 20 MHz BW, 100 mV or % of nominal	—	—	1.0	%
Overvoltage Protection	Tracking OVP (autorecovery, % of setpoint)	103	—	125	%
	Hiccup OVP (% of maximum voltage)	107	—	160	%
Remote Sense	Maximum cable drop compensation	—	—	0.5	VDC
Rise Time	Monotonic	—	—	5	ms
Turn-On Delay	From AC in	—	—	1000	ms
	From Global Enable	—	—	12	ms
	From CoolMod Enable	—	—	12	ms
Hold-Up Time	For nominal output voltages at full load	16	—	—	ms
Overcurrent Protection	Straight line current limit with hiccup protection at 35% Vo nom	105	—	130	%
Short Circuit Protection	Hiccup, Autorecovery	—	—	—	—
Overtemperature Protection	Autorecovery	—	—	—	—
Capacitive Load		—	—	10	mF
Dual Output Modules (1 Slot)					
Line Regulation	From minimum to maximum rated voltage	—	—	±0.5	%
Load Regulation	For 0 to 100% load change	—	—	±2	%
Transient Response	For 25% to 75% load change, 0.5 A/µS: voltage deviation	—	—	±10	%
	For 25% to 75% load change, 0.5 A/µS: settling time	—	—	1000	µs
Ripple and Noise	Peak-Peak, 20 MHz BW, 100 mV or % of nominal[1]	—	—	2	%
Overvoltage Protection	Hiccup OVP (% of maximum voltage)	110	—	130	%
Rise Time	Monotonic	—	—	20	ms
Turn-On Delay	From AC in	—	—	1000	ms
	From Global Enable	—	—	100	ms
	From CoolMod Enable	—	—	100	ms

[1] Measure with a 0.1 µF ceramic capacitor in parallel with a 10 µF electrolytic capacitor.

Downloaded from Arrow.com.

ELECTRICAL SPECIFICATIONS (CONTINUED)

Hold-Up Time	For nominal output voltage at full load	16	—	—	ms
Overcurrent Protection	Hiccup, Autorecovery	100	—	250	%
Short Circuit Protection	Hiccup, Autorecovery	—	—	—	—
Overtemperature Protection	Hiccup, Autorecovery	—	—	—	—
Capacitive Load		—	—	270	µF
High Power Modules (3 Slots)					
Line Regulation	From minimum to maximum rated voltage	—	—	±0.5	%
Load Regulation	For 0 to 100% load change	—	—	±3.5	%
Transient Response	For 25% to 75% load change, 0.5 A/µS: voltage deviation	—	—	±4	%
	For 25% to 75% load change, 0.5 A/µS: settling time	—	—	1000	µs
Ripple and Noise	Peak-Peak, 20 MHz BW, 100 mV or % of nominal	—	—	3.5	%
Overvoltage Protection	Tracking OVP (autorecovery, % of setpoint)	102	—	120	%
	Hiccup OVP (% of maximum voltage)	107	—	130	%
Remote Sense	Maximum cable drop compensation	—	—	0.5	VDC
Rise Time	Monotonic	—	—	5	ms
Turn-On Delay	From AC in	—	—	1000	ms
	From Global Enable	—	—	20	ms
	From CoolMod Enable	—	—	20	ms
Hold-Up Time	For nominal output voltage at full load	16	—	—	ms
Overcurrent Protection	Straight line current limit with hiccup protection at 35% Vo nom	105	—	130	%
Short Circuit Protection	Hiccup, Autorecovery	—	—	—	—
Overtemperature Protection	Autorecovery	—	—	—	—
Capacitive Load		—	—	2.5	mF
Wide Trim Power Modules (1 Slot)					
Line Regulation	From minimum to maximum rated voltage	—	—	±0.25	%
Load Regulation	For 0 to 100% load change	—	—	±0.4	%
Transient Response	For 25% to 75% load change, 0.5 A/µS: voltage deviation	—	—	±6	%
	For 25% to 75% load change, 0.5 A/µS: settling time	—	—	500	µs
Ripple and Noise	Peak-Peak, 20 MHz BW, 100 mV or % of nominal	—	—	1.0	%
Overvoltage Protection	Tracking OVP (autorecovery, % of setpoint)	103	—	125	%
	Hiccup OVP (% of maximum voltage)	107	—	160	%
Remote Sense	Maximum cable drop compensation	—	—	0.5	VDC
Rise Time	Monotonic	—	—	5	ms
Turn-On Delay	From AC in	—	—	1000	ms
	From Global Enable	—	—	12	ms
	From CoolMod Enable	—	—	12	ms
Hold-Up Time	For nominal output voltage at full load	16	—	—	ms
Overcurrent Protection	Straight line current limit with hiccup protection at 35% Vo nom	105	—	130	%
Short Circuit Protection	Hiccup, Autorecovery	—	—	—	—
Overtemperature Protection	Autorecovery	—	—	—	—
Capacitive Load		—	—	10	mF
High Voltage Modules (1 Slot)					
Line Regulation	From minimum to maximum rated voltage	—	—	±0.5	%
Load Regulation	For 0 to 100% load change	—	—	±1	%
Transient Response	For 25% to 75% load change, 0.5 A/µS: voltage deviation	—	—	±3.75	%
	For 25% to 75% load change, 0.5 A/µS: settling time	—	—	500	µs

Downloaded from Arrow.com.

ELECTRICAL SPECIFICATIONS (CONTINUED)

Ripple and Noise	Peak-Peak, 20 MHz BW, 100 mV or % of nominal	—	—	1	%
Overvoltage Protection	Tracking OVP (autorecovery, % of setpoint)	103	—	125	%
	Hiccup OVP (% of maximum voltage)	112	—	122	%
Rise Time	Monotonic	—	—	20	ms
Turn-On Delay	From AC in	—	—	1000	ms
	From Global Enable	—	—	30	ms
	From CoolMod Enable	—	—	30	ms
Hold-Up Time	For nominal output voltage at full load	16	—	—	ms
Overcurrent Protection	Straight line current limit with hiccup protection at 35% Vo nom	105	—	130	%
Short Circuit Protection	Hiccup, Autorecovery	—	—	—	—
Overtemperature Protection	Autorecovery	—	—	—	—
Capacitive Load		—	—	10	µF

Auxiliary Output

Parameter	Conditions/Description	Min	Nom	Max	Units
Auxiliary Output Voltage	Aux Voltage Option A	11.6	12	12.4	V
	Aux Voltage Option B	4.8	5	5.2	V
Load Regulation		—	—	±2	%
Line Regulation	For ±10% change from nominal line	—	—	±0.5	%
Ripple and Noise	Peak-Peak, 20 MHz BW, % of nominal	—	—	4	%
Maximum Output Current	Aux Voltage Option A	—	—	1.96	A
	Aux Voltage Option B	—	—	4.7	A
Load Capacitance		—	—	1000	µF
Output Overcurrent Protection	Hiccup	105	—	145	%
Short Circuit Protection	Yes, Autorecovery	—	—	—	—

Galvanic Isolation

Parameter	Conditions/Description	Min	Nom	Max	Units
Input to Output	Reinforced (2 x MOPP); contact Advanced Energy for Hi-Pot instructions	4000	—	—	VAC
Input to Case	Basic (1 x MOPP)	1850	—	—	VAC
Output to Case	Basic (1 x MOPP)	1850	—	—	VAC
Output to Output	Basic (1 x MOPP)	1850	—	—	VAC
CmG, CmH V1-V2	Operational	500	—	—	VDC

Reliabilty

Parameter	Conditions/Description	Min	Nom	Max	Units
Reliability and MTBF	Telecordia SR-332, Issue 4 CoolMod	—	0.11	—	Fpmh
	CoolPac + Fans	—	0.60	—	Fpmh
Warranty	5 years	—	—	—	—

Environmental

Parameter	Conditions/Description	Min	Nom	Max	Units
Operating Temperature	Operates below -20°C after 10 min warmup	-30	—	70	°C
Storage Temperature		-40	—	85	°C
Derating	See derating curves	—	—	—	—
Relative Humidity	Non-condensing	5	—	95	%RH
Shock and Vibration	MIL-STD-810G Method 514.6	—	—	—	—
Altitude		—	—	5000	m

Downloaded from Arrow.com.

ELECTRICAL SPECIFICATIONS (CONTINUED)

Leakage Currents				
Parameter	**Conditions/Description**	**Nom**	**Max**	**Units**
AC Leakage Current (Input to Earth Ground) — Standard				
Normal Condition (High Line)	Mains Voltage 264 VAC/60 Hz	244	300	µA
Single Fault Condition (High Line)	Mains Voltage 264 VAC/60 Hz	435	600	µA
AC Leakage Current (Input to Earth Ground) — Low Leakage Variant				
Normal Condition (High Line)	Mains Voltage 264 VAC/60 Hz	—	150	µA
Single Fault Condition (High Line)	Mains Voltage 264 VAC/60 Hz	—	300	µA
Touch Current				
Normal Condition	Mains Voltage 264 VAC/60 Hz	14.2	100	µA
Single Fault Condition	Mains Voltage 264 VAC/60 Hz	246	500	µA

EMC		
Parameter	**Conditions/Description**	**Criteria**
Radiated Emissions[1]	EN 55011, EN 55022 and FCC, Class B	Compliant
Conducted Emissions[2]	EN 55011, EN 55022 and FCC, Class B	Compliant
Power Line Harmonics	EN 61000-3-2, Class A	Compliant
Voltage Flicker	EN 61000-3-3	Compliant
ESD	EN 61000-4-2, level 4, 8 kV contact, 15 kV air	A
Radiated Immunity	EN 61000-4-3, level 3, 10 V/m 80-2700 MHz	A
Electrical Fast Transient	EN 61000-4-4, level 4, ±4 kV	A
Surge Immunity	EN 61000-4-5, level 4, 2 kV DM, 4 kV CM	A
Conducted RF Immunity	EN 61000-4-6, level 3, 10 Vemf, 150 KHz-80 MHz	A
Power Frequency Magnetic Field	EN 61000-4-8, level 4, 30 A/m	A
Voltage Dips and Interruptions	EN61000-4-11 10 ms 100 ms 500 ms	 A B B

[1] Consult AE applications for system level compliance
[2] Low leakage option – Class A

Standards and Directives	
Standard	**Conditions/Description**
Safety Agency Approvals	EN60601-1 3rd Edition, UL60601-1, CSA601, EN60950 2nd Edition, CSA C22.2 No. 60950-1
IEC/EN 60950-1, Edition 2	UL 60950-1/CSA 22.2 No 60950-1, Edition 2; 5,000 m (16,400 ft) altitude, 100 VAC to 240 VAC ±10%
IEC/EN 60601-1, Edition 3	IEC 60601-1 (2005), EN60601-1 (2006), ANSI/AAMI ES 60601-1 (2005), CAN/CSA C22.2 No. 60601-1 (2008); 5,000 m (16,400 ft) altitude, 100 VAC to 240 VAC ±10%
IEC 62368 Edition 2	IEC 62368-1 (2014) Edition 2; 5,000 m (16,400 ft) altitude, 100 VAC to 240 VAC ±10%
IEC 60601-1-2 Edition 4	IEC 60601-1-2 (2014)
Protection class	Class I
ROHS	EU DIRECTIVE 2015/863 RoHS compliant
REACH-171	Compliant
Conflict Materials	Compliant with Conflict Free Sourcing Initiative

Downloaded from Arrow.com.

MECHANICAL SPECIFICATIONS

Mechanica Data		
Parameter	**Description**	
Dimensions (L x W x H)	L x W x H	267 mm x 127 mm x 41 mm (10.5" x 5" x 1U)
Weight	Nominal Weight: CoolPac + 6 x CoolMods	1.6 Kg
Connectors	**Description**	**Mating Connectors (if applicable)**
AC/DC IEC input (Option)	Screw terminal Block and IEC inlet options.	—
Main DC output terminal block (CmA-CmF, CmM-CmQ)	M4 Screws	—
Main DC output terminal block (CmG, CmH)	Camden - CTB9350/4A	Camden - CTB9200/4A or Würth Elektronik - 691 352 710 004
System Signal Connector J1007	Molex 87833-0831 8-way	Locking Molex 51110-0860; Non Locking Molex 51110-0850; Crimp Terminal: Molex p/n 50394 or Molex 51110-0856 which includes locking tab and polarization keying
Output Signal Connectors J1001-1006	Molex 87833-0631 6-way	Locking Molex 51110-0660; Non Locking Molex 51110-0650; Crimp Terminal: Molex p/n 50394 or Molex 51110-0656 which includes locking tab and polarization keying
Output Signal Connector (CmG, CmH)	Molex 87833-0831 8-way	Locking Molex 51110-0860; Non Locking Molex 51110-0850 Crimp Terminal: Molex p/n 50394 or Molex 51110-0856 which includes locking tab and polarization keying
Output Sense Connectors J3	JST-S2BPH-K(LF)(SN)	JST PHR2. Crimp Terminal JST BPH-002TP.0.5S or SPH-002T-P.05S
Auxiliary Output Connector J1	Molex 1041880210 2pin	—

Downloaded from Arrow.com.

MECHANICAL SPECIFICATIONS (CONTINUED)

Mechanical Drawings

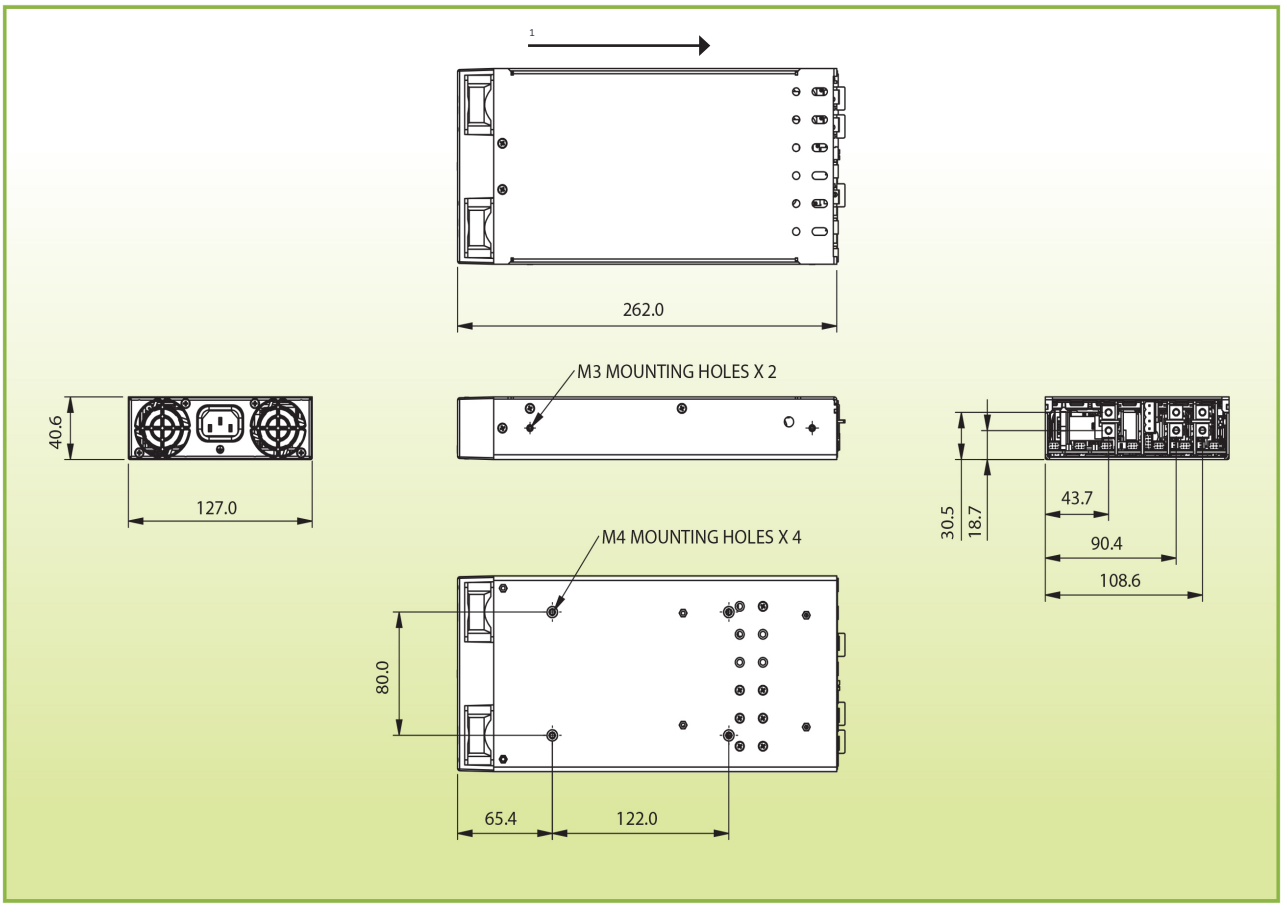

[1] Standard airflow direction
* Maximum screw penetration from base does not exceed 1.5 mm.

Downloaded from Arrow.com.

EFFICIENCY AND DERATING CURVES

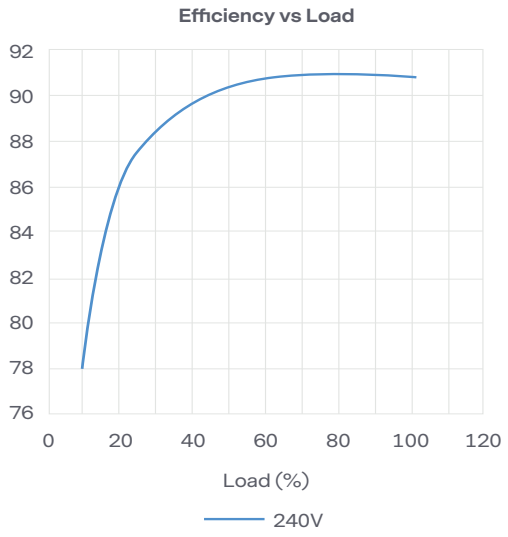

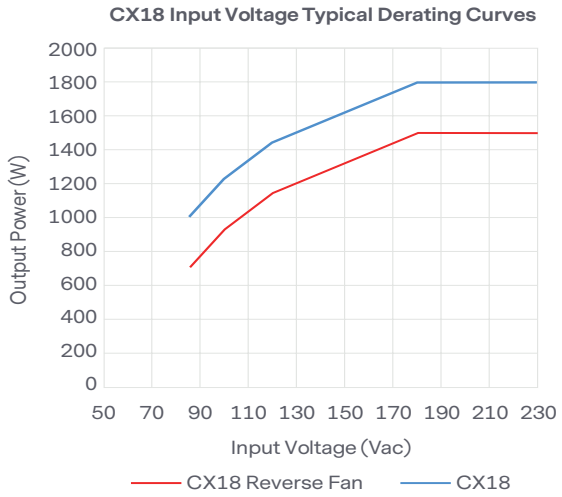

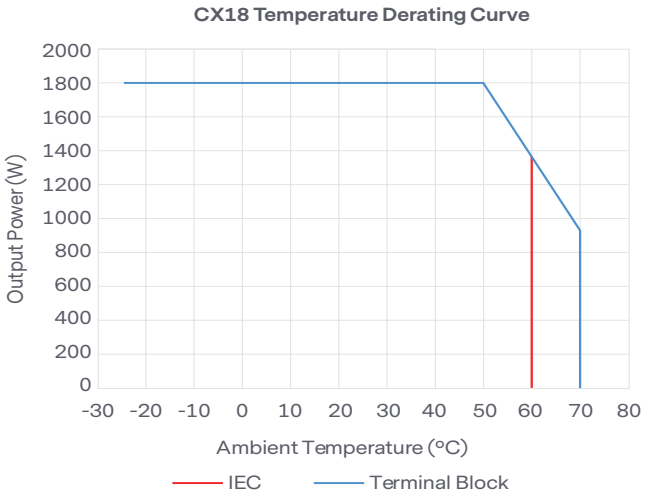

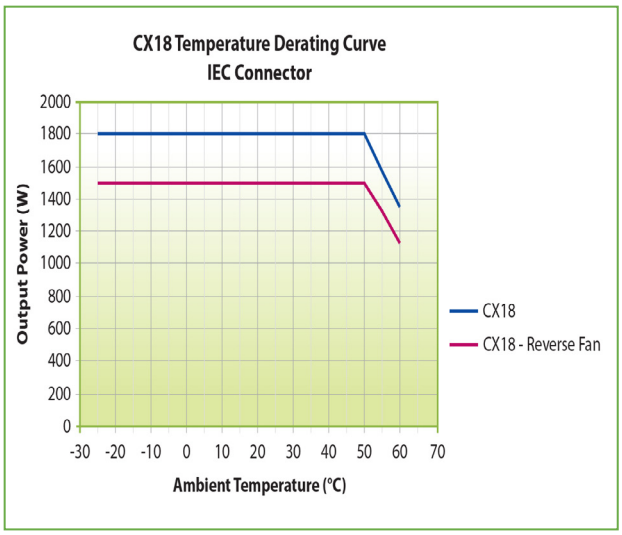

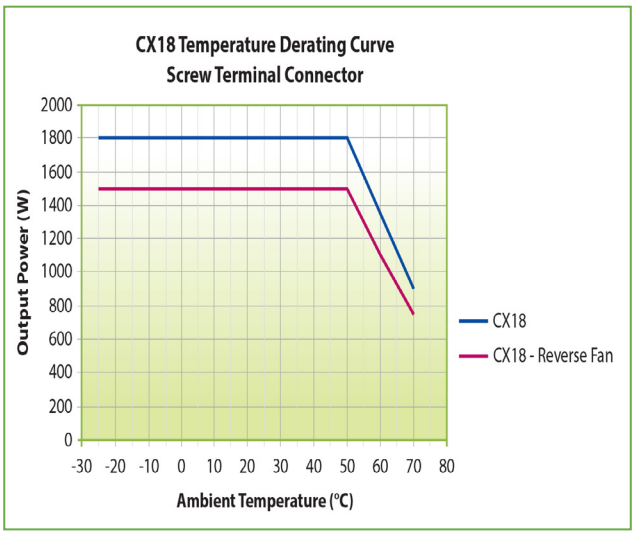

Downloaded from Arrow.com.

INTERFACE

Input Connectors

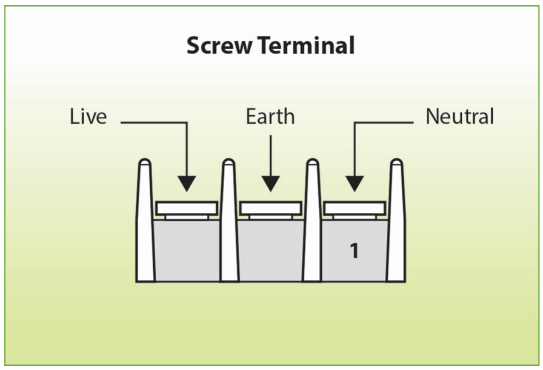

Standard (Screw Terminal)

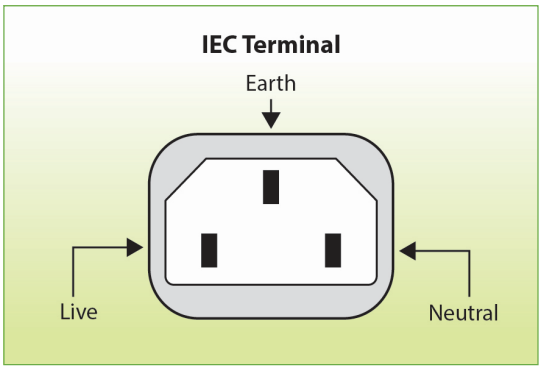

Option 1 (IEC Terminal)

CoolPac Connectors

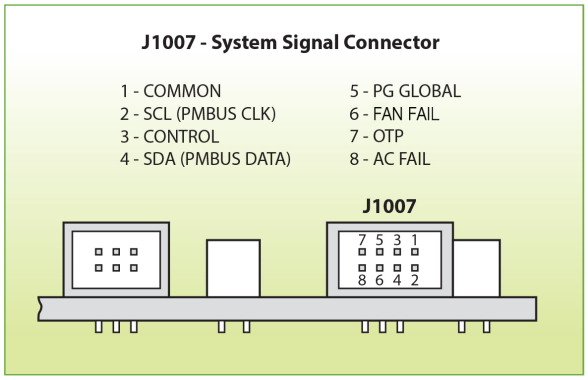

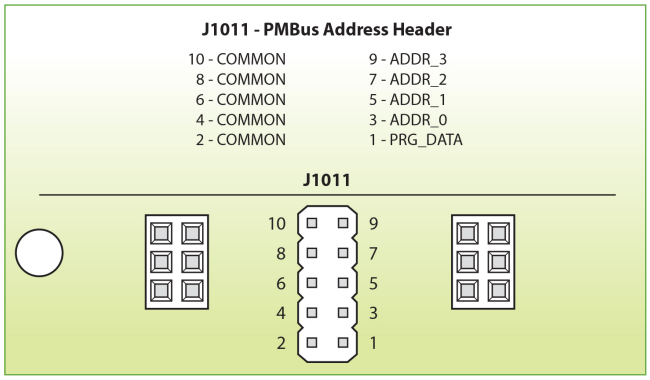

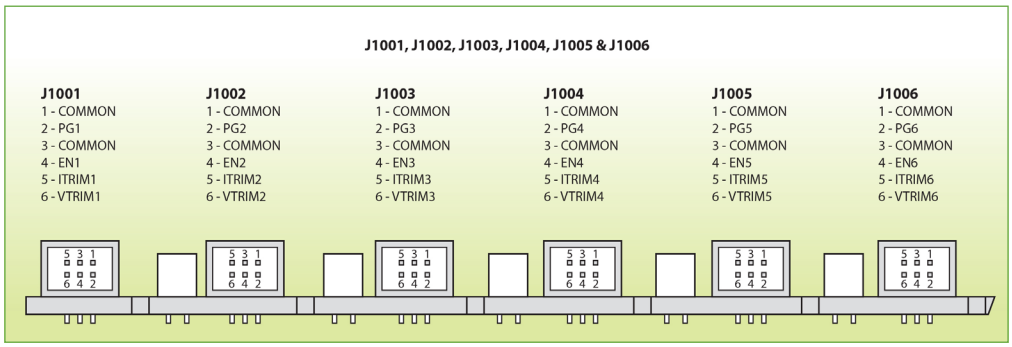

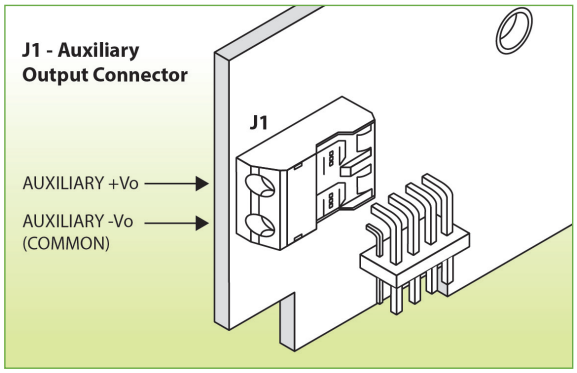

Downloaded from Arrow.com.

INTERFACE (CONTINUED)

CoolMod Connectors

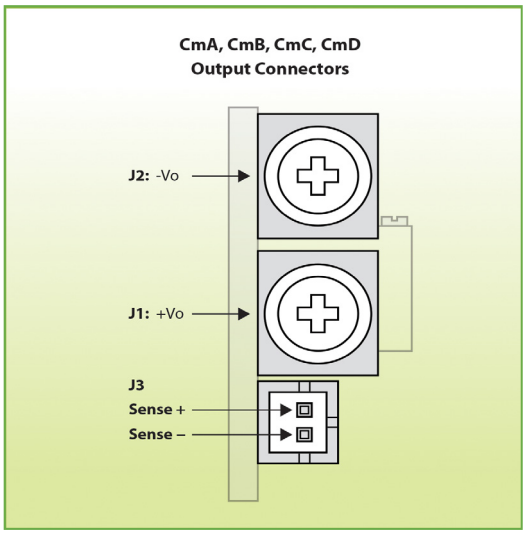

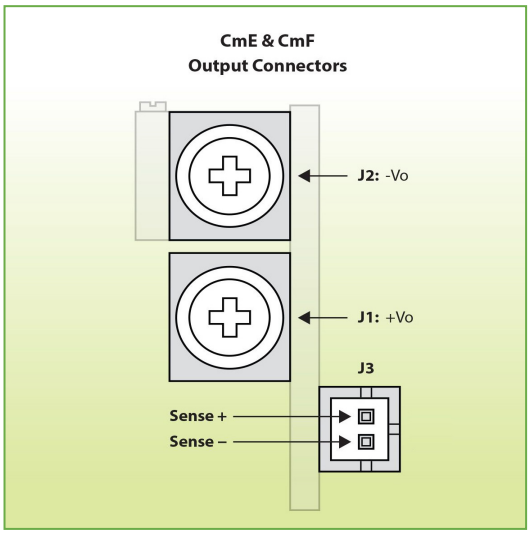

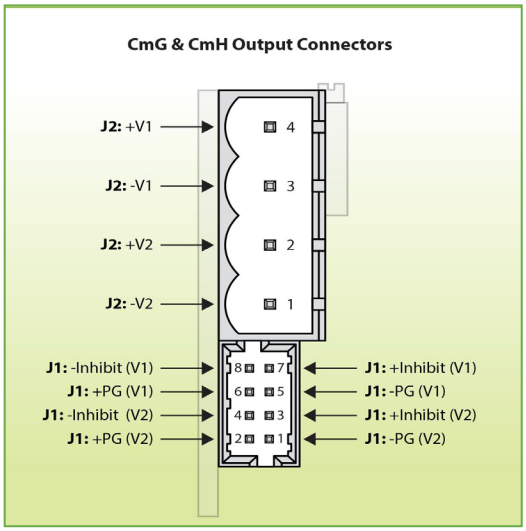

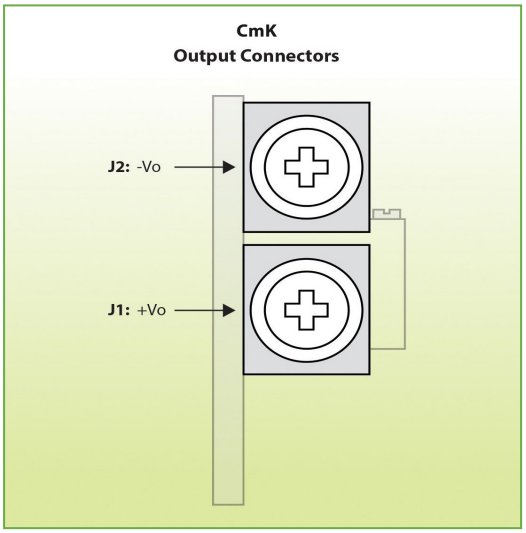

Downloaded from Arrow.com.

CONFIGURATION

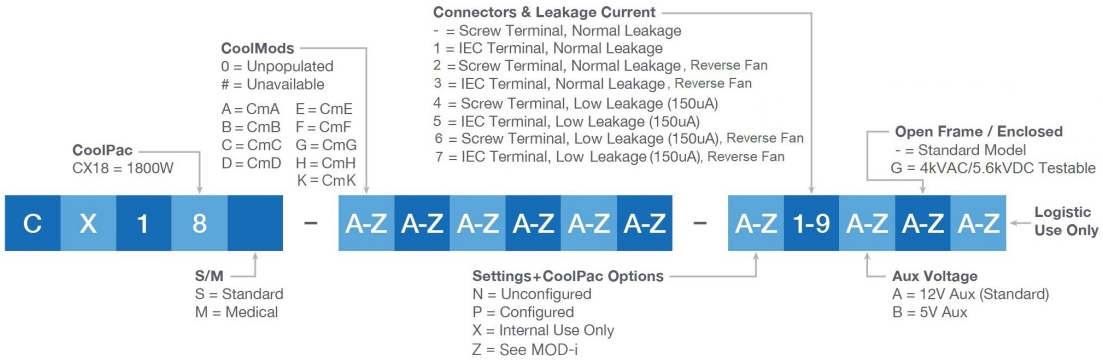

*CmE or CmF High Power Module (3 slot module) can only occupy Slots D/E/F.

Configuration Example 1
CoolX part number CX18S-ADG##E-N-A specifies the following product;
- CX18S 1800W IEC62368 approved
- Slot 1: CmA: 2.5-6.0 V (150 W)
- Slot 2: CmD: 28-58 V (300 W)
- Slot 3: CmG: Dual output 3-30 V (120 per channel)
- Slot 4: Not Available (CmE is three slot CoolMod module)
- Slot 5: Not Available (CmE is three slot CoolMod module)
- Slot 6: CmE: 22.8-25.2 V (900 W)
- Option N: Nominal Output voltage settings
- Option A: 12 V/(1.96 A) Bias Supply Voltage

Configuration Example 2
CoolX part number CX18M-BABBDC-N-B specifies the following product;
- CX18M 1800W IEC60601-1 approved
- Slot 1: CmB: 6-15 V (280 W)
- Slot 2: CmA: 2.5-6.0 V (150 W)
- Slot 3: CmB: 6-15 V (280 W)
- Slot 4: CmB: 6-15 V (280 W)
- Slot 5: CmD: 28-58 V (300 W)
- Slot 6: CmC: 15-28 V (300 W)
- Option N: Nominal Output voltage setting
- Option B: 5 V/(4.7 A) Nominal Output voltage setting

Downloaded from Arrow.com.

ABOUT ADVANCED ENERGY

Advanced Energy (AE) has devoted more than four decades to perfecting power for its global customers. AE designs and manufactures highly engineered, precision power conversion, measurement and control solutions for mission-critical applications and processes.

AE's power solutions enable customer innovation in complex semiconductor and industrial thin film plasma manufacturing processes, demanding high and low voltage applications, and temperature-critical thermal processes.

With deep applications know-how and responsive service and support across the globe, AE builds collaborative partnerships to meet rapid technological developments, propel growth for its customers and power the future of technology.

PRECISION | POWER | PERFORMANCE | TRUST

For international contact information,
visit advancedenergy.com.

powersales@aei.com (sales support)
productsupport.ep@aei.com (technical support)
+1 888 412 7832

Specifications are subject to change without notice. Not responsible for errors or omissions. ©2026 Advanced Energy Industries, Inc. All rights reserved. Advanced Energy® and AE® are U.S. trademarks of Advanced Energy Industries, Inc.

ENG-LV-COOLX1800-235-15 07.07.26

Downloaded from Arrow.com.