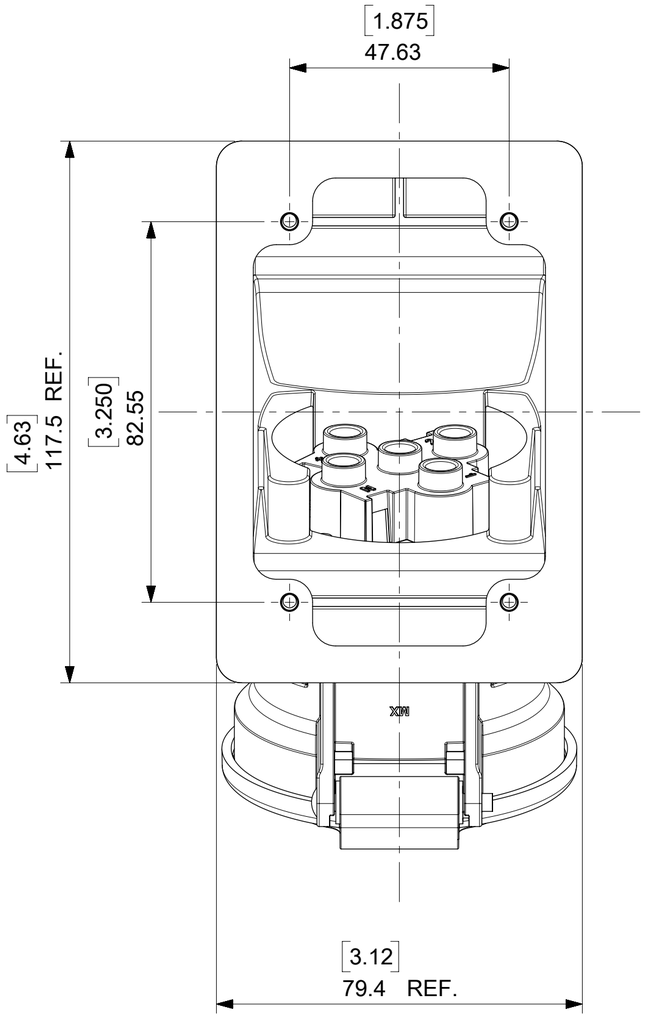

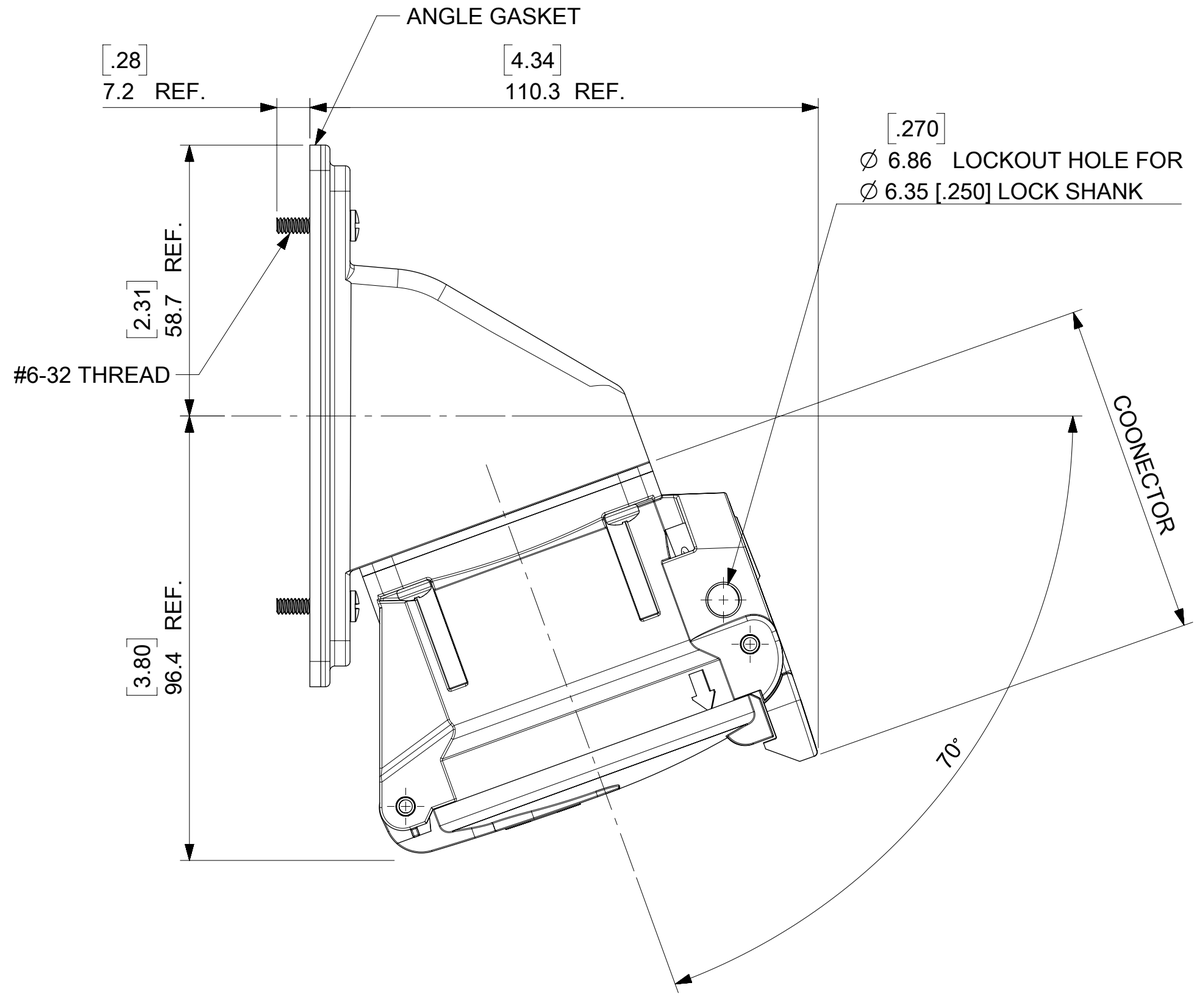

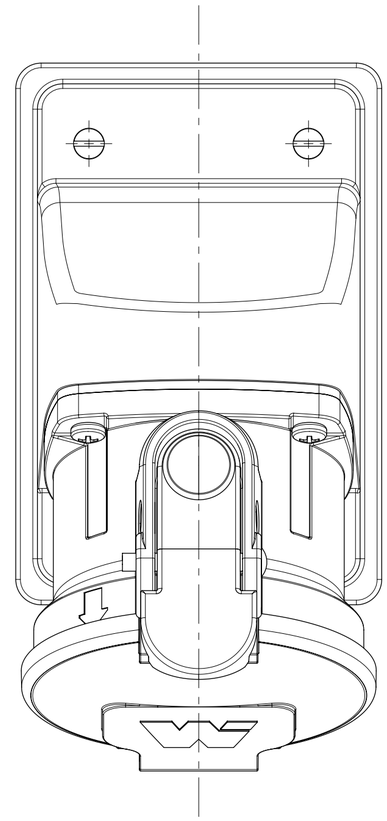

ARC30FAE03 SHOWN

MATERIAL NUMBER	ENGINEERING NUMBER	DESCRIPTION	INSULATOR KEYING POSITION	HORSEPOWER RATING
1122190043	ARC30FAA01	ARC 30A FA 125VAC 1P+N+G	7	1 HP
1122190044	ARC30FAB02	ARC 30A FA 250VAC 2P+G		3 HP
1122190045	ARC30FAB03	ARC 30A FA 250VAC 3P+G		5 HP
1122190046	ARC30FAAB04	ARC 30A FA 125/250VAC 2P+N+G		NA
1122190047	ARC30FAC02	ARC 30A FA 208VAC 2P+G	16	NA
1122190048	ARC30FAC03	ARC 30A FA 208VAC 3P+G		5 HP
1122190049	ARC30FAAC05	ARC 30A FA 120/208VAC 3P+N+G		NA
1122190050	ARC30FAD01	ARC 30A FA 277VAC 1P+N+G	4	NA
1122190051	ARC30FAE02	ARC 30A FA 480VAC 2P+G		NA
1122190052	ARC30FAE03	ARC 30A FA 480VAC 3P+G		10 HP
1122190053	ARC30FADE05	ARC 30A FA 277/480VAC 3P+N+G		NA
1122190054	ARC30FAF02	ARC 30A FA 600VAC 2P+G	14	NA
1122190055	ARC30FAF03	ARC 30A FA 600VAC 3P+G		NA
1122190056	ARC30FAGF05	ARC 30A FA 347/600VAC 3P+N+G		NA

NOTES:

MATERIALS:
- ANGLE, HOUSINGS AND INSULATORS: GLASS FILLED PBT
- CONTACTS: COPPER ALLOY WITH A SILVER NICKEL TIP, SILVER PLATED
- MOUNTING AND INTERFACE GASKETS: SILICONE
- SELF TAPPING SCREWS (PHILLIPS) - STAINLESS STEEL
- ANGLE MOUNTING SCREWS (SLOTTED) - STAINLESS STEEL
- ANGLE GASKET - EPDM

RATINGS:
- CURRENT: 30 AMPS
- VOLTAGE AND HORSEPOWER: SEE TABLE
- OPERATING TEMPERATURE: -25°C (-13°F) TO 60°C (140°F)
- ENVIRONMENTAL: TYPE 4X, IP69K
- WIRING CAPACITY: 12 AWG MIN. TO 8 AWG MAX.
- TORQUE TERMINAL SCREWS TO 1.7 N-M (15 in/lbs)
- AGENCY: UL LISTING PENDING
  - SWITCH RATED RECEPTACLE/CONNECTOR
  - BRANCH CIRCUIT DISCONNECT SWITCH
  - MOTOR CIRCUIT DISCONNECT SWITCH IF HP RATED

CONNECTOR AND HANDLE ARE PACKAGED AS SUB-ASSEMBLIES AND WILL REQUIRE END USER ASSEMBLY.

THIS DRAWING CONTAINS INFORMATION THAT IS PROPRIETARY TO MOLEX ELECTRONIC TECHNOLOGIES, LLC AND SHOULD NOT BE USED WITHOUT WRITTEN PERMISSION

SYMBOLS: = 0

DIMENSION UNITS: INCH | SCALE: 1:1

GENERAL TOLERANCES (UNLESS SPECIFIED)

	MM	INCH
4 PLACES	±	±
3 PLACES	±	±
2 PLACES	±	±
1 PLACE	±	±
0 PLACES	±	±
ANGULAR TOL	± °	

DRAFT WHERE APPLICABLE MUST REMAIN WITHIN DIMENSIONS

CURRENT REV DESC: ADDED 10HP,NEW NOTES

EC NO: 604773
DRWN: MJANTELEZIO 2018/09/20
CHK'D: JFMURPHY 2018/11/05
APPR: JFMURPHY 2018/11/05

INITIAL REVISION:
DRWN: DRWN BY XXXX/XX/XX
APPR: APPR BY XXXX/XX/XX

THIRD ANGLE PROJECTION | DRAWING: C-SIZE | SERIES: 112219

molex

ARC 30A FA 480VAC 3P+G

PRODUCT CUSTOMER DRAWING

DOCUMENT NUMBER	DOC TYPE	DOC PART	REVISION
1122190052	PSD	000	A2

MATERIAL NUMBER | CUSTOMER: GENERAL MARKET | SHEET NUMBER: 1 OF 1

DOCUMENT STATUS	P1	RELEASE DATE	2018/11/05 17:31:29

Downloaded from Arrow.com.