AC-DC Power Supplies Open Frame

COSEL

Power Factor Correction | World wide | Safety Approvals | EMI | Inrush current limiting | OCP | OVP | Cost Effective | Rugged PCB type

LHA-series

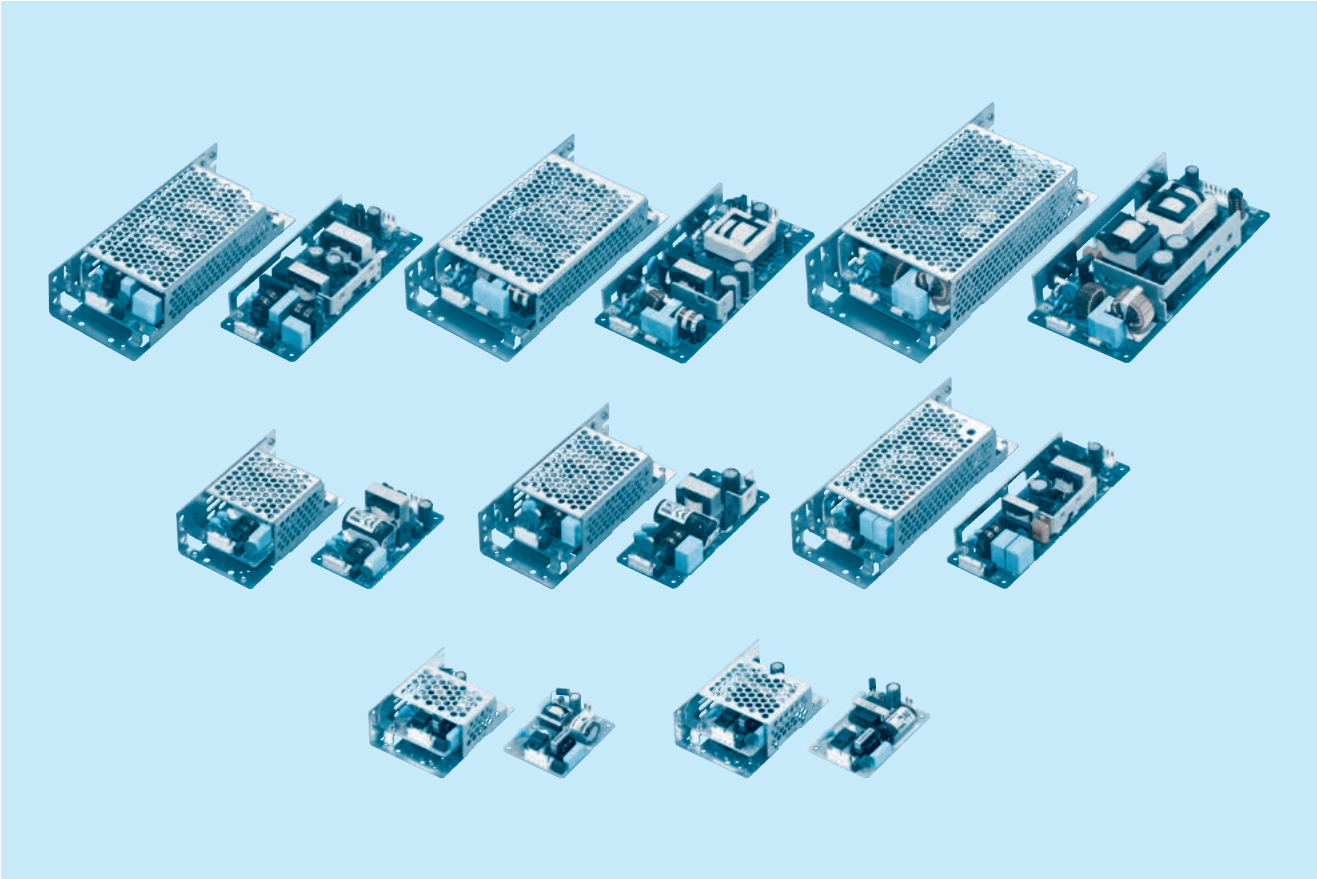

Feature

EN62477-1 (OVC III)
Low-profile
Small and compact PCB construction
High efficiency
Low noise
Harmonic attenuator (Complies with IEC61000-3-2)
Power factor correction (LHA75F-300F)
Universal input (85-264VAC)
Built-in inrush current, overcurrent and overvoltage protection circuits

Safety agency approvals

UL62368-1, C-UL (equivalent to CAN/CSA-C22.2 No.62368-1), EN62368-1
EN62477-1 (OVC III) : LHA150F, 300F
Complies with DEN-AN

5-year warranty (refer to Instruction Manual)

CE marking

Low Voltage Directive
RoHS Directive

UKCA marking

Electrical Equipment Safety Regulations
RoHS Regulations

EMI

Complies with FCC-B, CISPR11-B, CISPR32-B, EN55011-B, EN55032-B, VCCI-B

EMS Compliance : EN61204-3, EN61000-6-2

EN61000-4-2
EN61000-4-3
EN61000-4-4
EN61000-4-5
EN61000-4-6
EN61000-4-8
EN61000-4-11

Downloaded from Arrow.com.

COSEL AC-DC Power Supplies Open Frame

LHA10F

Ordering information

LH	A	10	F	-□□	-□
①	②	③	④	⑤	⑥

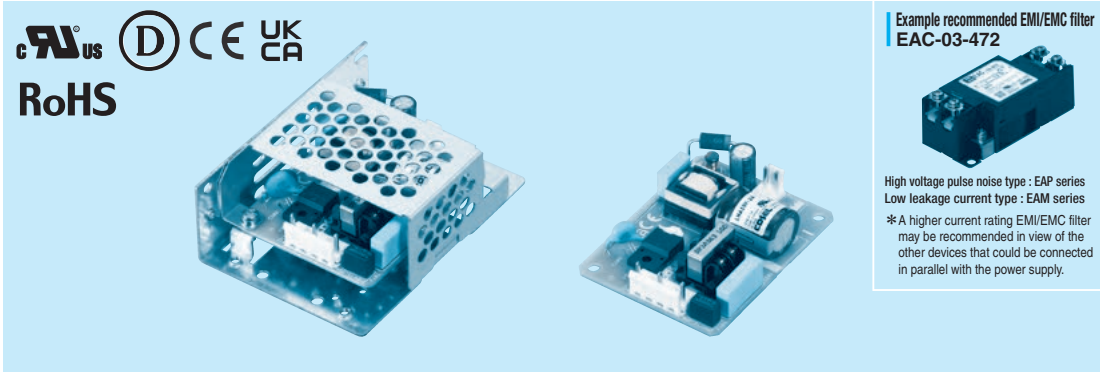

Example recommended EMI/EMC filter
EAC-03-472

High voltage pulse noise type : EAP series
Low leakage current type : EAM series

＊A higher current rating EMI/EMC filter may be recommended in view of the other devices that could be connected in parallel with the power supply.

①Series name
②Single output
③Output wattage
④Universal input
⑤Output voltage
⑥Optional ＊1
C : with Coating
J4 : EP (TE Connectivity) connector type
S : with Chassis
SN : with Chassis & cover
Y : with Potentiometer

For option details, refer to Instruction Manual 6.

This power supply is manufactured by SMD technology. The stress to PCB like twisting or bending causes the defect of the unit, so handle the unit with care.
＊Make sure necessary tests will be carried out on your end equipment with the power supply installed in accordance with any required EMC/EMI regulations.

MODEL	LHA10F-3R3-Y	LHA10F-5	LHA10F-12	LHA10F-15	LHA10F-24
MAX OUTPUT WATTAGE[W] ＊2	6.6	10	10.8	10.5	12
DC OUTPUT ＊2	3.3V 2A	5V 2A	12V 0.9A	15V 0.7A	24V 0.5A

SPECIFICATIONS

	MODEL		LHA10F-3R3-Y	LHA10F-5	LHA10F-12	LHA10F-15	LHA10F-24
INPUT	VOLTAGE[VAC] ＊2		85 - 264 1 ϕ (Refer to “Derating” and Instruction Manual 1.1)				
	CURRENT[A]	ACIN 100V	0.18typ	0.26typ			
		ACIN 230V	0.10typ	0.14typ			
	FREQUENCY[Hz]		50 / 60 (45 - 440)				
	EFFICIENCY[%]	ACIN 100V	72.0typ	77.0typ	79.5typ	81.0typ	82.5typ
		ACIN 230V	72.0typ	78.5typ	81.0typ	83.0typ	84.5typ
	INRUSH CURRENT[A]	ACIN 100V	15typ (Io=100%)				
		ACIN 230V	35typ (Io=100%)				
	LEAKAGE CURRENT[mA]		0.07 / 0.15max (ACIN 100V / 240V, 60Hz, Io=100%, According to IEC62368-1, and DEN-AN)				
OUTPUT	VOLTAGE[V]		3.3	5	12	15	24
	CURRENT[A] ＊2		2.0	2.0	0.9	0.7	0.5
	LINE REGULATION[mV] ＊3		20max	20max	48max	60max	96max
	LOAD REGULATION[mV] ＊3		40max	40max	100max	120max	150max
	RIPPLE[mVp-p] ＊4	0 to +60℃ ＊7	80max	80max	120max	120max	120max
		-10 to 0℃	140max	140max	160max	160max	160max
		Io=0 to 25%	300max	300max	300max	300max	300max
	RIPPLE NOISE[mVp-p] ＊4	0 to +60℃ ＊7	120max	120max	150max	150max	150max
		-10 to 0℃	160max	160max	180max	180max	180max
		Io=0 to 25%	360max	360max	360max	360max	360max
	TEMPERATURE REGULATION[mV]	0 to +60℃ ＊7	50max	50max	120max	150max	240max
		-10 to +60℃ ＊7	60max	60max	150max	180max	290max
	DRIFT[mV] ＊5		20max	20max	48max	60max	96max
	START-UP TIME[ms]		40typ (ACIN 100V, Io=100%)				
	HOLD-UP TIME[ms]		20typ (ACIN 100V, Io=100%) / 150typ (ACIN 230V, Io=100%)				
	OUTPUT VOLTAGE ADJUSTMENT RANGE[V]		2.85 to 3.63	Fixed (“Y”option is available for adjusting output voltage between ±10%)			
	OUTPUT VOLTAGE SETTING[V]		3.30 to 3.40	4.90 to 5.30	11.50 to 12.50	14.40 to 15.60	23.00 to 25.00
PROTECTION CIRCUIT AND OTHERS	OVERCURRENT PROTECTION		Works over 105% of rating and recovers automatically				
	OVERVOLTAGE PROTECTION		4.00 to 6.00	5.75 to 8.00	13.80 to 18.00	17.25 to 23.30	27.60 to 34.50
	OPERATING INDICATION		Not provided				
	REMOTE SENSING		Not provided				
ISOLATION	INPUT-OUTPUT		AC3,000V 1minute, Cutoff current = 10mA, DC500V 100MΩ min (At Room Temperature)				
	INPUT-FG		AC2,000V 1minute, Cutoff current = 10mA, DC500V 100MΩ min (At Room Temperature)				
	OUTPUT-FG		AC500V 1minute, Cutoff current = 25mA, DC500V 100MΩ min (At Room Temperature)				
ENVIRONMENT	OPERATING TEMP.,HUMID.AND ALTITUDE ＊2		-10 to +70℃, 20 - 90%RH (Non condensing), 5,000m (16,500feet) max				
	STORAGE TEMP.,HUMID.AND ALTITUDE		-20 to +75℃, 20 - 90%RH (Non condensing), 9,000m (30,000feet) max				
	VIBRATION		10 - 55Hz, 19.6m/s² (2G), 3minutes period, 60minutes each along X, Y and Z axis				
	IMPACT		196.1m/s² (20G), 11ms, once each X, Y and Z axis				
SAFETY AND NOISE REGULATIONS	AGENCY APPROVALS		UL62368-1, C-UL (equivalent to CAN/CSA-C22.2No.62368-1), EN62368-1, Complies with DEN-AN				
	CONDUCTED NOISE		Complies with FCC-B, VCCI-B, CISPR11-B, CISPR32-B, EN55011-B, EN55032-B				
	HARMONIC ATTENUATOR ＊6		Complies with IEC61000-3-2 (Class A) (No built-in power factor correction)				
OTHERS	CASE SIZE/WEIGHT		50×21.5×62.5mm [1.97×0.85×2.46 inches] (W×H×D) / 45g max				
	COOLING METHOD ＊2		Convection/Forced air (Requires external fan) (Refer to “Derating”)				

＊1 The listed options may affect the published standard specifications. Please contact us for detailed product specifications.
＊2 Derating is required.
＊3 At low load conditions, the burst mode operation will start. To check load regulation, you will need to measure the characteristics at average mode with instruments.
＊4 This is the value that measured on measuring board with capacitor of 22μF and 0.1μF at 150mm from output terminal. Measured by 20MHz oscilloscope or Ripple-Noise meter (Equivalent to KEISOKU-GIKEN:RM104).
Ripple and ripple noise spec is change at Io=0 to 25% by burst operation.
Audible noise may be generated.
＊5 Drift is the change in DC output for an eight hour period after a half-hour warm-up at 25℃, with the input voltage held constant at the rated input/output.
＊6 Please contact us about another class. When two or more units are operating it may not comply with the IEC61000-3-2. Please contact us for details.
＊7 3.3V, 5V, 12V output product, the maximum temperature of 55℃.
＊ To meet the specification, do not operate overload condition.
＊ Parallel operation is not possible.
＊ Sound noise may be generated by power supply in case of pulse load.

Downloaded from Arrow.com.

Block diagram

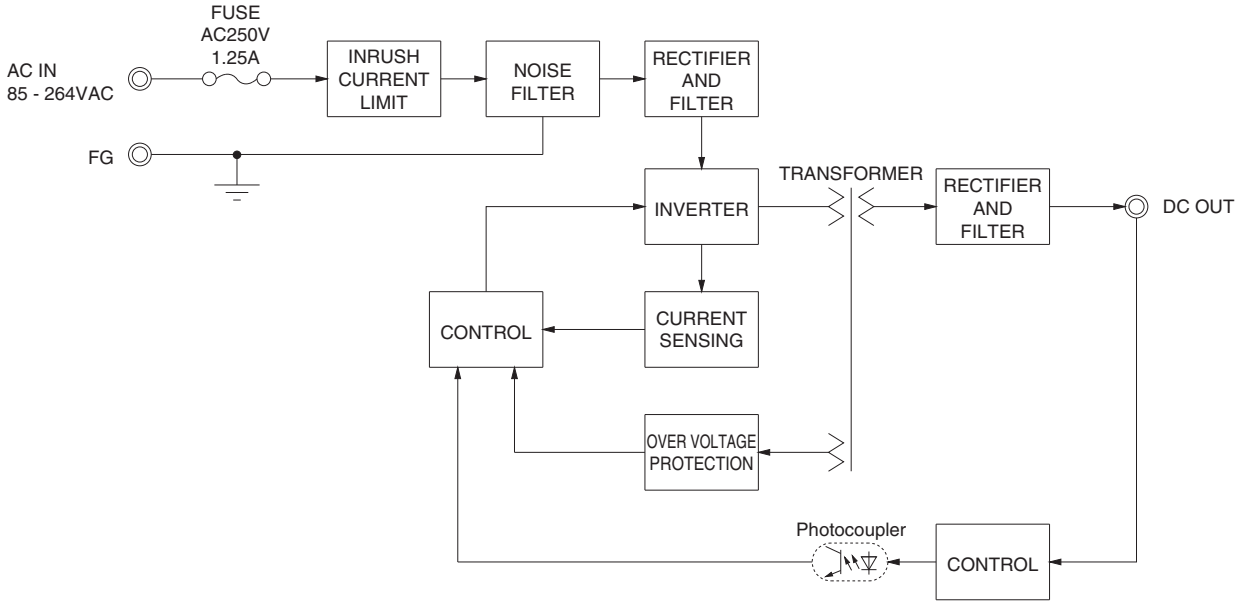

External view

※ External size of option is different from standard type.

Standard type

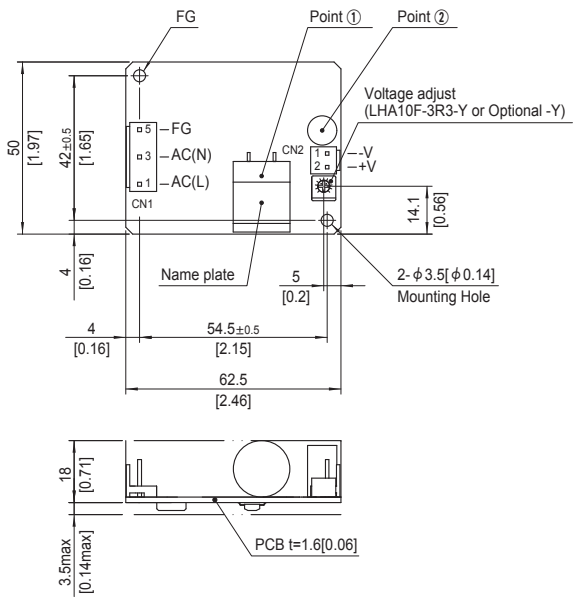

Chassis and cover type

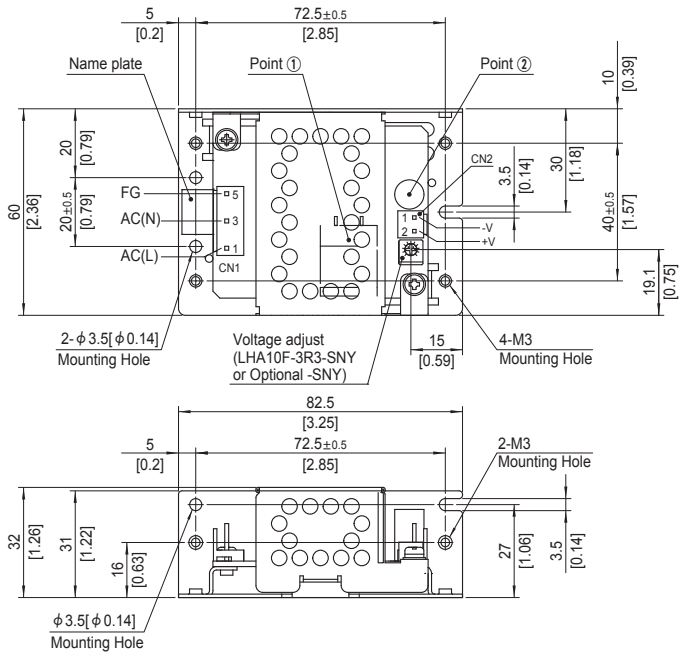

※ The back side of PCB of the power supply is assembled some SMDs.
Be careful not to bump against the attached area by vibration.
※ Use the spacer of 8mm [0.31] length or more for isolation.
And do not use press-fitting bush.
※ Point ①, Point ② are thermometry points. Please refer to Instruction Manual 3.

I/O Connector		Mating connector	Terminal	
CN1	B3P5-VH	VHR-5N	Chain	SVH-21T-P1.1
			Loose	BVH-21T-P1.1
CN2	B2P-VH	VHR-2N	Chain	SVH-21T-P1.1
			Loose	BVH-21T-P1.1

(Mfr: J.S.T.)

※ I/O Connector is Mfr.J.S.T.
※ Option:-J4:EP (TE Connectivity) connector type.

CN1

Pin No.	Input
1	AC(L)
2	
3	AC(N)
4	
5	FG

CN2

Pin No.	Output
1	-V
2	+V

※ Pin No.2 and 4 is NC at CN1.

※ Dimensions in mm, [ ]=inches
※ Tolerance : ±1 [±0.04]
※ Weight : 45g max (with chassis and cover : 115g max)
※ PCB Material / thickness : CEM-3 / 1.6mm [0.06]
※ Optional chassis and cover material : Galvanizing steel board
※ Mounting torque (Mounting hole of chassis) : 1.5N・m max

Downloaded from Arrow.com.

COSEL AC-DC Power Supplies Open Frame

LHA15F

Ordering information

LH	A	15	F	-□□	-□
①	②	③	④	⑤	⑥

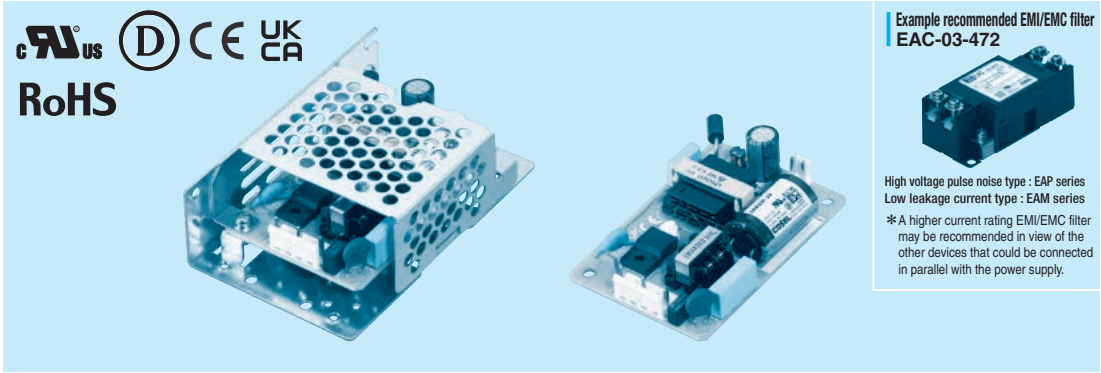

Example recommended EMI/EMC filter
EAC-03-472

High voltage pulse noise type : EAP series
Low leakage current type : EAM series

＊A higher current rating EMI/EMC filter may be recommended in view of the other devices that could be connected in parallel with the power supply.

①Series name
②Single output
③Output wattage
④Universal input
⑤Output voltage
⑥Optional ＊1
C : with Coating
J4 : EP (TE Connectivity) connector type
S : with Chassis
SN : with Chassis & cover
Y : with Potentiometer

For option details, refer to Instruction Manual 6.

This power supply is manufactured by SMD technology. The stress to PCB like twisting or bending causes the defect of the unit, so handle the unit with care.
＊Make sure necessary tests will be carried out on your end equipment with the power supply installed in accordance with any required EMC/EMI regulations.

MODEL	LHA15F-3R3-Y	LHA15F-5	LHA15F-12	LHA15F-15	LHA15F-24
MAX OUTPUT WATTAGE[W] ＊2	9.9	15	15.6	15	16.8
DC OUTPUT ＊2	3.3V 3A	5V 3A	12V 1.3A	15V 1.0	24V 0.7A

SPECIFICATIONS

	MODEL		LHA15F-3R3-Y	LHA15F-5	LHA15F-12	LHA15F-15	LHA15F-24
INPUT	VOLTAGE[VAC] ＊2		85 - 264 1 ϕ (Refer to "Derating" and Instruction Manual 1.1)				
	CURRENT[A]	ACIN 100V	0.24typ	0.35typ			
		ACIN 230V	0.15typ	0.19typ			
	FREQUENCY[Hz]		50 / 60 (45 - 440)				
	EFFICIENCY[%]	ACIN 100V	71.5typ	75.0typ	79.0typ	80.0typ	81.5typ
		ACIN 230V	72.5typ	77.0typ	82.0typ	83.0typ	84.5typ
	INRUSH CURRENT[A]	ACIN 100V	15typ (Io=100%) Ta=25℃ at cold start				
		ACIN 230V	35typ (Io=100%) Ta=25℃ at cold start				
	LEAKAGE CURRENT[mA]		0.05 / 0.10max (ACIN 100V / 240V, 60Hz, Io=100%, According to IEC62368-1, and DEN-AN)				
OUTPUT	VOLTAGE[V]		3.3	5	12	15	24
	CURRENT[A] ＊2		3.0	3.0	1.3	1.0	0.7
	LINE REGULATION[mV] ＊3		20max	20max	48max	60max	96max
	LOAD REGULATION[mV] ＊3		40max	40max	100max	120max	150max
	RIPPLE[mVp-p] ＊4	0 to +60℃ ＊7	80max	80max	120max	120max	120max
		-10 to 0℃	140max	140max	160max	160max	160max
		Io=0 to 25%	300max	300max	300max	300max	300max
	RIPPLE NOISE[mVp-p] ＊4	0 to +60℃ ＊7	120max	120max	150max	150max	150max
		-10 to 0℃	160max	160max	180max	180max	180max
		Io=0 to 25%	360max	360max	360max	360max	360max
	TEMPERATURE REGULATION[mV]	0 to +60℃ ＊7	50max	50max	120max	150max	240max
		-10 to +60℃ ＊7	60max	60max	150max	180max	290max
	DRIFT[mV] ＊5		20max	20max	48max	60max	96max
	START-UP TIME[ms]		40typ (ACIN 100V, Io=100%)				
	HOLD-UP TIME[ms]		20typ (ACIN 100V, Io=100%) / 150typ (ACIN 230V, Io=100%)				
	OUTPUT VOLTAGE ADJUSTMENT RANGE[V]		2.85 to 3.63	Fixed ("Y"option is available for adjusting output voltage between ±10%)			
	OUTPUT VOLTAGE SETTING[V]		3.30 to 3.40	4.90 to 5.30	11.50 to 12.50	14.40 to 15.60	23.00 to 25.00
PROTECTION CIRCUIT AND OTHERS	OVERCURRENT PROTECTION		Works over 105% of rating and recovers automatically				
	OVERVOLTAGE PROTECTION		4.00 to 6.00	5.75 to 8.00	13.80 to 18.00	17.25 to 23.30	27.60 to 34.50
	OPERATING INDICATION		Not provided				
	REMOTE SENSING		Not provided				
ISOLATION	INPUT-OUTPUT		AC3,000V 1minute, Cutoff current = 10mA, DC500V 100MΩ min (At Room Temperature)				
	INPUT-FG		AC2,000V 1minute, Cutoff current = 10mA, DC500V 100MΩ min (At Room Temperature)				
	OUTPUT-FG		AC500V 1minute, Cutoff current = 25mA, DC500V 100MΩ min (At Room Temperature)				
ENVIRONMENT	OPERATING TEMP.,HUMID.AND ALTITUDE ＊2		-10 to +70℃, 20 - 90%RH (Non condensing), 5,000m (16,500feet) max				
	STORAGE TEMP.,HUMID.AND ALTITUDE		-20 to +75℃, 20 - 90%RH (Non condensing), 9,000m (30,000feet) max				
	VIBRATION		10 - 55Hz, 19.6m/s² (2G), 3minutes period, 60minutes each along X, Y and Z axis				
	IMPACT		196.1m/s² (20G), 11ms, once each X, Y and Z axis				
SAFETY AND NOISE REGULATIONS	AGENCY APPROVALS		UL62368-1, C-UL (equivalent to CAN/CSA-C22.2No.62368-1), EN62368-1, Complies with DEN-AN				
	CONDUCTED NOISE		Complies with FCC-B, VCCI-B, CISPR11-B, CISPR32-B, EN55011-B, EN55032-B				
	HARMONIC ATTENUATOR ＊6		Complies with IEC61000-3-2 (Class A) (No built-in power factor correction)				
OTHERS	CASE SIZE/WEIGHT		50×21.5×73.5mm [1.97×0.85×2.89 inches] (W×H×D) / 60g max				
	COOLING METHOD ＊2		Convection/Forced air (Requires external fan) (Refer to "Derating")				

＊1 The listed options may affect the published standard specifications. Please contact us for detailed product specifications.
＊2 Derating is required.
＊3 At low load conditions, the burst mode operation will start. To check load regulation, you will need to measure the characteristics at average mode with instruments.
＊4 This is the value that measured on measuring board with capacitor of 22 μF and 0.1 μF at 150mm from output terminal. Measured by 20MHz oscilloscope or Ripple-Noise meter (Equivalent to KEISOKU-GIKEN:RM104).
Ripple and ripple noise spec is change at Io=0 to 25% by burst operation.
Audible noise may be generated.
＊5 Drift is the change in DC output for an eight hour period after a half-hour warm-up at 25℃, with the input voltage held constant at the rated input/output.
＊6 Please contact us about another class. When two or more units are operating it may not comply with the IEC61000-3-2. Please contact us for details.
＊7 3.3V, 5V, 12V output product, the maximum temperature of 55℃.
＊ To meet the specification, do not operate overload condition.
＊ Parallel operation is not possible.
＊ Sound noise may be generated by power supply in case of pulse load.

Downloaded from Arrow.com.

Block diagram

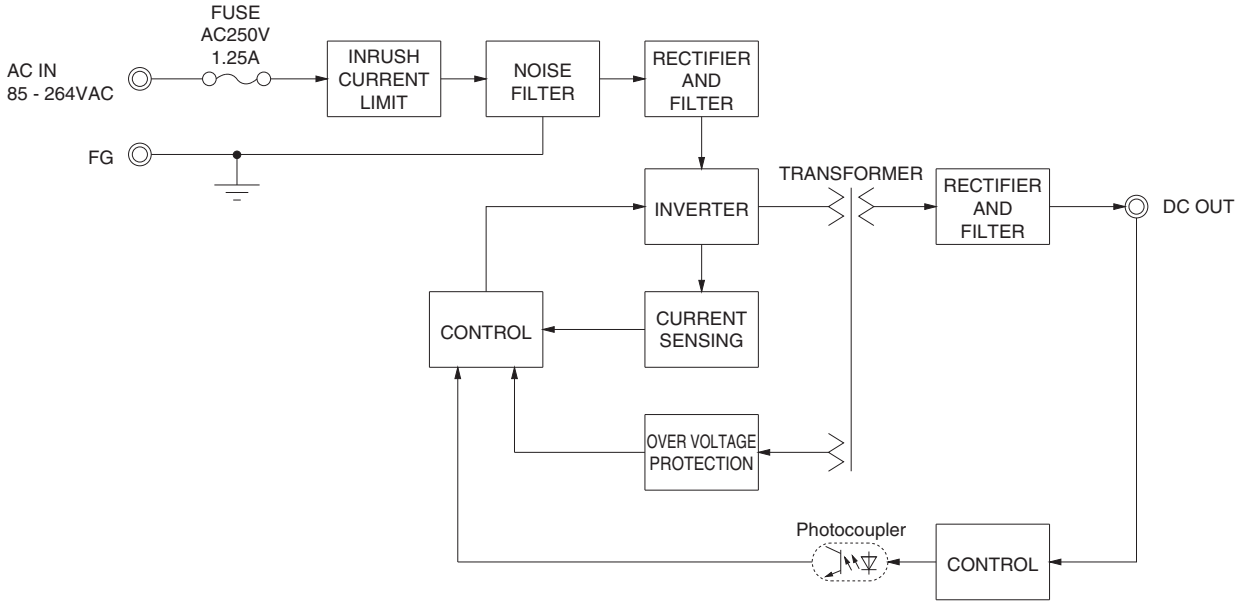

External view

※ External size of option is different from standard type.

Standard type

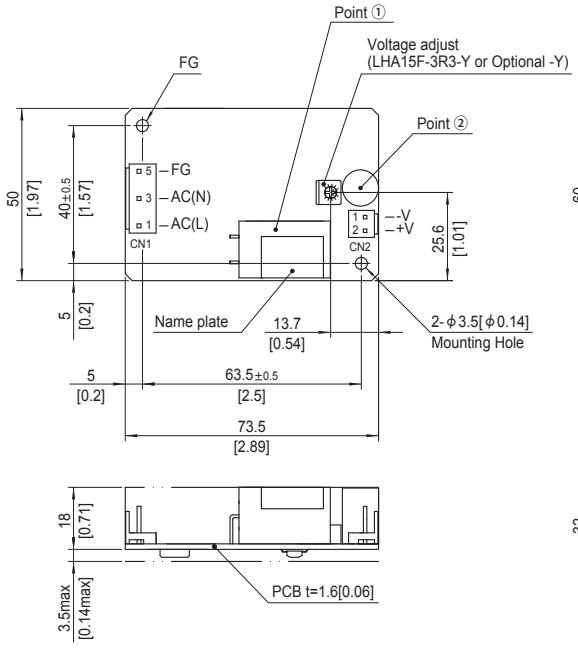

Chassis and cover type

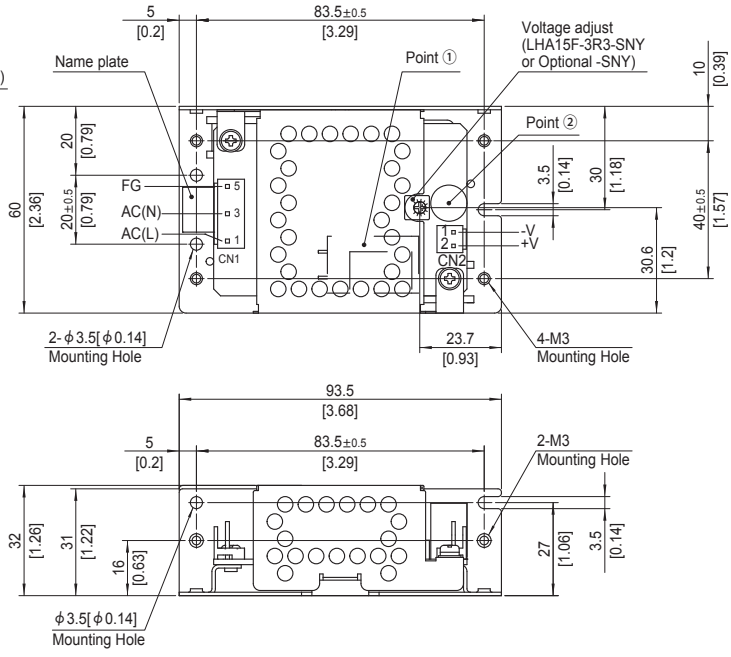

※ The back side of PCB of the power supply is assembled some SMDs.
Be careful not to bump against the attached area by vibration.
※ Use the spacer of 8mm [0.31] length or more for isolation.
And do not use press-fitting bush.
※ Point ①, Point ② are thermometry points. Please refer to Instruction Manual 3.

I/O Connector		Mating connector	Terminal	
CN1	B3P5-VH	VHR-5N	Chain	SVH-21T-P1.1
			Loose	BVH-21T-P1.1
CN2	B2P-VH	VHR-2N	Chain	SVH-21T-P1.1
			Loose	BVH-21T-P1.1

(Mfr: J.S.T.)

※ I/O Connector is Mfr.J.S.T.
※ Option:-J4:EP (TE Connectivity) connector type.

CN1

Pin No.	Input
1	AC(L)
2	
3	AC(N)
4	
5	FG

CN2

Pin No.	Output
1	-V
2	+V

※ Pin No.2 and 4 is NC at CN1.

※ Dimensions in mm, [ ]=inches
※ Tolerance : ±1 [±0.04]
※ Weight : 60g max (with chassis and cover : 140g max)
※ PCB Material / thickness : CEM-3 / 1.6mm [0.06]
※ Optional chassis and cover material : Galvanizing steel board
※ Mounting torque (Mounting hole of chassis) : 1.5N・m max

Downloaded from Arrow.com.

COSEL AC-DC Power Supplies Open Frame

LHA30F

Ordering information

LH	A	30	F	-□□	-□
①	②	③	④	⑤	⑥

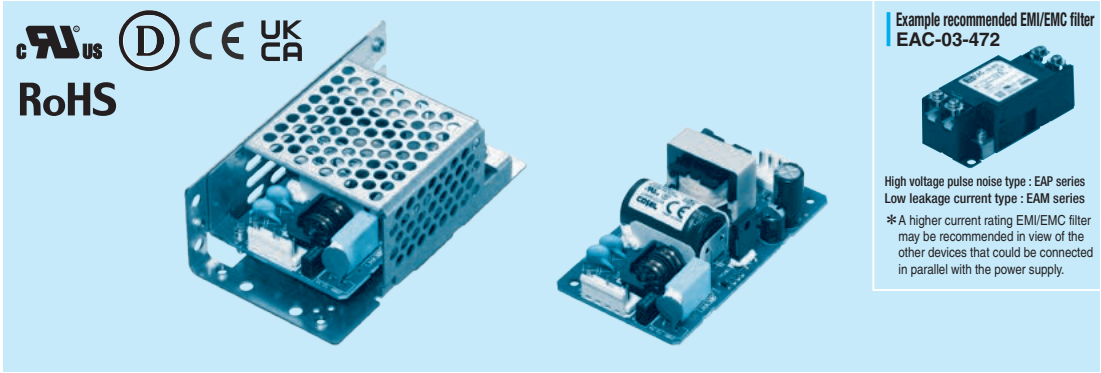

Example recommended EMI/EMC filter
EAC-03-472

High voltage pulse noise type : EAP series
Low leakage current type : EAM series

＊A higher current rating EMI/EMC filter may be recommended in view of the other devices that could be connected in parallel with the power supply.

①Series name
②Single output
③Output wattage
④Universal input
⑤Output voltage
⑥Optional ＊1
C : with Coating
G : Low leakage current
J4 : EP (TE Connectivity) connector type
S : with Chassis
SN : with Chassis & cover
Y : with Potentiometer

For option details, refer to Instruction Manual 6.

This power supply is manufactured by SMD technology. The stress to PCB like twisting or bending causes the defect of the unit, so handle the unit with care.
＊Make sure necessary tests will be carried out on your end equipment with the power supply installed in accordance with any required EMC/EMI regulations.

MODEL	LHA30F-3R3-Y	LHA30F-5	LHA30F-12	LHA30F-15	LHA30F-24
MAX OUTPUT WATTAGE[W] ＊2	19.8	30	30	30	31.2
DC OUTPUT ＊2	3.3V6A	5V6A	12V2.5A	15V2A	24V1.3A

SPECIFICATIONS

	MODEL		LHA30F-3R3-Y	LHA30F-5	LHA30F-12	LHA30F-15	LHA30F-24
INPUT	VOLTAGE[VAC] ＊2		85 - 264 1 ϕ (Refer to "Derating" and Instruction Manual 1.1)				
	CURRENT[A]	ACIN 100V	0.42typ	0.62typ			
		ACIN 230V	0.23typ	0.32typ			
	FREQUENCY[Hz]		50 / 60 (45 - 440)				
	EFFICIENCY[%]	ACIN 100V	83.0typ	83.0typ	85.0typ	85.5typ	87.0typ
		ACIN 230V	85.5typ	87.0typ	88.5typ	89.0typ	90.0typ
	INRUSH CURRENT[A]	ACIN 100V	15typ (Io=100%) Ta=25℃ at cold start				
		ACIN 230V	35typ (Io=100%) Ta=25℃ at cold start				
	LEAKAGE CURRENT[mA]		0.20 / 0.45max (ACIN 100V / 240V 60Hz, Io=100%, According to IEC62368-1 and DEN-AN)				
OUTPUT	VOLTAGE[V]		3.3	5	12	15	24
	CURRENT[A] ＊2		6.0	6.0	2.5	2.0	1.3
	LINE REGULATION[mV] ＊3		20max	20max	48max	60max	96max
	LOAD REGULATION[mV] ＊3		40max	40max	100max	120max	150max
	RIPPLE[mVp-p] ＊4	0 to +50℃	80max	80max	120max	120max	120max
		-10 to 0℃	140max	140max	160max	160max	160max
		Io=0 to 15%	300max	300max	300max	300max	300max
	RIPPLE NOISE[mVp-p] ＊4	0 to +50℃	120max	120max	150max	150max	150max
		-10 to 0℃	160max	160max	180max	180max	180max
		Io=0 to 15%	360max	360max	360max	360max	360max
	TEMPERATURE REGULATION[mV]	0 to +50℃	50max	50max	120max	150max	240max
		-10 to +50℃	60max	60max	150max	180max	290max
	DRIFT[mV] ＊5		20max	20max	48max	60max	96max
	START-UP TIME[ms]		40typ (ACIN 100V, Io=100%)				
	HOLD-UP TIME[ms]		25typ (ACIN 100V, Io=100%) / 170typ (ACIN 230V, Io=100%)				
	OUTPUT VOLTAGE ADJUSTMENT RANGE[V]		2.85 to 3.63	Fixed ("Y"option is available for adjusting output voltage between ±10%)			
	OUTPUT VOLTAGE SETTING[V]		3.30 to 3.40	4.90 to 5.30	11.50 to 12.50	14.40 to 15.60	23.00 to 25.00
PROTECTION CIRCUIT AND OTHERS	OVERCURRENT PROTECTION		Works over 105% of rating and recovers automatically				
	OVERVOLTAGE PROTECTION		4.00 to 5.25	5.75 to 7.00	13.80 to 16.80	17.25 to 21.00	27.60 to 33.60
	OPERATING INDICATION		Not provided				
	REMOTE SENSING		Not provided				
ISOLATION	INPUT-OUTPUT		AC3,000V 1minute, Cutoff current = 10mA, DC500V 100MΩ min (At Room Temperature)				
	INPUT-FG		AC2,000V 1minute, Cutoff current = 10mA, DC500V 100MΩ min (At Room Temperature)				
	OUTPUT-FG		AC500V 1minute, Cutoff current = 25mA, DC500V 100MΩ min (At Room Temperature)				
ENVIRONMENT	OPERATING TEMP.,HUMID.AND ALTITUDE ＊2		-10 to +70℃, 20 - 90%RH (Non condensing), 5,000m (16,500feet) max				
	STORAGE TEMP.,HUMID.AND ALTITUDE		-20 to +75℃, 20 - 90%RH (Non condensing), 9,000m (30,000feet) max				
	VIBRATION		10 - 55Hz, 19.6m/s² (2G), 3minutes period, 60minutes each along X, Y and Z axis				
	IMPACT		196.1m/s² (20G), 11ms, once each X, Y and Z axis				
SAFETY AND NOISE REGULATIONS	AGENCY APPROVALS		UL62368-1, C-UL (equivalent to CAN/CSA-C22.2No.62368-1), EN62368-1, Complies with DEN-AN				
	CONDUCTED NOISE		Complies with FCC-B, VCCI-B, CISPR11-B, CISPR32-B, EN55011-B, EN55032-B				
	HARMONIC ATTENUATOR ＊6		Complies with IEC61000-3-2 (Class A) (No built-in power factor correction)				
OTHERS	CASE SIZE/WEIGHT		50×27×87.5mm [1.97×1.07×3.44 inches] (W×H×D) / 100g max (with chassis & cover : 210g max)				
	COOLING METHOD ＊2		Convection/Forced air (Requires external fan) (Refer to "Derating")				

＊1 The listed options may affect the published standard specifications. Please contact us for detailed product specifications.
＊2 Derating is required.
＊3 At low load conditions, the burst mode operation will start. To check load regulation, you will need to measure the characteristics at average mode with instruments.
＊4 This is the value that measured on measuring board with capacitor of 22μF and 0.1μF at 150mm from output terminal. Measured by 20MHz oscilloscope or Ripple-Noise meter (Equivalent to KEISOKU-GIKEN:RM104).
Ripple and ripple noise spec is change at Io=0 to 15% by burst operation.
＊5 Drift is the change in DC output for an eight hour period after a half-hour warm-up at 25℃, with the input voltage held constant at the rated input/output.
＊6 Please contact us about another class. When two or more units are operating it may not comply with the IEC61000-3-2. Please contact us for details.
＊ To meet the specification, do not operate overload condition.
＊ Parallel operation is not possible.
＊ Sound noise may be generated by power supply in case of pulse load.

Downloaded from Arrow.com.

Block diagram

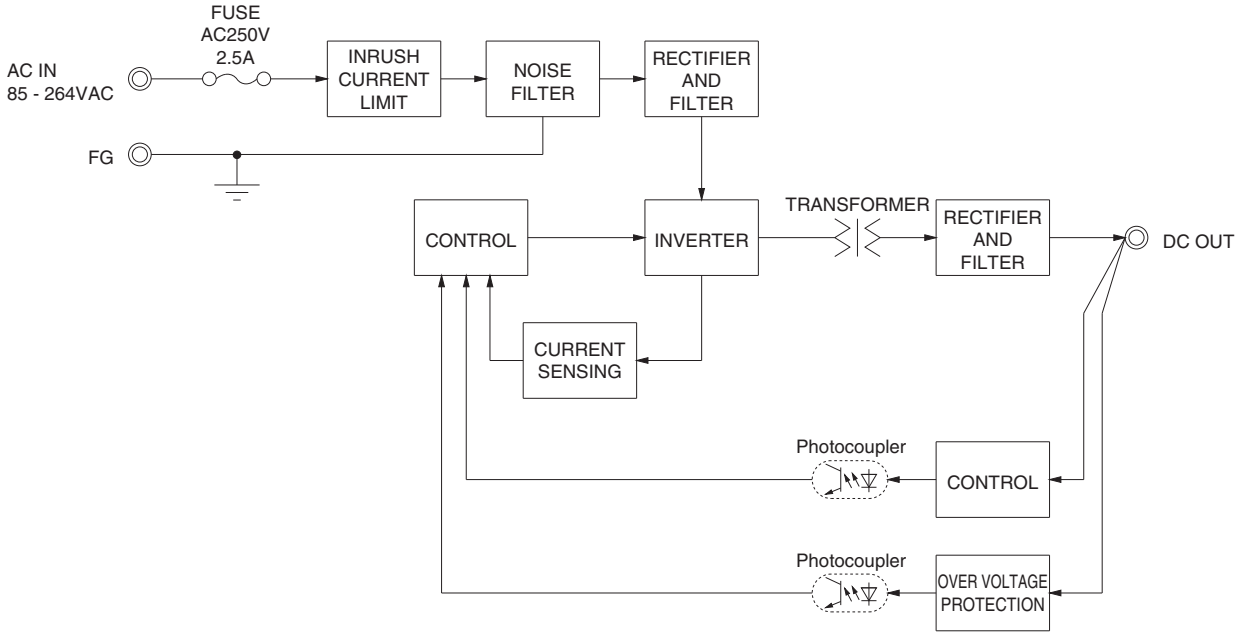

External view

※ External size of option is different from standard type.

Standard type

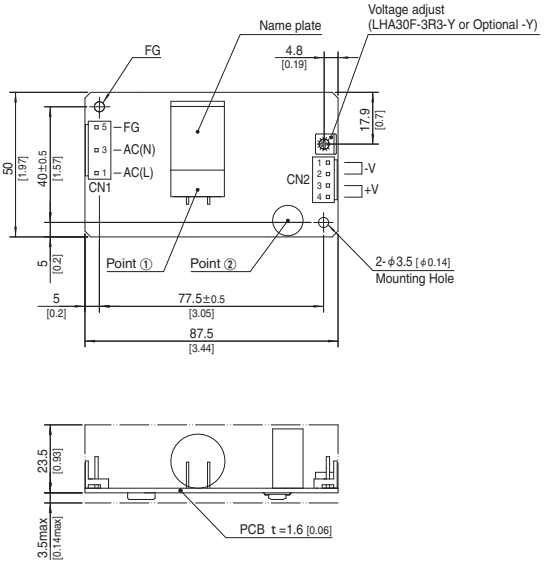

Chassis and cover type

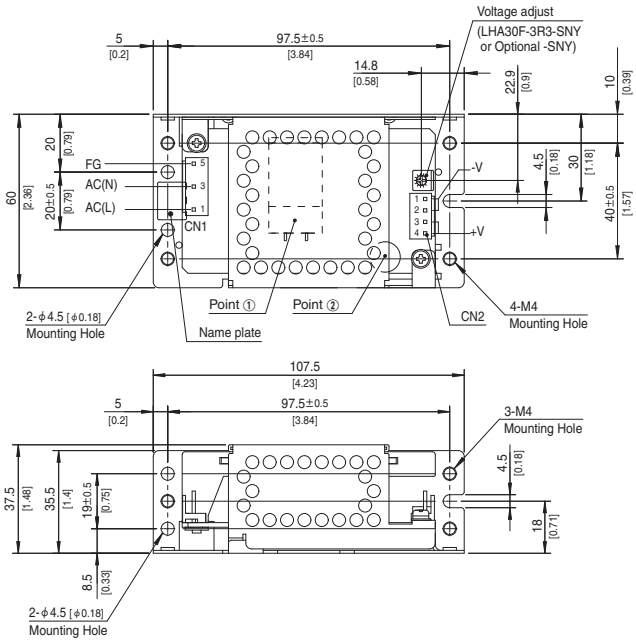

※ The back side of PCB of the power supply is assembled some SMDs.
Be careful not to bump against the attached area by vibration.
※ Use the spacer of 8mm [0.31] length or more for isolation.
And do not use press-fitting bush.
※ Point ①, Point ② are thermometry points. Please refer to Instruction Manual 3.

I/O Connector		Mating connector	Terminal	
CN1	B3P5-VH	VHR-5N	Chain	SVH-21T-P1.1
			Loose	BVH-21T-P1.1
CN2	B4P-VH	VHR-4N	Chain	SVH-21T-P1.1
			Loose	BVH-21T-P1.1

(Mfr: J.S.T.)

※ I/O Connector is Mfr.J.S.T.
※ Option:-J4:EP (TE Connectivity) connector type.

CN1

Pin No.	Input
1	AC(L)
2	
3	AC(N)
4	
5	FG

CN2

Pin No.	Output
1, 2	-V
3, 4	+V

※ Pin No.2 and 4 is NC at CN1.
※ Keep drawing current per pin below 5A for CN2.

※ Dimensions in mm, [ ]=inches
※ Tolerance : ±1 [±0.04]
※ Weight : 100g max (with chassis and cover : 210g max)
※ PCB Material / thickness : FR-4 / 1.6mm [0.06]
※ Optional chassis and cover material : Galvanizing steel board
※ Mounting torque (Mounting hole of chassis) : 1.5N･m max

Downloaded from Arrow.com.

COSEL AC-DC Power Supplies Open Frame

LHA50F

Ordering information

LH	A	50	F	-□□	-□
①	②	③	④	⑤	⑥

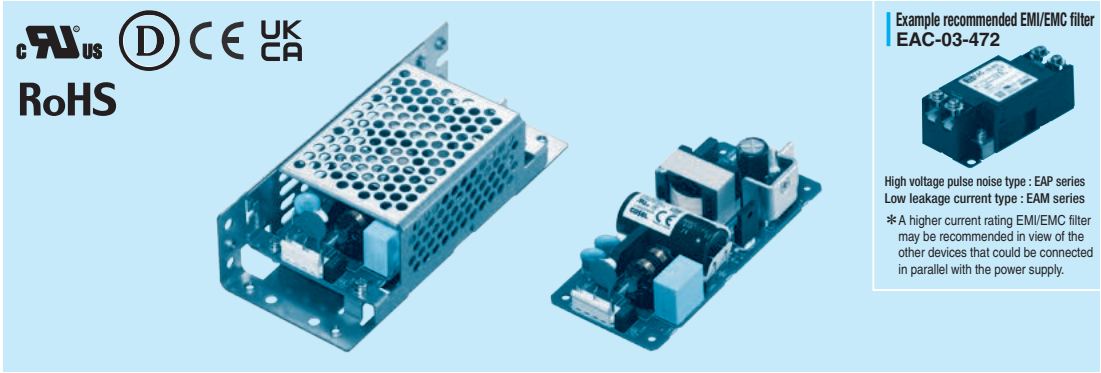

Example recommended EMI/EMC filter
EAC-03-472

High voltage pulse noise type : EAP series
Low leakage current type : EAM series

＊A higher current rating EMI/EMC filter may be recommended in view of the other devices that could be connected in parallel with the power supply.

①Series name
②Single output
③Output wattage
④Universal input
⑤Output voltage
⑥Optional ＊1
C : with Coating
G : Low leakage current
J4 : EP (TE Connectivity) connector type
S : with Chassis
SN : with Chassis & cover
Y : with Potentiometer

For option details, refer to Instruction Manual 6.

This power supply is manufactured by SMD technology. The stress to PCB like twisting or bending causes the defect of the unit, so handle the unit with care.
＊Make sure necessary tests will be carried out on your end equipment with the power supply installed in accordance with any required EMC/EMI regulations.

MODEL	LHA50F-3R3-Y	LHA50F-5	LHA50F-12	LHA50F-15	LHA50F-24	LHA50F-36	LHA50F-48
MAX OUTPUT WATTAGE[W] ＊2	26.4	40	51.6	52.5	50.4	50.4	52.8
DC OUTPUT ＊2	3.3V8A	5V8A	12V4.3A	15V3.5A	24V2.1A	36V1.4A	48V1.1A

SPECIFICATIONS

	MODEL		LHA50F-3R3-Y	LHA50F-5	LHA50F-12	LHA50F-15	LHA50F-24	LHA50F-36	LHA50F-48
INPUT	VOLTAGE[VAC] ＊2		85 - 264 1 ϕ (Refer to “Derating” and Instruction Manual 1.1)						
	CURRENT[A]	ACIN 100V	0.56typ	0.82typ	1.05typ				
		ACIN 230V	0.30typ	0.42typ	0.52typ				
	FREQUENCY[Hz]		50 / 60 (45 - 440)						
	EFFICIENCY[%]	ACIN 100V	80.0typ	83.0typ	87.0typ	85.5typ	86.0typ	86.5typ	86.5typ
		ACIN 230V	83.5typ	86.5typ	90.5typ	89.0typ	89.0typ	90.0typ	90.0typ
	INRUSH CURRENT[A]	ACIN 100V	15typ (Io=100%) Ta=25℃ at cold start						
		ACIN 230V	35typ (Io=100%) Ta=25℃ at cold start						
	LEAKAGE CURRENT[mA]		0.30 / 0.65max (ACIN 100V / 240V 60Hz, Io=100%, According to IEC62368-1 and DEN-AN)						
OUTPUT	VOLTAGE[V]		3.3	5	12	15	24	36	48
	CURRENT[A] ＊2		8.0	8.0	4.3	3.5	2.1	1.4	1.1
	LINE REGULATION[mV] ＊3		20max	20max	48max	60max	96max	144max	192max
	LOAD REGULATION[mV] ＊3		40max	40max	100max	120max	150max	240max	240max
	RIPPLE[mVp-p] ＊4	0 to +50℃	80max	80max	120max	120max	120max	150max	150max
		-10 to 0℃	140max	140max	160max	160max	160max	200max	200max
		Io=0 to 15%	300max	300max	300max	300max	300max	300max	300max
	RIPPLE NOISE[mVp-p] ＊4	0 to +50℃	120max	120max	150max	150max	150max	250max	250max
		-10 to 0℃	160max	160max	180max	180max	180max	300max	300max
		Io=0 to 15%	360max	360max	360max	360max	360max	360max	360max
	TEMPERATURE REGULATION[mV]	0 to +50℃	50max	50max	120max	150max	240max	360max	480max
		-10 to +50℃	60max	60max	150max	180max	290max	450max	600max
	DRIFT[mV] ＊5		20max	20max	48max	60max	96max	144max	192max
	START-UP TIME[ms]		40typ (ACIN 100V, Io=100%)						
	HOLD-UP TIME[ms]		20typ (ACIN 100V, Io=100%) / 140typ (ACIN 230V, Io=100%)						
	OUTPUT VOLTAGE ADJUSTMENT RANGE[V]		2.85 to 3.63	Fixed (“Y”option is available for adjusting output voltage between ±10%)					
	OUTPUT VOLTAGE SETTING[V]		3.30 to 3.40	4.90 to 5.30	11.50 to 12.50	14.40 to 15.60	23.00 to 25.00	34.50 to 37.50	46.00 to 50.00
PROTECTION CIRCUIT AND OTHERS	OVERCURRENT PROTECTION		Works over 105% of rating and recovers automatically						
	OVERVOLTAGE PROTECTION		4.00 to 5.25	5.75 to 7.00	13.80 to 16.80	17.25 to 21.00	27.60 to 33.60	41.40 to 50.40	55.20 to 67.20
	OPERATING INDICATION		Not provided						
	REMOTE SENSING		Not provided						
ISOLATION	INPUT-OUTPUT		AC3,000V 1minute, Cutoff current = 10mA, DC500V 100MΩ min (At Room Temperature)						
	INPUT-FG		AC2,000V 1minute, Cutoff current = 10mA, DC500V 100MΩ min (At Room Temperature)						
	OUTPUT-FG		AC500V 1minute, Cutoff current = 25mA, DC500V 100MΩ min (At Room Temperature)						
ENVIRONMENT	OPERATING TEMP.,HUMID.AND ALTITUDE ＊2		-10 to +70℃, 20 - 90%RH (Non condensing), 5,000m (16,500feet) max						
	STORAGE TEMP.,HUMID.AND ALTITUDE		-20 to +75℃, 20 - 90%RH (Non condensing), 9,000m (30,000feet) max						
	VIBRATION		10 - 55Hz, 19.6m/s² (2G), 3minutes period, 60minutes each along X, Y and Z axis						
	IMPACT		196.1m/s² (20G), 11ms, once each X, Y and Z axis						
SAFETY AND NOISE REGULATIONS	AGENCY APPROVALS		UL62368-1, C-UL (equivalent to CAN/CSA-C22.2No.62368-1), EN62368-1, Complies with DEN-AN						
	CONDUCTED NOISE		Complies with FCC-B, VCCI-B, CISPR11-B, CISPR32-B, EN55011-B, EN55032-B						
	HARMONIC ATTENUATOR ＊6		Complies with IEC61000-3-2 (Class A) (No built-in power factor correction)						
OTHERS	CASE SIZE/WEIGHT		50×27×112mm [1.97×1.07×4.41 inches] (W×H×D) / 140g max (with chassis & cover : 280g max)						
	COOLING METHOD ＊2		Convection/Forced air (Requires external fan) (Refer to “Derating”)						

＊1 The listed options may affect the published standard specifications. Please contact us for detailed product specifications.
＊2 Derating is required.
＊3 At low load conditions, the burst mode operation will start. To check load regulation, you will need to measure the characteristics at average mode with instruments.
＊4 This is the value that measured on measuring board with capacitor of 22μF and 0.1μF at 150mm from output terminal. Measured by 20MHz oscilloscope or Ripple-Noise meter (Equivalent to KEISOKU-GIKEN:RM104).
Ripple and ripple noise spec is change at Io=0 to 15% by burst operation.
＊5 Drift is the change in DC output for an eight hour period after a half-hour warm-up at 25℃, with the input voltage held constant at the rated input/output.
＊6 Please contact us about another class. When two or more units are operating it may not comply with the IEC61000-3-2. Please contact us for details.
＊ To meet the specification, do not operate overload condition.
＊ Parallel operation is not possible.
＊ Sound noise may be generated by power supply in case of pulse load.

Downloaded from Arrow.com.

Block diagram

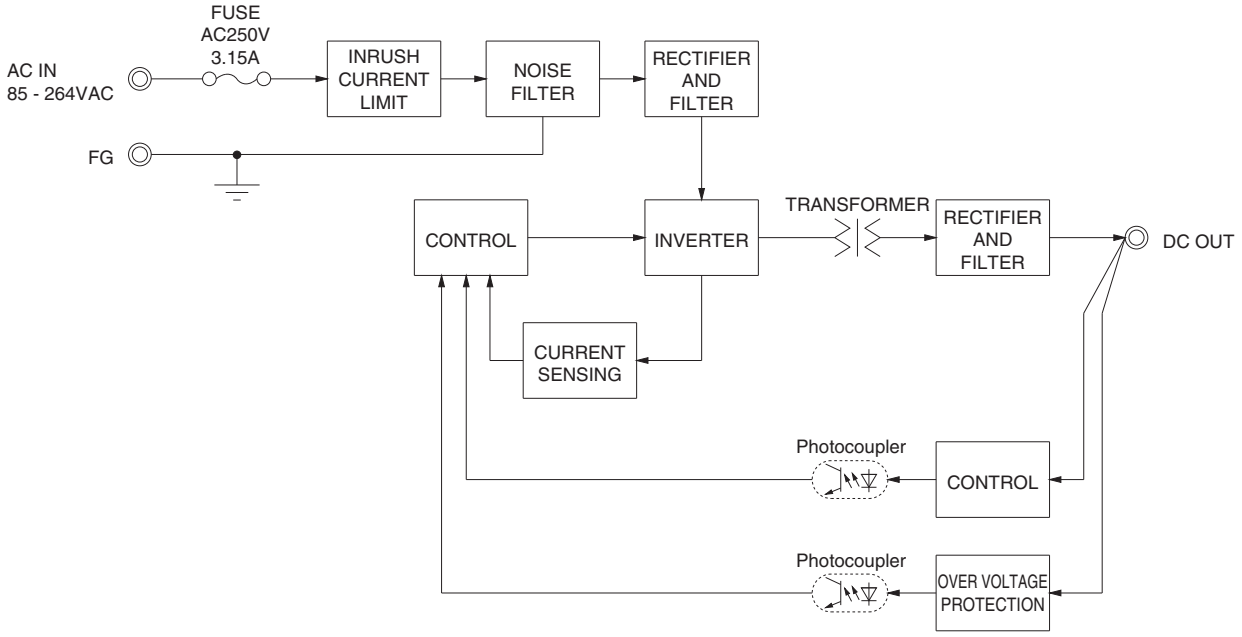

External view

※ External size of option is different from standard type.

Standard type

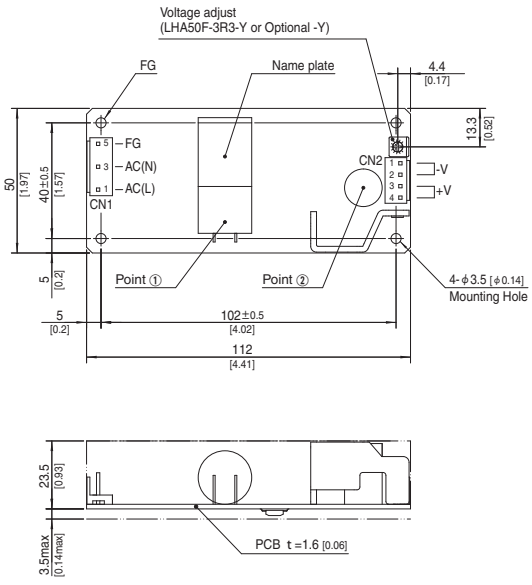

Chassis and cover type

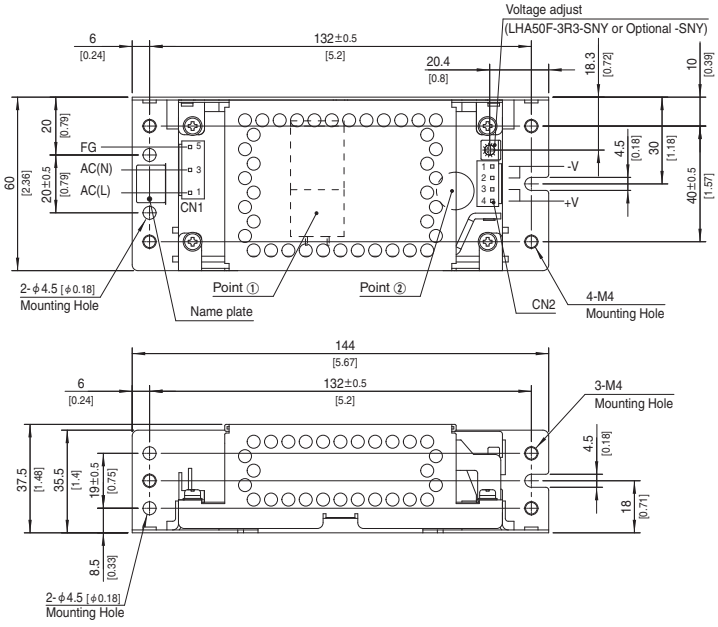

※ The back side of PCB of the power supply is assembled some SMDs.
Be careful not to bump against the attached area by vibration.
※ Use the spacer of 8mm [0.31] length or more for isolation.
And do not use press-fitting bush.
※ Point ①, Point ② are thermometry points. Please refer to Instruction Manual 3.

I/O Connector		Mating connector	Terminal	
CN1	B3P5-VH	VHR-5N	Chain	SVH-21T-P1.1
			Loose	BVH-21T-P1.1
CN2	B4P-VH	VHR-4N	Chain	SVH-21T-P1.1
			Loose	BVH-21T-P1.1

(Mfr: J.S.T.)

※ I/O Connector is Mfr.J.S.T.
※ Option:-J4:EP (TE Connectivity) connector type.

CN1

Pin No.	Input
1	AC(L)
2	
3	AC(N)
4	
5	FG

CN2

Pin No.	Output
1, 2	-V
3, 4	+V

※ Pin No.2 and 4 is NC at CN1.
※ Keep drawing current per pin below 5A for CN2.

※ Dimensions in mm, [ ]=inches
※ Tolerance : ±1 [±0.04]
※ Weight : 140g max (with chassis and cover : 280g max)
※ PCB Material / thickness : FR-4 / 1.6mm [0.06]
※ Optional chassis and cover material : Galvanizing steel board
※ Mounting torque (Mounting hole of chassis) : 1.5N･m max

Downloaded from Arrow.com.

COSEL AC-DC Power Supplies Open Frame

LHA75F

Ordering information

LH	A	75	F	-□□	-□
①	②	③	④	⑤	⑥

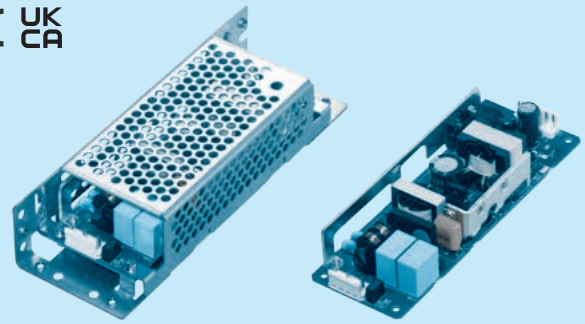

Example recommended EMI/EMC filter
EAC-03-472

High voltage pulse noise type : EAP series
Low leakage current type : EAM series

＊A higher current rating EMI/EMC filter may be recommended in view of the other devices that could be connected in parallel with the power supply.

①Series name
②Single output
③Output wattage
④Universal input
⑤Output voltage
⑥Optional ＊1
C : with Coating
G : Low leakage current
J4 : EP (TE Connectivity) connector type
S : with Chassis
SN : with Chassis & cover
Y : with Potentiometer

For option details, refer to Instruction Manual 6.

This power supply is manufactured by SMD technology. The stress to PCB like twisting or bending causes the defect of the unit, so handle the unit with care.
＊Make sure necessary tests will be carried out on your end equipment with the power supply installed in accordance with any required EMC/EMI regulations.

MODEL	LHA75F-3R3-Y	LHA75F-5	LHA75F-12	LHA75F-15	LHA75F-24	LHA75F-36	LHA75F-48
MAX OUTPUT WATTAGE[W] ＊2	39.6	60	75.6	75	76.8	75.6	76.8
DC OUTPUT ＊2	3.3V12A	5V12A	12V6.3A	15V5A	24V3.2A	36V2.1A	48V1.6A

SPECIFICATIONS

	MODEL		LHA75F-3R3-Y	LHA75F-5	LHA75F-12	LHA75F-15	LHA75F-24	LHA75F-36	LHA75F-48
INPUT	VOLTAGE[VAC] ＊2		85 - 264 1φ (Refer to "Derating" and Instruction Manual 1.1)						
	CURRENT[A]	ACIN 100V	0.6typ	0.8typ	0.9typ				
		ACIN 230V	0.3typ	0.4typ	0.5typ				
	FREQUENCY[Hz]		50 / 60 (45 - 66)						
	EFFICIENCY[%]	ACIN 100V	74.0typ	79.0typ	84.5typ	85.5typ	86.0typ	87.5typ	87.5typ
		ACIN 230V	75.0typ	81.0typ	86.5typ	87.5typ	88.0typ	89.5typ	89.5typ
	POWER FACTOR (Io=100%)	ACIN 100V	0.96typ	0.97typ					
		ACIN 230V	0.70typ	0.80typ					
	INRUSH CURRENT[A]	ACIN 100V	15typ (Io=100%) Ta=25℃ at cold start						
		ACIN 230V	35typ (Io=100%) Ta=25℃ at cold start						
	LEAKAGE CURRENT[mA]		0.40 / 0.75max (ACIN 100V / 240V 60Hz, Io=100%, According to IEC62368-1 and DEN-AN)						
OUTPUT	VOLTAGE[V]		3.3	5	12	15	24	36	48
	CURRENT[A] ＊2		12.0	12.0	6.3	5.0	3.2	2.1	1.6
	LINE REGULATION[mV] ＊3		20max	20max	48max	60max	96max	144max	192max
	LOAD REGULATION[mV] ＊3		40max	40max	100max	120max	150max	240max	240max
	RIPPLE[mVp-p] ＊4	0 to +50℃ ＊7	80max	80max	120max	120max	120max	150max	150max
		-10 to 0℃	140max	140max	160max	160max	160max	200max	200max
		Io=0 to 15%	300max	300max	360max	500max	500max	500max	500max
	RIPPLE NOISE[mVp-p] ＊4	0 to +50℃ ＊7	120max	120max	150max	150max	150max	250max	250max
		-10 to 0℃	160max	160max	180max	180max	180max	300max	300max
		Io=0 to 15%	360max	360max	400max	600max	600max	600max	600max
	TEMPERATURE REGULATION[mV]	0 to +50℃ ＊7	50max	50max	120max	150max	240max	360max	480max
		-10 to +50℃ ＊7	60max	60max	150max	180max	290max	450max	600max
	DRIFT[mV] ＊5		20max	20max	48max	60max	96max	144max	192max
	START-UP TIME[ms]		100typ (ACIN 100V, Io=100%)						
	HOLD-UP TIME[ms]		20typ (ACIN 100V, Io=100%)						
	OUTPUT VOLTAGE ADJUSTMENT RANGE[V]		2.85 to 3.63	Fixed ("Y"option is available for adjusting output voltage between ±10%)					
	OUTPUT VOLTAGE SETTING[V]		3.30 to 3.40	4.90 to 5.30	11.50 to 12.50	14.40 to 15.60	23.00 to 25.00	34.50 to 37.50	46.00 to 50.00
PROTECTION CIRCUIT AND OTHERS	OVERCURRENT PROTECTION		Works over 105% of rating and recovers automatically						
	OVERVOLTAGE PROTECTION		4.00 to 5.25	5.75 to 7.00	13.80 to 16.80	17.25 to 21.00	27.60 to 33.60	41.40 to 50.40	55.20 to 67.20
	OPERATING INDICATION		Not provided						
	REMOTE SENSING		Not provided						
ISOLATION	INPUT-OUTPUT		AC3,000V 1minute, Cutoff current = 10mA, DC500V 100MΩ min (At Room Temperature)						
	INPUT-FG		AC2,000V 1minute, Cutoff current = 10mA, DC500V 100MΩ min (At Room Temperature)						
	OUTPUT-FG		AC500V 1minute, Cutoff current = 25mA, DC500V 100MΩ min (At Room Temperature)						
ENVIRONMENT	OPERATING TEMP.,HUMID.AND ALTITUDE ＊2		-10 to +70℃, 20 - 90%RH (Non condensing), 5,000m (16,500feet) max						
	STORAGE TEMP.,HUMID.AND ALTITUDE		-20 to +75℃, 20 - 90%RH (Non condensing), 9,000m (30,000feet) max						
	VIBRATION		10 - 55Hz, 19.6m/s² (2G), 3minutes period, 60minutes each along X, Y and Z axis						
	IMPACT		196.1m/s² (20G), 11ms, once each X, Y and Z axis						
SAFETY AND NOISE REGULATIONS	AGENCY APPROVALS		UL62368-1, C-UL (equivalent to CAN/CSA-C22.2No.62368-1), EN62368-1, Complies with DEN-AN						
	CONDUCTED NOISE		Complies with FCC-B, VCCI-B, CISPR11-B, CISPR32-B, EN55011-B, EN55032-B						
	HARMONIC ATTENUATOR ＊6		Complies with IEC61000-3-2 (Class A)						
OTHERS	CASE SIZE/WEIGHT		50×27×150mm [1.97×1.07×5.91 inches] (W×H×D) / 190g max (with chassis & cover : 370g max)						
	COOLING METHOD ＊2		Convection/Forced air (Requires external fan) (Refer to "Derating")						

＊1 The listed options may affect the published standard specifications. Please contact us for detailed product specifications.
＊2 Derating is required.
＊3 At low load conditions, the burst mode operation will start. To check load regulation, you will need to measure the characteristics at average mode with instruments.
＊4 This is the value that measured on measuring board with capacitor of 22μF and 0.1μF at 150mm from output terminal. Measured by 20MHz oscilloscope or Ripple-Noise meter (Equivalent to KEISOKU-GIKEN:RM104). Ripple and ripple noise spec is change at Io=0 to 15% by burst operation.
＊5 Drift is the change in DC output for an eight hour period after a half-hour warm-up at 25℃, with the input voltage held constant at the rated input/output.
＊6 Please contact us about another class.
＊7 3.3V and 5V output product, the maximum temperature of 40℃.
＊ To meet the specification, do not operate overload condition.
＊ Parallel operation is not possible.
＊ Sound noise may be generated by power supply in case of pulse load.

Downloaded from Arrow.com.

Block diagram

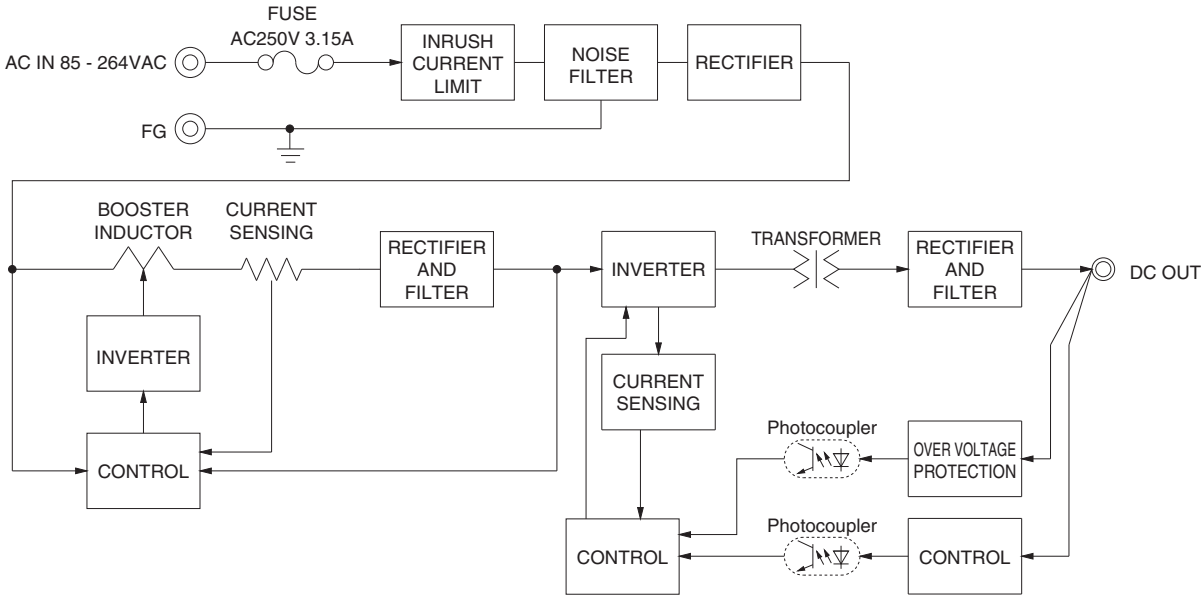

External view

※ External size of option is different from standard type.

Standard type

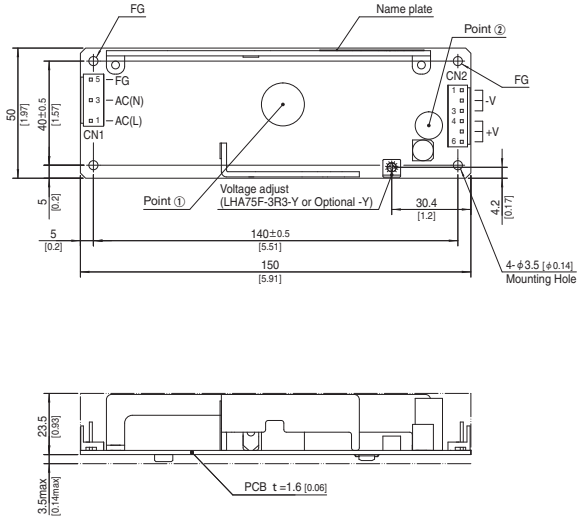

Chassis and cover type

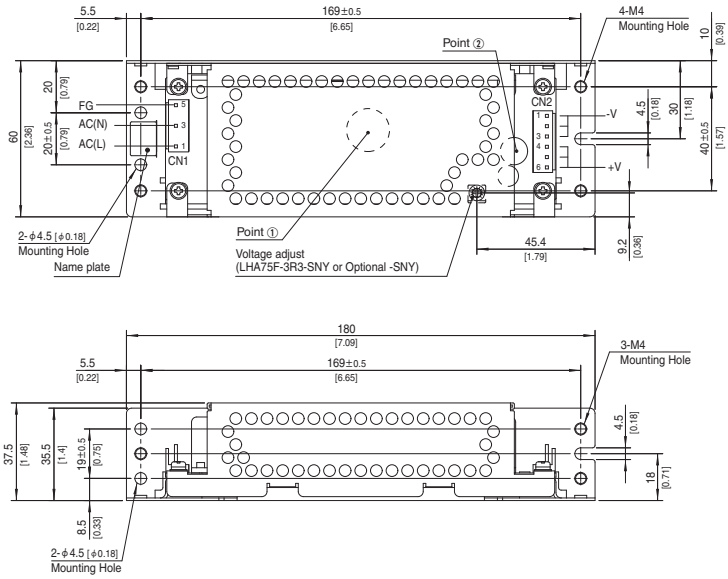

※ The back side of PCB of the power supply is assembled some SMDs.
Be careful not to bump against the attached area by vibration.
※ Use the spacer of 8mm [0.31] length or more for isolation.
And do not use press-fitting bush.
※ Point ①, Point ② are thermometry points. Please refer to Instruction Manual 3.

I/O Connector		Mating connector	Terminal	
CN1	B3P5-VH	VHR-5N	Chain	SVH-21T-P1.1
			Loose	BVH-21T-P1.1
CN2	B6P-VH	VHR-6N	Chain	SVH-21T-P1.1
			Loose	BVH-21T-P1.1

(Mfr: J.S.T.)

※ I/O Connector is Mfr.J.S.T.
※ Option:-J4:EP (TE Connectivity) connector type.

CN1

Pin No.	Input
1	AC(L)
2	
3	AC(N)
4	
5	FG

CN2

Pin No.	Output
1 to 3	-V
4 to 6	+V

※ Pin No.2 and 4 is NC at CN1.
※ Keep drawing current per pin below 5A for CN2.

※ Dimensions in mm, [ ]=inches
※ Tolerance : ±1 [±0.04]
※ Weight : 190g max (with chassis and cover : 370g max)
※ PCB Material / thickness : FR-4 / 1.6mm [0.06]
※ Optional chassis and cover material : Galvanizing steel board
※ Mounting torque (Mounting hole of chassis) : 1.5N･m max

Downloaded from Arrow.com.

COSEL AC-DC Power Supplies Open Frame

LHA100F

Ordering information

LH	A	100	F	-□□	-□
①	②	③	④	⑤	⑥

RoHS

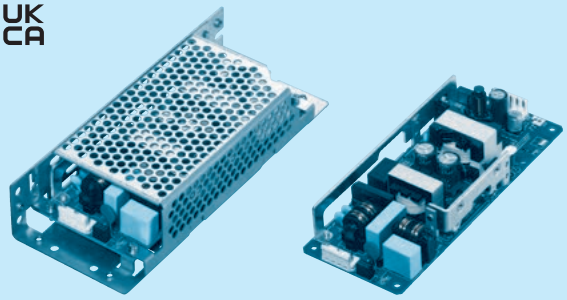

Example recommended EMI/EMC filter
EAC-03-472

High voltage pulse noise type : EAP series
Low leakage current type : EAM series

＊A higher current rating EMI/EMC filter may be recommended in view of the other devices that could be connected in parallel with the power supply.

①Series name
②Single output
③Output wattage
④Universal input
⑤Output voltage
⑥Optional ＊1
C : with Coating
G : Low leakage current
J4 : EP (TE Connectivity) connector type
R2 : with Remote ON/OFF
S : with Chassis
SN : with Chassis & cover
Y : with Potentiometer

For option details, refer to Instruction Manual 6.

This power supply is manufactured by SMD technology. The stress to PCB like twisting or bending causes the defect of the unit, so handle the unit with care.
＊Make sure necessary tests will be carried out on your end equipment with the power supply installed in accordance with any required EMC/EMI regulations.

MODEL	LHA100F-5	LHA100F-12	LHA100F-15	LHA100F-24	LHA100F-36	LHA100F-48
MAX OUTPUT WATTAGE[W] ＊2	75	102	100.5	103.2	100.8	100.8
DC OUTPUT ＊2	5V15A	12V8.5A	15V6.7A	24V4.3A	36V2.8A	48V2.1A

SPECIFICATIONS

	MODEL		LHA100F-5	LHA100F-12	LHA100F-15	LHA100F-24	LHA100F-36	LHA100F-48
INPUT	VOLTAGE[VAC] ＊2		85 - 264 1φ (Refer to "Derating" and Instruction Manual 1.1)					
	CURRENT[A]	ACIN 100V	1.0typ	1.2typ				
		ACIN 230V	0.5typ	0.6typ				
	FREQUENCY[Hz]		50 / 60 (45 - 66)					
	EFFICIENCY[%]	ACIN 100V	82.0typ	87.0typ	88.0typ	86.5typ	87.0typ	87.0typ
		ACIN 230V	84.0typ	89.0typ	90.0typ	89.0typ	89.0typ	89.0typ
	POWER FACTOR (Io=100%)	ACIN 100V	0.97typ	0.97typ				
		ACIN 230V	0.83typ	0.87typ				
	INRUSH CURRENT[A]	ACIN 100V	15typ (Io=100%) Ta=25℃ at cold start					
		ACIN 230V	35typ (Io=100%) Ta=25℃ at cold start					
	LEAKAGE CURRENT[mA]		0.40 / 0.75max (ACIN 100V / 240V 60Hz, Io=100%, According to IEC62368-1 and DEN-AN)					
OUTPUT	VOLTAGE[V]		5	12	15	24	36	48
	CURRENT[A] ＊2		15.0	8.5	6.7	4.3	2.8	2.1
	LINE REGULATION[mV] ＊3		20max	48max	60max	96max	144max	192max
	LOAD REGULATION[mV] ＊3		40max	100max	120max	150max	240max	240max
	RIPPLE[mVp-p] ＊4	0 to +50℃＊7	80max	120max	120max	120max	150max	150max
		-10 to 0℃	140max	160max	160max	160max	200max	200max
		Io=0 to 15%	300max	360max	500max	500max	500max	500max
	RIPPLE NOISE[mVp-p] ＊4	0 to +50℃＊7	120max	150max	150max	150max	250max	250max
		-10 to 0℃	160max	180max	180max	180max	300max	300max
		Io=0 to 15%	360max	400max	600max	600max	600max	600max
	TEMPERATURE REGULATION[mV]	0 to +50℃ ＊7	50max	120max	150max	240max	360max	480max
		-10 to +50℃＊7	60max	150max	180max	290max	450max	600max
	DRIFT[mV] ＊5		20max	48max	60max	96max	144max	192max
	START-UP TIME[ms]		100typ (ACIN 100V, Io=100%)					
	HOLD-UP TIME[ms]		20typ (ACIN 100V, Io=100%)					
	OUTPUT VOLTAGE ADJUSTMENT RANGE[V]		Fixed ("Y"option is available for adjusting output voltage between ±10%)					
	OUTPUT VOLTAGE SETTING[V]		4.90 to 5.30	11.50 to 12.50	14.40 to 15.60	23.00 to 25.00	34.50 to 37.50	46.00 to 50.00
PROTECTION CIRCUIT AND OTHERS	OVERCURRENT PROTECTION		Works over 105% of rating and recovers automatically					
	OVERVOLTAGE PROTECTION		5.75 to 7.00	13.80 to 16.80	17.25 to 21.00	27.60 to 33.60	41.40 to 50.40	55.20 to 67.20
	OPERATING INDICATION		Not provided					
	REMOTE SENSING		Not provided					
	REMOTE CONTROL (RC)		Option (Refer to Instruction Manual 6.1)					
ISOLATION	INPUT-OUTPUT·RC ＊8		AC3,000V 1minute, Cutoff current = 10mA, DC500V 100MΩ min (At Room Temperature)					
	INPUT-FG		AC2,000V 1minute, Cutoff current = 10mA, DC500V 100MΩ min (At Room Temperature)					
	OUTPUT·RC-FG ＊8		AC500V 1minute, Cutoff current = 25mA, DC500V 100MΩ min (At Room Temperature)					
	OUTPUT-RC ＊8		AC100V 1minute, Cutoff current = 25mA, DC100V 10MΩ min (At Room Temperature)					
ENVIRONMENT	OPERATING TEMP.,HUMID.AND ALTITUDE ＊2		-10 to +70℃, 20 - 90%RH (Non condensing), 5,000m (16,500feet) max					
	STORAGE TEMP.,HUMID.AND ALTITUDE		-20 to +75℃, 20 - 90%RH (Non condensing), 9,000m (30,000feet) max					
	VIBRATION		10 - 55Hz, 19.6m/s² (2G), 3minutes period, 60minutes each along X, Y and Z axis					
	IMPACT		196.1m/s² (20G), 11ms, once each X, Y and Z axis					
SAFETY AND NOISE REGULATIONS	AGENCY APPROVALS		UL62368-1, C-UL (equivalent to CAN/CSA-C22.2No.62368-1), EN62368-1, Complies with DEN-AN					
	CONDUCTED NOISE		Complies with FCC-B, VCCI-B, CISPR11-B, CISPR32-B, EN55011-B, EN55032-B					
	HARMONIC ATTENUATOR ＊6		Complies with EN61000-3-2 (Class A)					
OTHERS	CASE SIZE/WEIGHT		62×27×155mm [2.44×1.07×6.10 inches] (W×H×D) / 250g max (with chassis & cover : 450g max)					
	COOLING METHOD ＊2		Convection/Forced air (Requires external fan) (Refer to "Derating")					

＊1 The listed options may affect the published standard specifications. Please contact us for detailed product specifications.
＊2 Derating is required.
＊3 At low load conditions, the burst mode operation will start. To check load regulation, you will need to measure the characteristics at average mode with instruments.
＊4 This is the value that measured on measuring board with capacitor of 22μF and 0.1μF at 150mm from output terminal. Measured by 20MHz oscilloscope or Ripple-Noise meter (Equivalent to KEISOKU-GIKEN:RM104).
Ripple and ripple noise spec is change at Io=0 to 15% by burst operation.
＊5 Drift is the change in DC output for an eight hour period after a half-hour warm-up at 25℃, with the input voltage held constant at the rated input/output.
＊6 Please contact us about another class.
＊7 5V output product, the maximum temperature of 40℃.
＊8 Applicable when Remote ON/OFF (optional) is added.
＊ To meet the specification, do not operate overload condition.
＊ Parallel operation is not possible.
＊ Sound noise may be generated by power supply in case of pulse load.

Downloaded from Arrow.com.

Block diagram

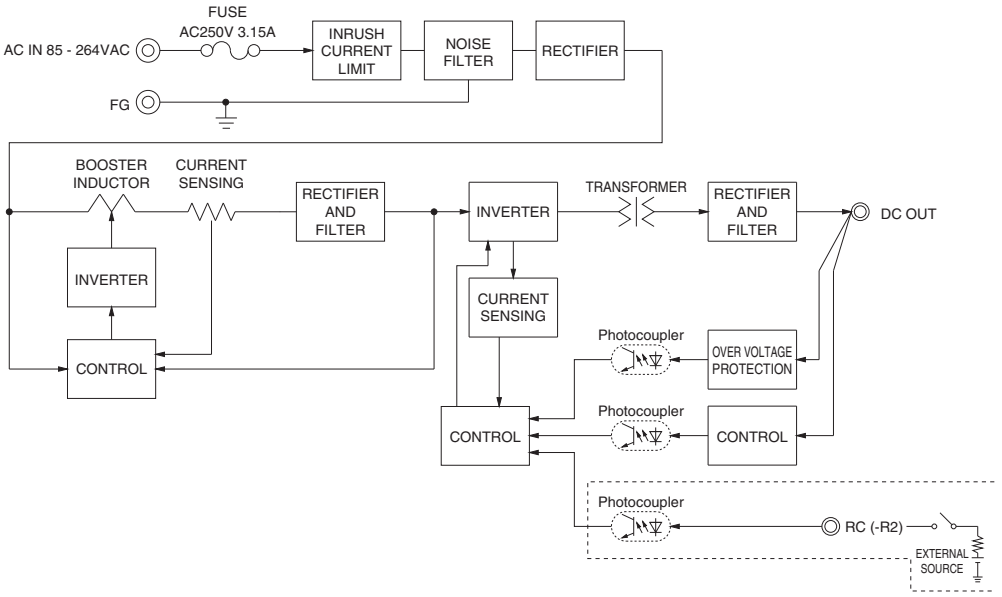

External view

※ External size of option is different from standard type.

Standard type

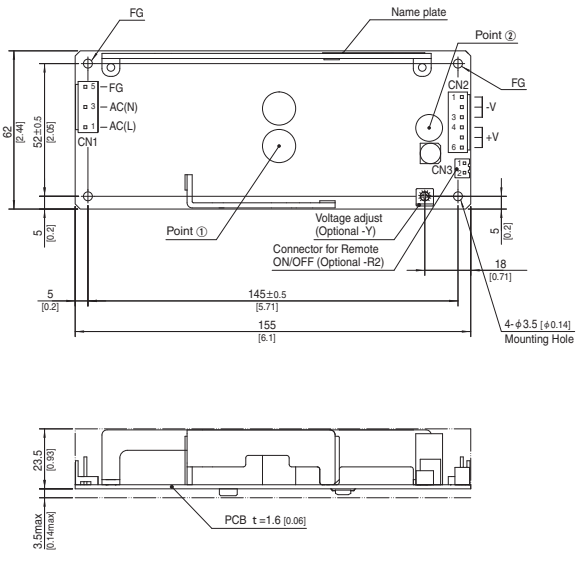

Chassis and cover type

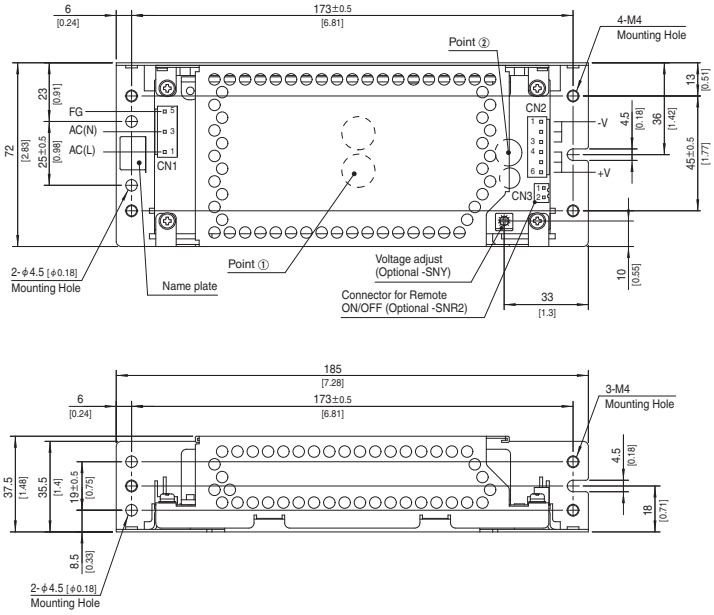

※ The back side of PCB of the power supply is assembled some SMDs.
Be careful not to bump against the attached area by vibration.
※ Use the spacer of 8mm [0.31] length or more for isolation.
And do not use press-fitting bush.
※ Point ①, Point ② are thermometry points. Please refer to Instruction Manual 3.

I/O Connector		Mating connector	Terminal	
CN1	B3P5-VH	VHR-5N	Chain	SVH-21T-P1.1
			Loose	BVH-21T-P1.1
CN2	B6P-VH	VHR-6N	Chain	SVH-21T-P1.1
			Loose	BVH-21T-P1.1

(Mfr: J.S.T.)

※ I/O Connector is Mfr.J.S.T.
※ Option:-J4:EP (TE Connectivity) connector type.

※ Dimensions in mm, [ ]=inches
※ Tolerance : ±1 [±0.04]
※ Weight : 250g max (with chassis and cover : 450g max)
※ PCB Material / thickness : FR-4 / 1.6mm [0.06]
※ Optional chassis and cover material : Galvanizing steel board
※ Mounting torque (Mounting hole of chassis) : 1.5N･m max

CN1

Pin No.	Input
1	AC(L)
2	
3	AC(N)
4	
5	FG

CN2

Pin No.	Output
1 to 3	-V
4 to 6	+V

CN3 Option (Mfr:J.S.T.)

PIN No.	Contents
1	RC(+)
2	RC(-)

Model B2B-XH-A
Mating Connector (Terminal)
XHP-2
(BXH-001T-P0.6 or SXH-001T-P0.6)

※ Pin No.2 and 4 is NC at CN1.
※ Keep drawing current per pin below 5A for CN2.

Downloaded from Arrow.com.

COSEL AC-DC Power Supplies Open Frame

LHA150F

Ordering information

LH	A	150	F	-□□	-□
①	②	③	④	⑤	⑥

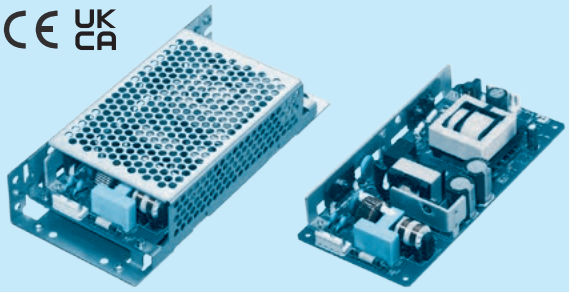

Example recommended EMI/EMC filter
EAC-03-472

High voltage pulse noise type : EAP series
Low leakage current type : EAM series

＊A higher current rating EMI/EMC filter may be recommended in view of the other devices that could be connected in parallel with the power supply.

①Series name
②Single output
③Output wattage
④Universal input
⑤Output voltage
⑥Optional ＊1
C : with Coating
G : Low leakage current
J4 : EP (TE Connectivity) connector type
R2 : with Remote ON/OFF
S : with Chassis
SN : with Chassis & cover
U1 : Can be attached the external capacitor unit
Y : with Potentiometer

For option details, refer to Instruction Manual 6.

This power supply is manufactured by SMD technology. The stress to PCB like twisting or bending causes the defect of the unit, so handle the unit with care.
＊Make sure necessary tests will be carried out on your end equipment with the power supply installed in accordance with any required EMC/EMI regulations.

MODEL	LHA150F-12	LHA150F-24	LHA150F-36	LHA150F-48
MAX OUTPUT WATTAGE[W] ＊2	150	151.2	151.2	153.6
DC OUTPUT ＊2	12V 12.5A	24V 6.3A	36V 4.2A	48V 3.2A

SPECIFICATIONS

	MODEL		LHA150F-12	LHA150F-24	LHA150F-36	LHA150F-48
INPUT	VOLTAGE[VAC] ＊2		85 - 264 1φ (Refer to "Derating" and Instruction Manual 1.1)			
	CURRENT[A]	ACIN 100V	1.8typ			
		ACIN 230V	0.8typ			
	FREQUENCY[Hz]		50 / 60 (45 - 66)			
	EFFICIENCY[%]	ACIN 100V	86.5typ	89.0typ	89.5typ	90.0typ
		ACIN 230V	89.5typ	92.0typ	92.5typ	93.0typ
	POWER FACTOR (Io=100%)	ACIN 100V	0.99typ			
		ACIN 230V	0.91typ			
	INRUSH CURRENT[A]	ACIN 100V	15typ (Io=100%) Ta=25℃ at cold start			
		ACIN 230V	35typ (Io=100%) Ta=25℃ at cold start			
	LEAKAGE CURRENT[mA]		0.40 / 0.75max (ACIN 100V / 240V 60Hz, Io=100%, According to IEC62368-1 and DEN-AN)			
OUTPUT	VOLTAGE[V]		12	24	36	48
	CURRENT[A] ＊2		12.5	6.3	4.2	3.2
	LINE REGULATION[mV] ＊3		48max	96max	144max	192max
	LOAD REGULATION[mV] ＊3		100max	150max	240max	240max
	RIPPLE[mVp-p] ＊4	0 to +50℃＊7	120max	120max	150max	150max
		-10 to 0℃	160max	160max	200max	200max
		Io=0 to 10%	160max	160max	200max	200max
	RIPPLE NOISE[mVp-p] ＊4	0 to +50℃＊7	150max	150max	250max	250max
		-10 to 0℃	180max	180max	300max	300max
		Io=0 to 10%	230max	230max	300max	300max
	TEMPERATURE REGULATION[mV]	0 to +50℃ ＊7	120max	240max	360max	480max
		-10 to +50℃＊7	150max	290max	450max	600max
	DRIFT[mV] ＊5		48max	96max	144max	192max
	START-UP TIME[ms]		700typ (ACIN 100V, Io=100%)			
	HOLD-UP TIME[ms]		20typ (ACIN 100V, Io=100%)			
	OUTPUT VOLTAGE ADJUSTMENT RANGE[V]		Fixed ("Y"option is available for adjusting output voltage between +10%, -5%)			
	OUTPUT VOLTAGE SETTING[V]		11.50 to 12.50	23.00 to 25.00	34.50 to 37.50	46.00 to 50.00
PROTECTION CIRCUIT AND OTHERS	OVERCURRENT PROTECTION		Works over 105% of rating and recovers automatically			
	OVERVOLTAGE PROTECTION		13.80 to 16.80	27.60 to 33.60	41.40 to 50.40	55.20 to 67.20
	OPERATING INDICATION		Not provided			
	REMOTE SENSING		Not provided			
	REMOTE ON/OFF		Option (Refer to Instruction Manual 6.1)			
ISOLATION	INPUT-OUTPUT·RC ＊8		AC3,000V 1minute, Cutoff current = 10mA, DC500V 100MΩ min (At Room Temperature)			
	INPUT-FG		AC2,000V 1minute, Cutoff current = 10mA, DC500V 100MΩ min (At Room Temperature)			
	OUTPUT·RC-FG ＊8		AC500V 1minute, Cutoff current = 25mA, DC500V 100MΩ min (At Room Temperature)			
	OUTPUT-RC ＊8		AC100V 1minute, Cutoff current = 25mA, DC100V 10MΩ min (At Room Temperature)			
ENVIRONMENT	OPERATING TEMP.,HUMID.AND ALTITUDE ＊2		-10 to +70℃, 20 - 90%RH (Non condensing), 5,000m (16,500feet) max (EN62477-1 (OVC III) : 2,000m (6,600feet) max)			
	STORAGE TEMP.,HUMID.AND ALTITUDE		-20 to +75℃, 20 - 90%RH (Non condensing), 9,000m (30,000feet) max			
	VIBRATION		10 - 55Hz, 19.6m/s² (2G), 3minutes period, 60minutes each along X, Y and Z axis			
	IMPACT		196.1m/s² (20G), 11ms, once each X, Y and Z axis			
SAFETY AND NOISE REGULATIONS	AGENCY APPROVALS		UL62368-1, C-UL (equivalent to CAN/CSA-C22.2 No.62368-1), EN62368-1, EN62477-1 (OVC III), Complies with DEN-AN			
	CONDUCTED NOISE		Complies with FCC-B, VCCI-B, CISPR11-B, CISPR32-B, EN55011-B, EN55032-B			
	HARMONIC ATTENUATOR ＊6		Complies with IEC61000-3-2 (Class A)			
OTHERS	CASE SIZE/WEIGHT		75×27×160mm [2.95×1.07×6.30 inches] (W×H×D) / 320g max (with chassis & cover : 570g max)			
	COOLING METHOD ＊2		Convection/Forced air (Requires external fan) (Refer to "Derating")			

＊1 The listed options may affect the published standard specifications. Please contact us for detailed product specifications.
＊2 Derating is required.
＊3 At low load conditions, the burst mode operation will start. To check load regulation, you will need to measure the characteristics at average mode with instruments.
＊4 This is the value that measured on measuring board with capacitor of 22μF and 0.1μF at 150mm from output terminal. Measured by 20MHz oscilloscope or Ripple-Noise meter (Equivalent to KEISOKU-GIKEN:RM104).
Ripple and ripple noise spec is change at Io=0 to 10% by burst operation.
＊5 Drift is the change in DC output for an eight hour period after a half-hour warm-up at 25℃, with the input voltage held constant at the rated input/output.
＊6 Please contact us about another class.
＊7 12V output product, the maximum temperature of 40℃.
＊8 Applicable when Remote ON/OFF (optional) is added.
＊ To meet the specification, do not operate overload condition.
＊ Parallel operation is not possible.
＊ Sound noise may be generated by power supply in case of pulse load.

Downloaded from Arrow.com.

Block diagram

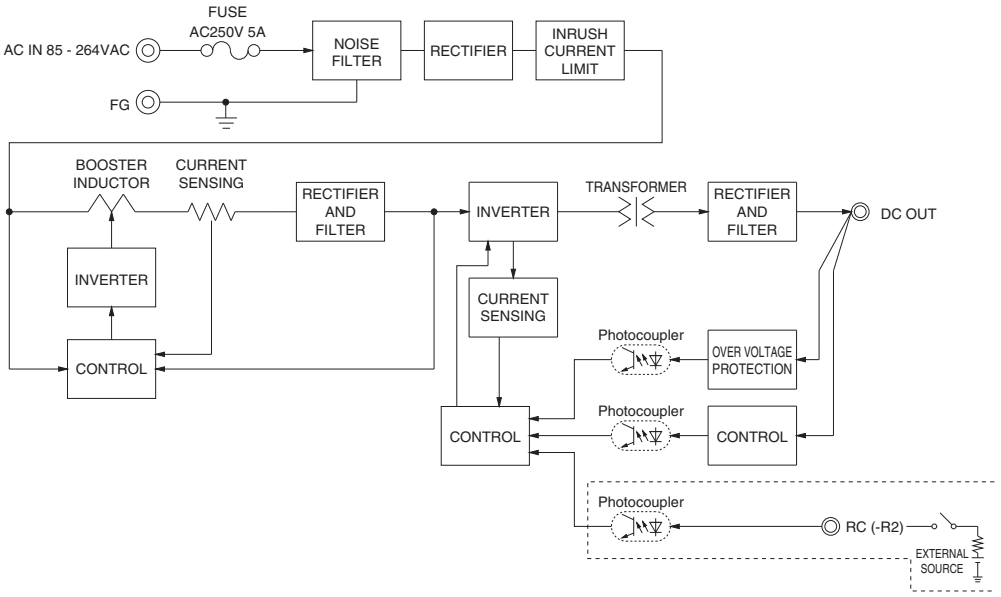

External view

※ External size of option is different from standard type.

Standard type

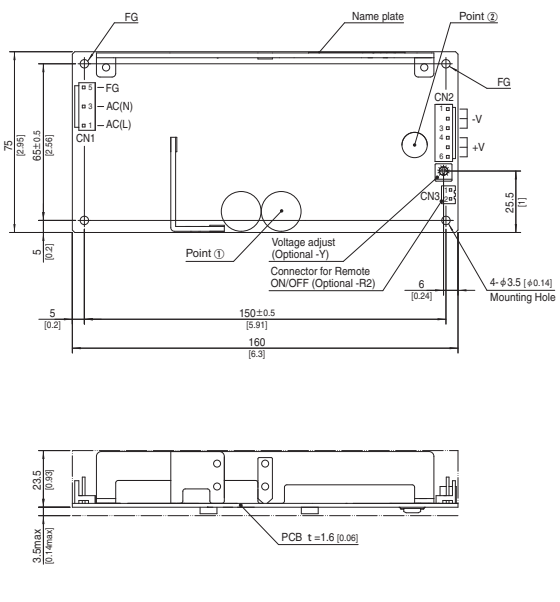

Chassis and cover type

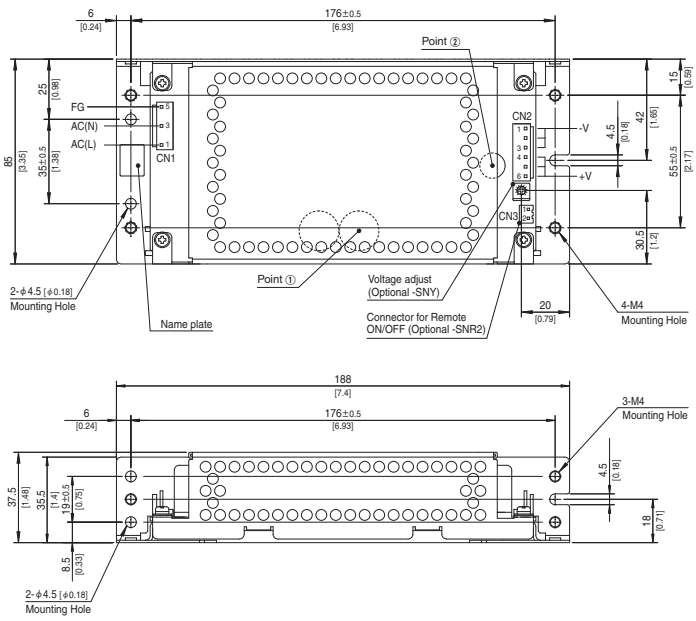

※ The back side of PCB of the power supply is assembled some SMDs.
Be careful not to bump against the attached area by vibration.
※ Use the spacer of 8mm [0.31] length or more for isolation.
And do not use press-fitting bush.
※ Point ①, Point ② are thermometry points. Please refer to Instruction Manual 3.

I/O Connector		Mating connector	Terminal	
CN1	B3P5-VH	VHR-5N	Chain	SVH-21T-P1.1
			Loose	BVH-21T-P1.1
CN2	B6P-VH	VHR-6N	Chain	SVH-21T-P1.1
			Loose	BVH-21T-P1.1

(Mfr: J.S.T.)

※ I/O Connector is Mfr.J.S.T.
※ Option:-J4:EP (TE Connectivity) connector type.

※ Dimensions in mm, [ ]=inches
※ Tolerance : ±1 [±0.04]
※ Weight : 320g max (with chassis and cover : 570g max)
※ PCB Material / thickness : FR-4 / 1.6mm [0.06]
※ Optional chassis and cover material : Galvanizing steel board
※ Mounting torque (Mounting hole of chassis) : 1.5N･m max

CN1

Pin No.	Input
1	AC(L)
2	
3	AC(N)
4	
5	FG

CN2

Pin No.	Output
1 to 3	-V
4 to 6	+V

CN3 Option (Mfr:J.S.T.)

PIN No.	Contents
1	RC(+)
2	RC(-)

Model B2B-XH-A
Mating Connector (Terminal)
XHP-2
(BXH-001T-P0.6 or SXH-001T-P0.6)

※ Pin No.2 and 4 is NC at CN1.
※ Keep drawing current per pin below 5A for CN2.

Downloaded from Arrow.com.

COSEL AC-DC Power Supplies Open Frame

LHA300F

Ordering information

LH	A	300	F	-□□	-□
①	②	③	④	⑤	⑥

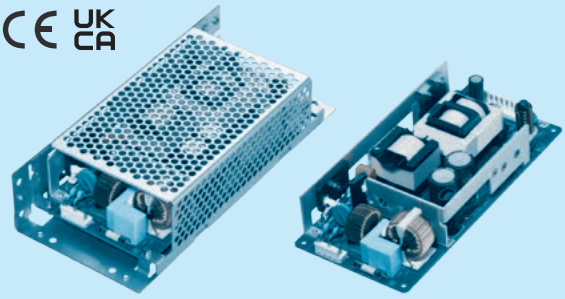

Example recommended EMI/EMC filter
EAC-06-472

High voltage pulse noise type : EAP series
Low leakage current type : EAM series

＊A higher current rating EMI/EMC filter may be recommended in view of the other devices that could be connected in parallel with the power supply.

①Series name
②Single output
③Output wattage
④Universal input
⑤Output voltage
⑥Optional ＊1
C : with Coating
G : Low leakage current
J4 : EP (TE Connectivity) connector type
J5 : 8 pin type(Output connector)
R2 : with Remote ON/OFF
S : with Chassis
SN: with Chassis & cover
T : Terminal block type
T4: Push-in Terminal block type
U1: Can be attached the external capacitor unit

For option details, refer to Instruction Manual 6.

This power supply is manufactured by SMD technology. The stress to PCB like twisting or bending causes the defect of the unit, so handle the unit with care.
＊Make sure necessary tests will be carried out on your end equipment with the power supply installed in accordance with any required EMC/EMI regulations.

MODEL	LHA300F-12-Y	LHA300F-24-Y	LHA300F-48-Y
MAX OUTPUT WATTAGE[W] ＊2	300	300	302.4
DC OUTPUT ＊2	12V 25A	24V 12.5A	48V 6.3A

SPECIFICATIONS

	MODEL		LHA300F-12-Y	LHA300F-24-Y	LHA300F-48-Y
INPUT	VOLTAGE[VAC] ＊2		85 - 264 1 ϕ (Refer to “Derating” and Instruction Manual 1.1)		
	CURRENT[A]	ACIN 100V	3.5typ		
		ACIN 230V	1.6typ		
	FREQUENCY[Hz]		50 / 60 (45 - 66)		
	EFFICIENCY[%]	ACIN 100V	90.0typ	91.5typ	92.0typ
		ACIN 230V	92.0typ	93.5typ	94.0typ
	POWER FACTOR (Io=100%)	ACIN 100V	0.99typ		
		ACIN 230V	0.93typ		
	INRUSH CURRENT[A]	ACIN 100V	20typ (Io=100%) Ta=25℃ at cold start		
		ACIN 230V	40typ (Io=100%) Ta=25℃ at cold start		
	LEAKAGE CURRENT[mA]		0.40 / 0.75max (ACIN 100V / 240V 60Hz, Io=100%, According to IEC62368-1 and DEN-AN)		
OUTPUT	VOLTAGE[V]		12	24	48
	CURRENT[A] ＊2		25.0	12.5	6.3
	LINE REGULATION[mV] ＊3		48max	96max	192max
	LOAD REGULATION[mV] ＊3		100max	150max	240max
	RIPPLE[mVp-p] ＊4	0 to +50℃ ＊7	120max	120max	150max
		-10 to 0℃	160max	160max	200max
		Io=0 to 10%	160max	160max	200max
	RIPPLE NOISE[mVp-p] ＊4	0 to +50℃ ＊7	150max	150max	250max
		-10 to 0℃	180max	180max	300max
		Io=0 to 10%	180max	180max	300max
	TEMPERATURE REGULATION[mV]	0 to +50℃ ＊7	120max	240max	480max
		-10 to +50℃ ＊7	150max	290max	600max
	DRIFT[mV] ＊5		48max	96max	192max
	START-UP TIME[ms]		700typ (ACIN 100V, Io=100%)		
	HOLD-UP TIME[ms]		25typ (ACIN 100V, Io=100%)		
	OUTPUT VOLTAGE ADJUSTMENT RANGE[V]		11.40 to 13.20	22.80 to 26.40	45.60 to 52.80
	OUTPUT VOLTAGE SETTING[V]		12.00 to 12.48	24.00 to 24.96	48.00 to 49.92
PROTECTION CIRCUIT AND OTHERS	OVERCURRENT PROTECTION		Works over 105% of rating and recovers automatically		
	OVERVOLTAGE PROTECTION		13.80 to 16.80	27.60 to 33.60	55.20 to 67.20
	OPERATING INDICATION		Not provided		
	REMOTE SENSING		Not provided		
	REMOTE ON/OFF		Option (Refer to Instruction Manual 6.1)		
ISOLATION	INPUT-OUTPUT·RC ＊8		AC3,000V 1minute, Cutoff current = 10mA, DC500V 100MΩ min (At Room Temperature)		
	INPUT-FG		AC2,000V 1minute, Cutoff current = 10mA, DC500V 100MΩ min (At Room Temperature)		
	OUTPUT·RC-FG ＊8		AC500V 1minute, Cutoff current = 25mA, DC500V 100MΩ min (At Room Temperature)		
	OUTPUT-RC ＊8		AC100V 1minute, Cutoff current = 25mA, DC100V 10MΩ min (At Room Temperature)		
ENVIRONMENT	OPERATING TEMP.,HUMID.AND ALTITUDE ＊2		-10 to +70℃, 20 - 90%RH (Non condensing), 5,000m (16,500feet) max (EN62477-1 (OVC III) : 2,000m (6,600feet) max)		
	STORAGE TEMP.,HUMID.AND ALTITUDE		-20 to +75℃, 20 - 90%RH (Non condensing), 9,000m (30,000feet) max		
	VIBRATION		10 - 55Hz, 19.6m/s² (2G), 3minutes period, 60minutes each along X, Y and Z axis		
	IMPACT		196.1m/s² (20G), 11ms, once each X, Y and Z axis		
SAFETY AND NOISE REGULATIONS	AGENCY APPROVALS		UL62368-1, C-UL (equivalent to CAN/CSA-C22.2 No.62368-1), EN62368-1, EN62477-1 (OVC III), Complies with DEN-AN		
	CONDUCTED NOISE		Complies with FCC-B, VCCI-B, CISPR11-B, CISPR32-B, EN55011-B, EN55032-B		
	HARMONIC ATTENUATOR ＊6		Complies with IEC61000-3-2 (Class A)		
OTHERS	CASE SIZE/WEIGHT		84×37×180mm [3.31×1.46×7.09 inches] (W×H×D) / 580g max (with chassis & cover : 890g max)		
	COOLING METHOD ＊2		Convection/Forced air (Requires external fan) (Refer to “Derating”)		

＊1 The listed options may affect the published standard specifications. Please contact us for detailed product specifications.
＊2 Derating is required.
＊3 At low load conditions, the burst mode operation will start. To check load regulation, you will need to measure the characteristics at average mode with instruments.
＊4 This is the value that measured on measuring board with capacitor of 22μF and 0.1μF at 150mm from output terminal. Measured by 20MHz oscilloscope or Ripple-Noise meter (Equivalent to KEISOKU-GIKEN:RM104).
Ripple and ripple noise spec is change at Io=0 to 10% by burst operation.
＊5 Drift is the change in DC output for an eight hour period after a half-hour warm-up at 25℃, with the input voltage held constant at the rated input/output.
＊6 Please contact us about another class.
＊7 12V output product, the maximum temperature of 35℃.
＊8 Applicable when Remote ON/OFF (optional) is added.
＊ To meet the specification, do not operate overload condition.
＊ Parallel operation is not possible.
＊ Sound noise may be generated by power supply in case of pulse load.

Downloaded from Arrow.com.

Block diagram

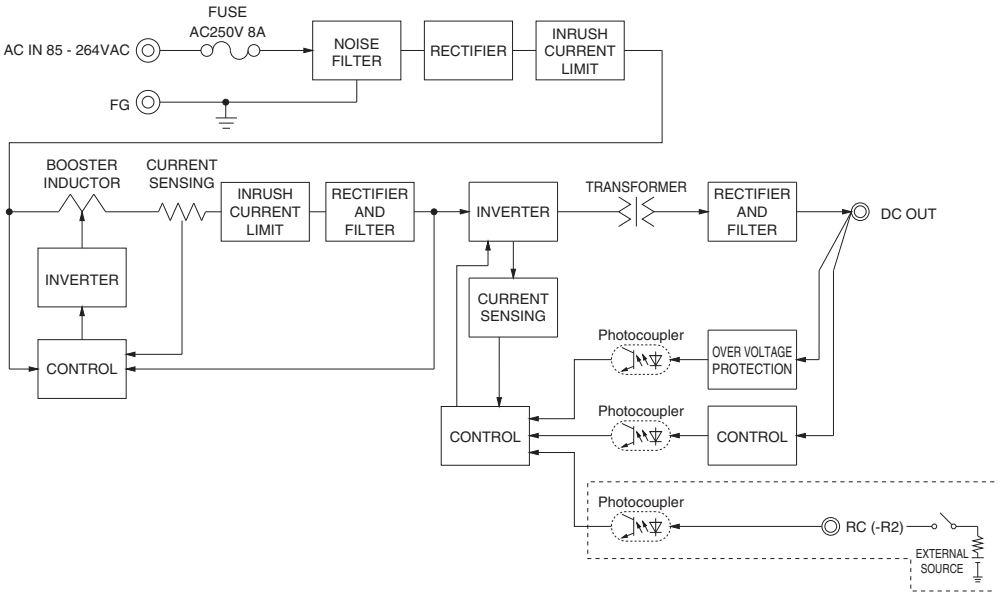

External view

※ External size of option is different from standard type.

Standard type

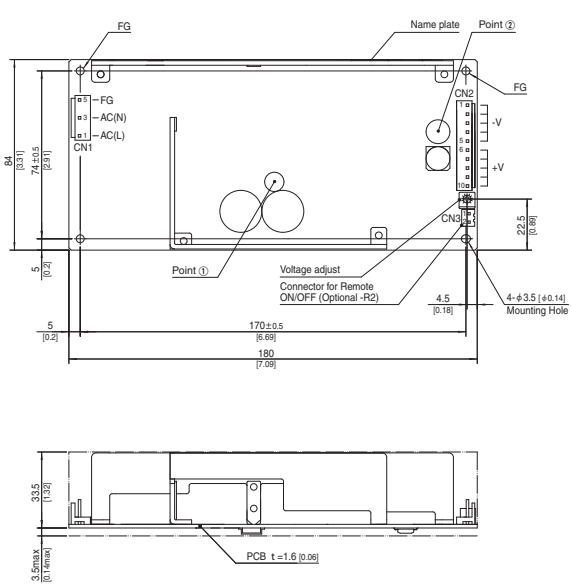

Chassis and cover type

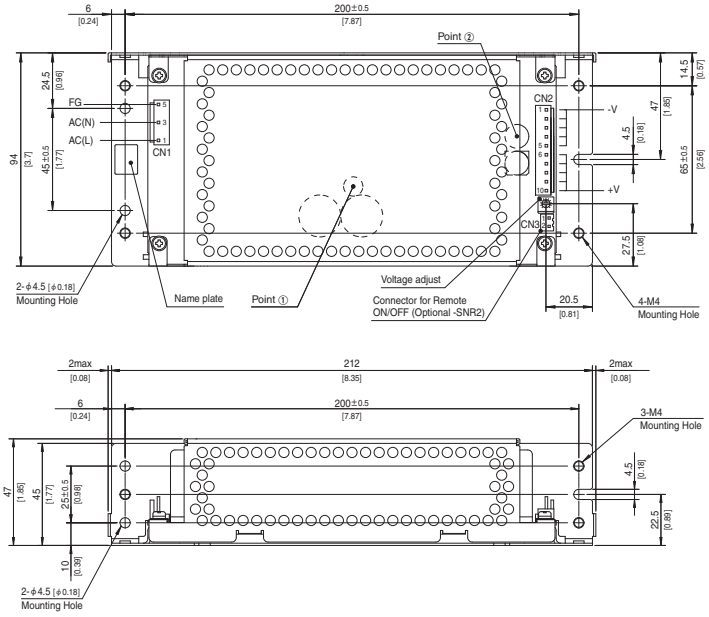

※ The back side of PCB of the power supply is assembled some SMDs.
Be careful not to bump against the attached area by vibration.
※ Use the spacer of 8mm [0.31] length or more for isolation.
And do not use press-fitting bush.
※ Point ①, Point ② are thermometry points. Please refer to Instruction Manual 3.

I/O Connector		Mating connector	Terminal	
CN1	B3P5-VH	VHR-5N	Chain	SVH-21T-P1.1
			Loose	BVH-21T-P1.1
CN2	B10P-VH	VHR-10N	Chain	SVH-21T-P1.1
			Loose	BVH-21T-P1.1

(Mfr: J.S.T.)

※ I/O Connector is Mfr.J.S.T.
※ Option:-J4:EP (TE Connectivity) connector type.
※ Option:-J5:Output connector as 8 pin type.

※ Dimensions in mm, [ ]=inches
※ Tolerance : ±1 [±0.04]
※ Weight : 580g max (with chassis and cover : 890g max)
※ PCB Material / thickness : FR-4 / 1.6mm [0.06]
※ Optional chassis and cover material : Galvanizing steel board
※ Mounting torque (Mounting hole of chassis) : 1.5N･m max

CN1

Pin No.	Input
1	AC(L)
2	
3	AC(N)
4	
5	FG

※ Pin No.2 and 4 is NC at CN1.
※ Keep drawing current per pin below 5A for CN2.

CN2

Pin No.	Output
1 to 5	-V
6 to 10	+V

CN3 Option (Mfr:J.S.T.)

PIN No.	Contents
1	RC(+)
2	RC(-)

Model B2B-XH-A
Mating Connector (Terminal)
XHP-2
(BXH-001T-P0.6 or SXH-001T-P0.6)

Downloaded from Arrow.com.

Assembling and Installation Method

Installation method

■This power supply is manufactured by SMD technology. Do not touch any SMD components on the unit. Be especially careful when handling.

■If using a metal chassis, keep proper insulation between the component and metal chassis, use the spacer of 8mm or more between bottom of power supply and metal chassis.
If d1 and/or d2 are less than the value mentioned in right figure, insert an insulating sheet with reinforced insulation between the power supply unit and metal chassis.
The following distance is not satisfactory for cooling condition. Please refer to “Derating” and Instruction Manual 3 for cooling method.

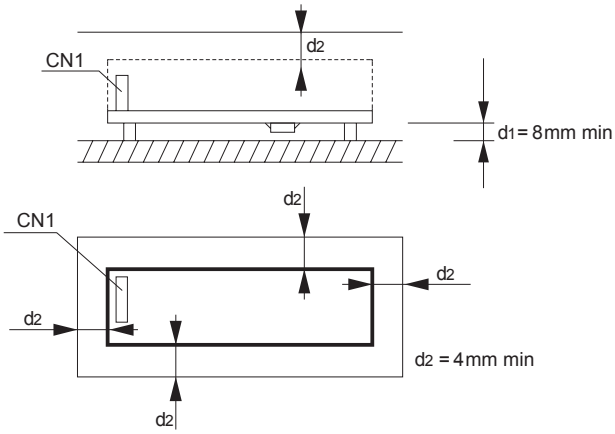

■There is a possibility that it is not possible to cool enough when the power supply is used by the sealing up space as showing in right figure.
Please use it after confirming the temperature of points ① and points ② of Instraction Manual 3.

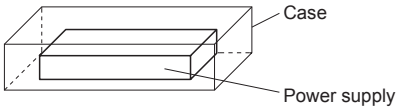

■Installation method shown right is possible.

■In optional -SN, Method (F) is not available with convection cooling. If method (F) is used, use with forced air cooling or derate temperature / load. For more details, please contact us.

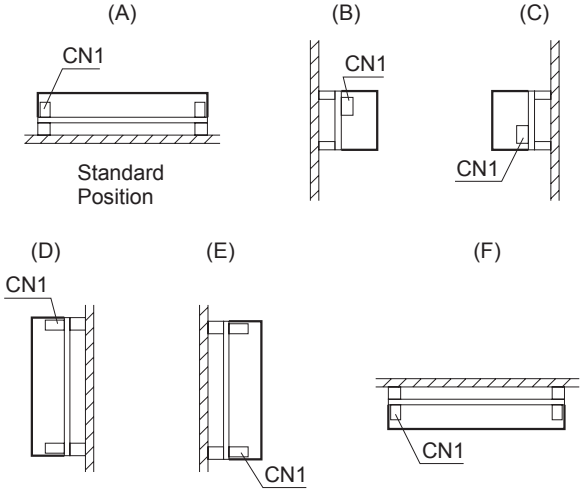

Mounting screw

■The mounting screw should be ϕ3mm. The hatched area shows the allowance of metal parts for mounting.

● LHA10F, LHA15F, LHA30F

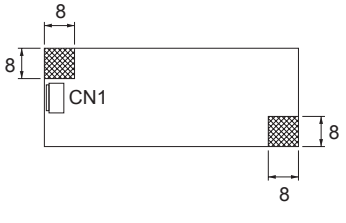

Unit [mm]

● LHA50F, LHA75F, LHA100F, LHA150F, LHA300F

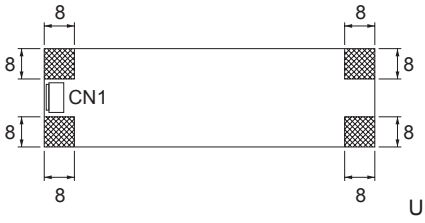

Unit [mm]

■If mounting metallic fittings on the board surface, ensure there is no contact with components.
■This product uses SMD technology. Please avoid the PCB installation method which includes the twisting stress or the bending stress.

Downloaded from Arrow.com.

Derating

Derating curve for input voltage

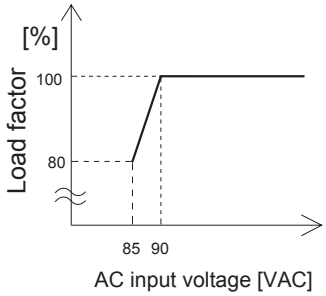

LHA10F-3R3-Y,-5,-12 Ambient temperature derating curve (Reference value)

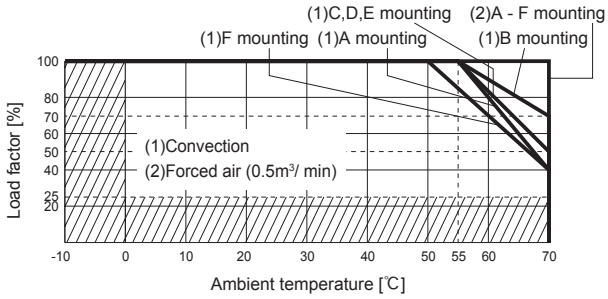

LHA10F-15,-24 Ambient temperature derating curve (Reference value)

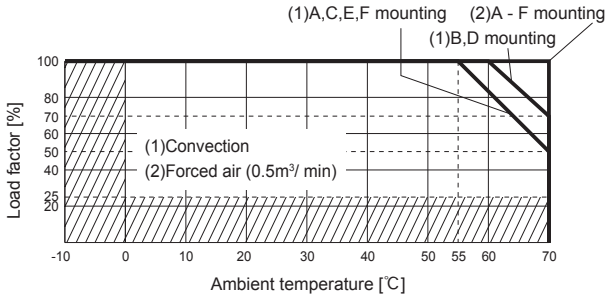

LHA10F-3R3-SNY,-5-SN,-12-SN Ambient temperature derating curve (Reference value)

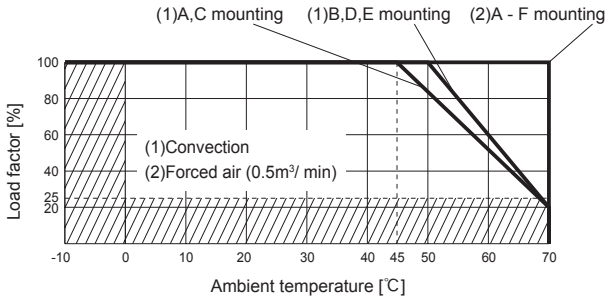

LHA10F-15-SN,-24-SN Ambient temperature derating curve (Reference value)

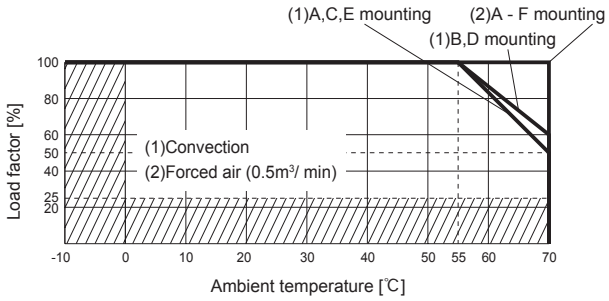

LHA15F-3R3-Y,-5,-12 Ambient temperature derating curve (Reference value)

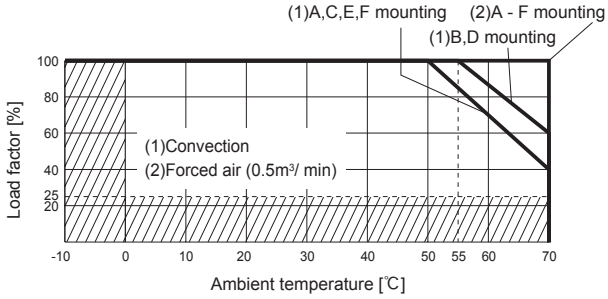

LHA15F-15,-24 Ambient temperature derating curve (Reference value)

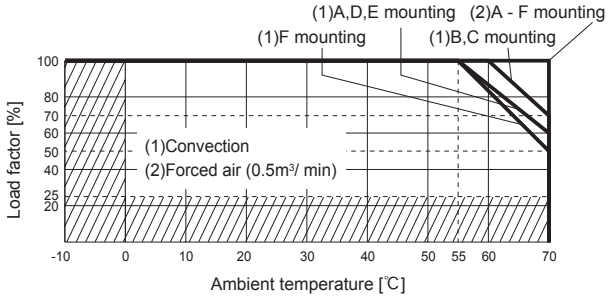

Downloaded from Arrow.com.

Derating

● LHA15F-3R3-SNY,-5-SN,-12-SN Ambient temperature derating curve (Reference value)

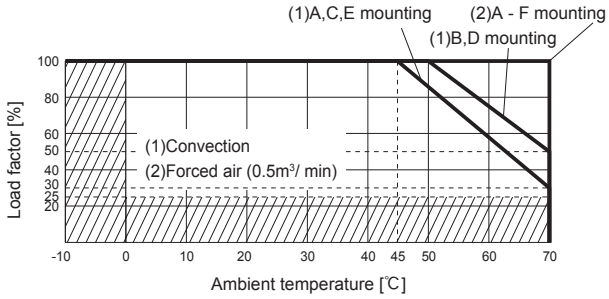

● LHA15F-15-SN,-24-SN Ambient temperature derating curve (Reference value)

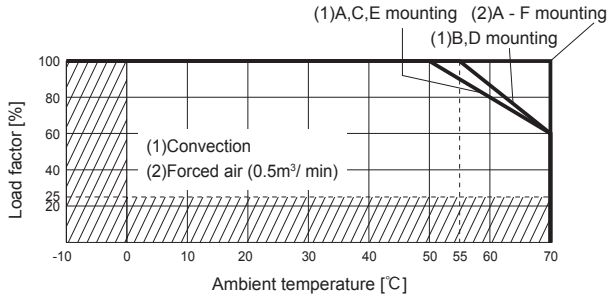

● LHA30F-3R3-Y,-5,-12,-15,-24 Ambient temperature derating curve (Reference value)

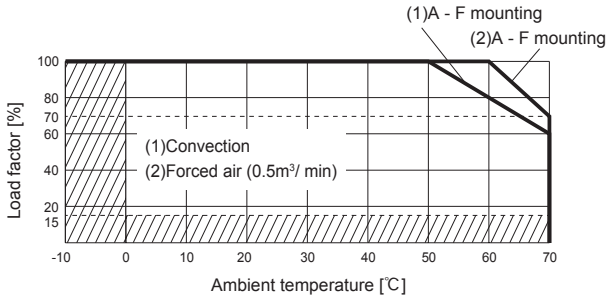

● LHA30F-3R3-SNY,-5-SN,-12-SN,-15-SN,-24-SN Ambient temperature derating curve (Reference value)

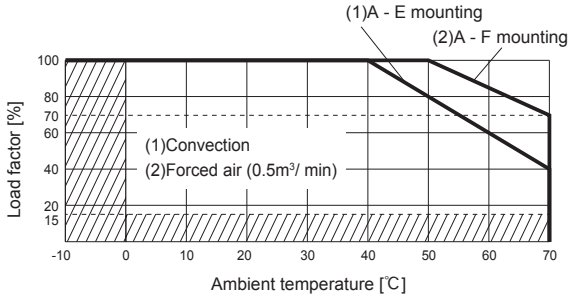

● LHA50F-3R3-Y, -5, -24, -36, -48 Ambient temperature derating curve (Reference value)

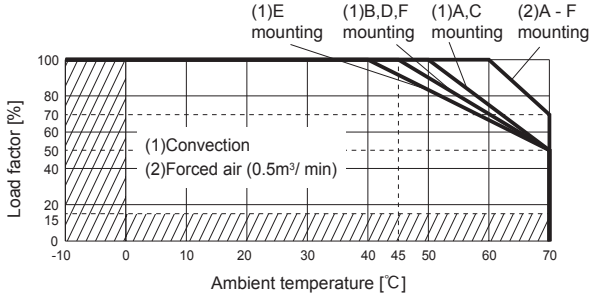

● LHA50F-12, -15 Ambient temperature derating curve (Reference value)

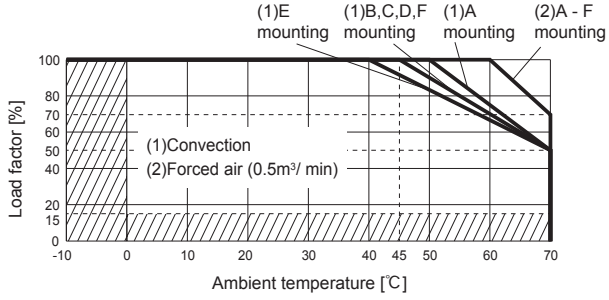

Downloaded from Arrow.com.

Derating

● LHA50F-3R3-SNY,-12-SN,-24-SN,-36-SN,-48-SN Ambient temperature derating curve (Reference value)

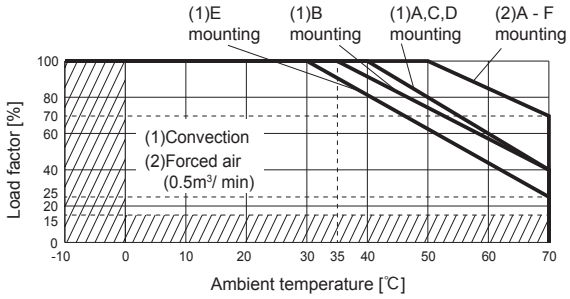

● LHA50F-5-SN,-15-SN Ambient temperature derating curve (Reference value)

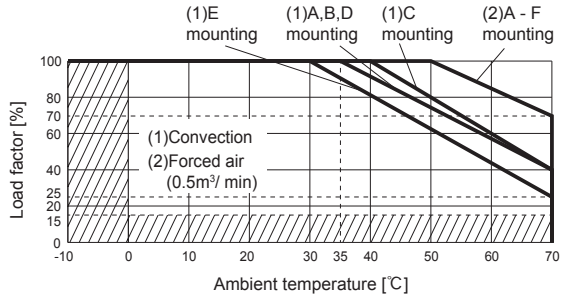

● LHA75F-3R3-Y, -5 Ambient temperature derating curve (Reference value)

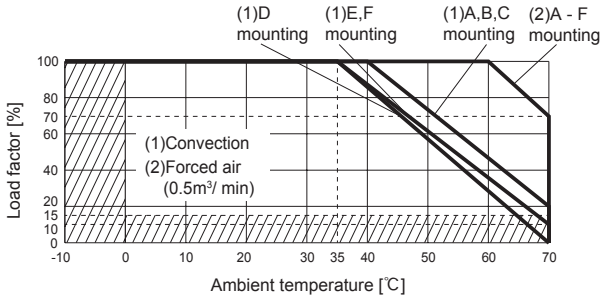

● LHA75F-12, -15, -24, -36, -48 Ambient temperature derating curve (Reference value)

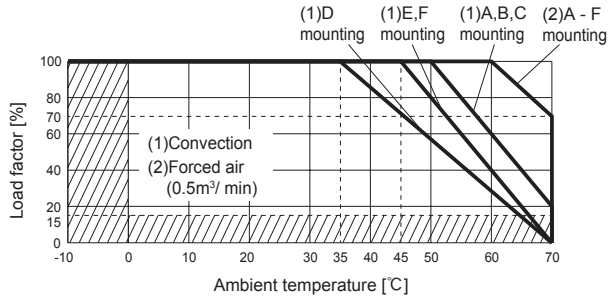

● LHA75F-3R3-SNY,-5-SN Ambient temperature derating curve (Reference value)

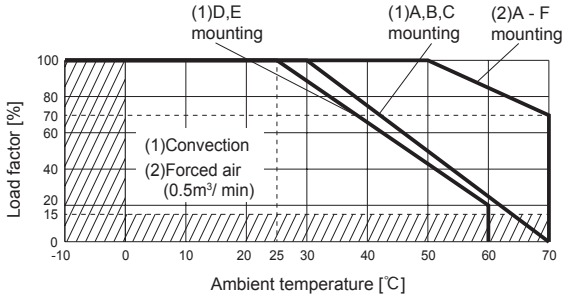

● LHA75F-12-SN,-15-SN,-24-SN,-36-SN,-48-SN Ambient temperature derating curve (Reference value)

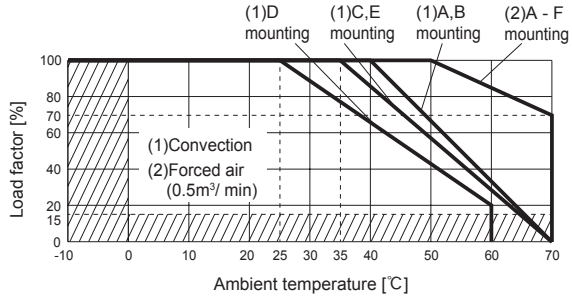

● LHA100F-5 Ambient temperature derating curve (Reference value)

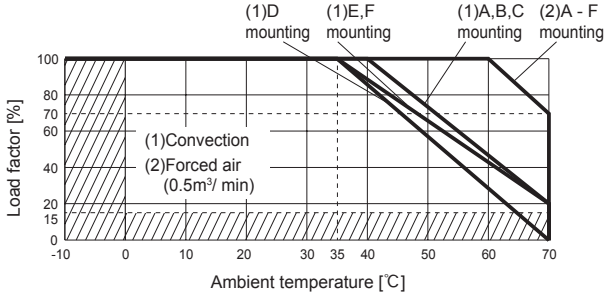

● LHA100F-12, -15, -24, -36, -48 Ambient temperature derating curve (Reference value)

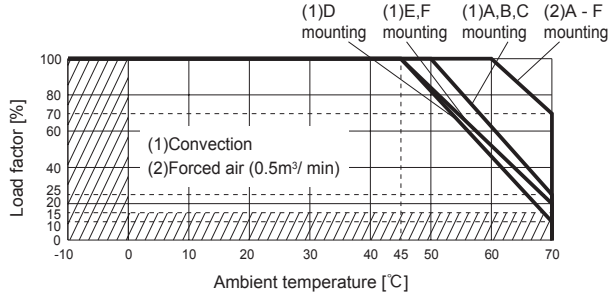

Downloaded from Arrow.com.

Derating

● LHA100F-5-SN
Ambient temperature derating curve
(Reference value)

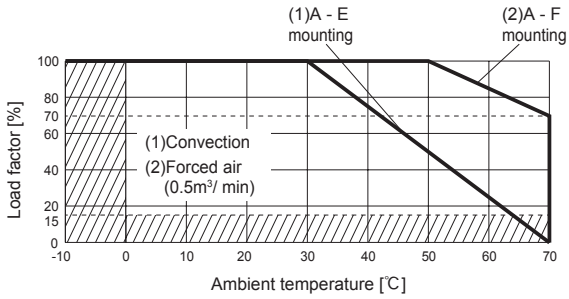

● LHA100F-12-SN,-15-SN,-24-SN,-36-SN,-48-SN
Ambient temperature derating curve
(Reference value)

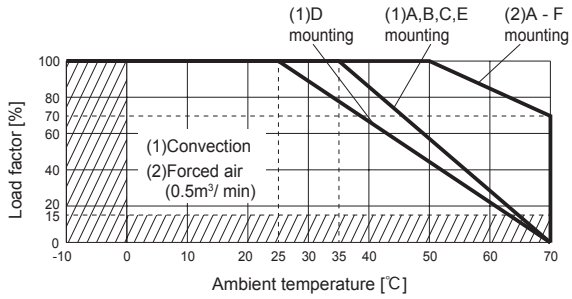

● LHA150F-12
Ambient temperature derating curve
(Reference value)

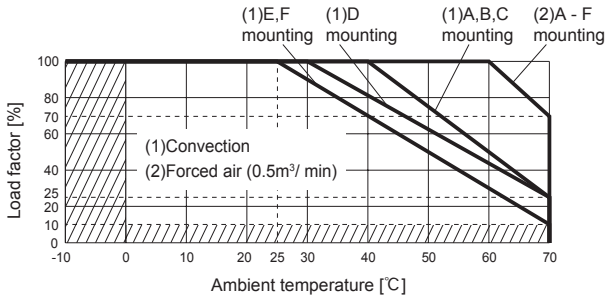

● LHA150F-24, -36, -48
Ambient temperature derating curve
(Reference value)

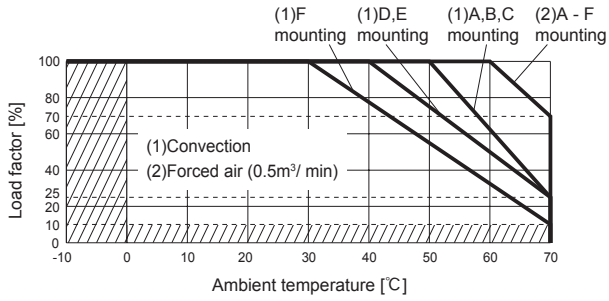

● LHA150F-12-SN
Ambient temperature derating curve
(Reference value)

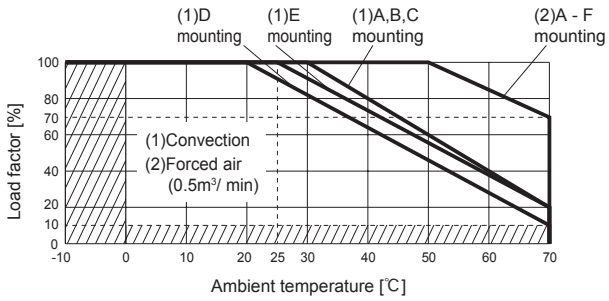

● LHA150F-24-SN, -36-SN, -48-SN
Ambient temperature derating curve
(Reference value)

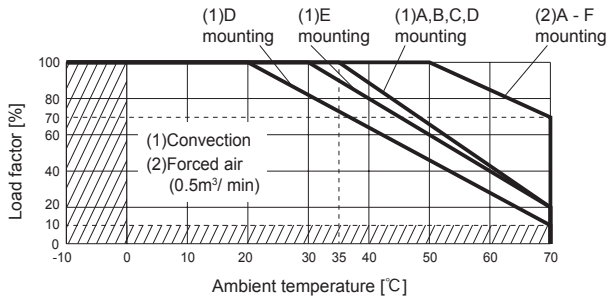

● LHA300F-12-Y
Ambient temperature derating curve
(Reference value)

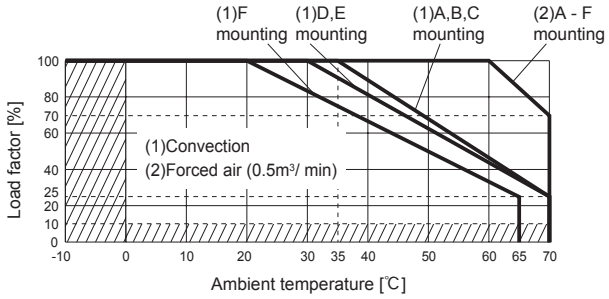

● LHA300F-24-Y, -48-Y
Ambient temperature derating curve
(Reference value)

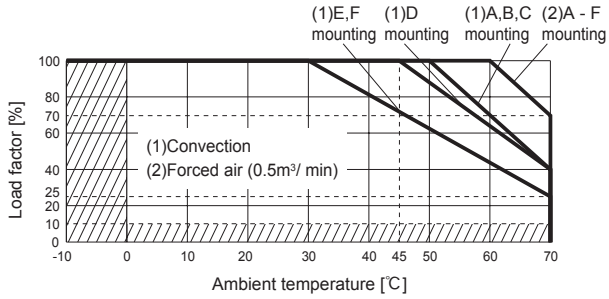

Downloaded from Arrow.com.

Derating

● LHA300F-12-SNY Ambient temperature derating curve (Reference value)

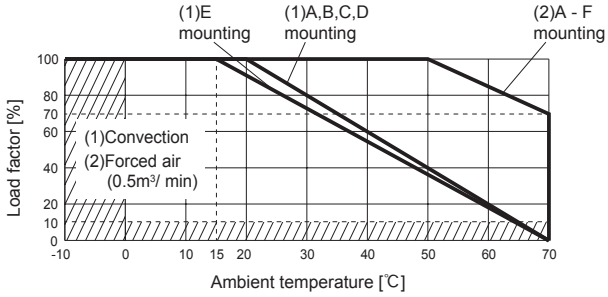

● LHA300F-24-SNY, -48-SNY Ambient temperature derating curve (Reference value)

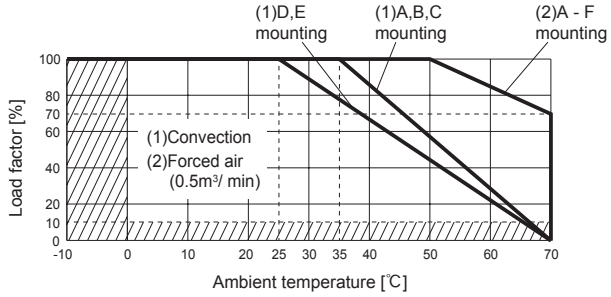

■The operating ambient temperature is different by with / without chassis cover or mounting position.
■In the hatched area, the specification of Ripple, Ripple Noise is different from other area.
■The ambient temperature should be measured 5 to 10 cm away from the power supply so that it won't be influenced by the heat from the power supply.
■Please make sure the maximum component temperature rise given in Instruction manual 3 is not exceeded.
■Please contact us for more information about operating ambient temperature.

Instruction Manuals

◆ Please see catalog and instructionmanual before you use.

Basic Characteristics Data

Model	Circuit method	Switching frequency [kHz] ＊1 ＊2	Input current ＊3 [A]	Inrush current protection	PCB/Pattern			Series/Parallel operation availability	
					Material	Single sided	Double sided	Series operation	Parallel operation
LHA10F	Flyback converter	20 to 125	0.26	Resistance ＊4	CEM-3	Yes	-	Yes	No
LHA15F	Flyback converter	20 to 125	0.35	Thermistor	CEM-3	Yes	-	Yes	No
LHA30F	Flyback converter	30 to 130	0.62	Thermistor	FR-4	-	Yes	Yes	No
LHA50F	Flyback converter	30 to 130	1.05	Thermistor	FR-4	-	Yes	Yes	No
LHA75F	Active filter	15 to 300	0.9	Thermistor	FR-4	-	Yes	Yes	No
	Flyback converter	50 to 140							
LHA100F	Active filter	15 to 300	1.2	Thermistor	FR-4	-	Yes	Yes	No
	Flyback converter	35 to 130							
LHA150F	Active filter	15 to 300	1.8	Thermistor	FR-4	-	Yes	Yes	No
	LLC resonant converter	90 to 280							
LHA300F	Active filter	15 to 300	3.5	Thermistor	FR-4	-	Yes	Yes	No
	LLC resonant converter	65 to 200							

＊1 The value changes depending on input and load.
＊2 At light load, burst operation is performed to reduce input power. The switching frequency is changed by using condition. Please contact us for more details.
＊3 The value of input current is at ACIN 100V and rated load.
＊4 Resistance of the line filter.

Downloaded from Arrow.com.