THIS DRAWING IS UNPUBLISHED. RELEASED FOR PUBLICATION 20
© COPYRIGHT 20 BY - ALL RIGHTS RESERVED.

REVISIONS

P	LTR	DESCRIPTION	DATE	DWN	APVD
	A	INITIAL RELEASE	19SEP2016	DW	CW
	B	ECR-20-016312	04JUN2021	BS	CW

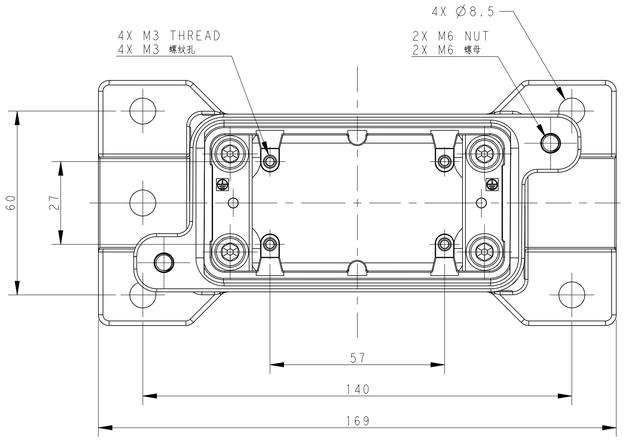

NOTES:
1. TECHNICAL CHARACTERISTICS:
HOUSING MATERIAL: DIE CAST ALUMINIUM ALLOY
SURFACE TREATMENT: SEE TABLE
DEGREE OF PROTECTION: IP68 (MATED)

注释
1.技术参数：
壳体材料： 铝合金
表面处理： 见表格
防护等级： IP68 （配合）

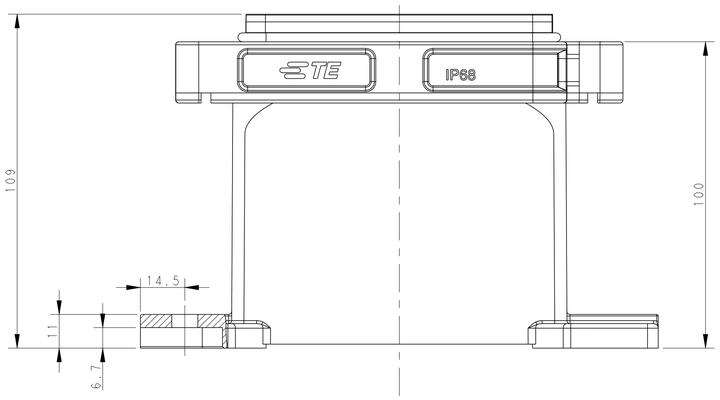

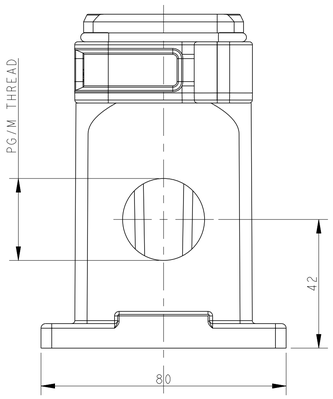

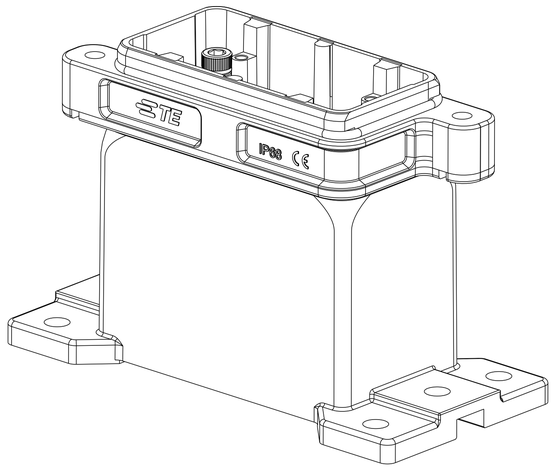

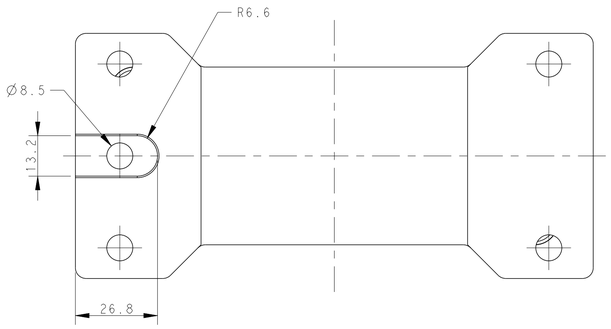

PART NUMBER 料号	PART DESCRIPTION 描述		PG/M THREAD PG/M 螺纹
T1950100132-009	H10BPR-SGRH-M32-EMC-C	H10BPR HOUSING,DIAGONAL LOCKING,SURFACE MOUNTED,SIDE ENTRY M32 POWDER COATED,BLACK / H10BPR 对角锁定表面下壳M32 黑色	M32
T1950100129-009	H10BPR-SGRH-PG29-EMC-C	H10BPR HOUSING,DIAGONAL LOCKING,SURFACE MOUNTED,SIDE ENTRY PG29 POWDER COATED,BLACK / H10BPR 对角锁定表面下壳PG29 黑色	PG29
T1950100125-009	H10BPR-SGRH-M25-EMC-C	H10BPR HOUSING,DIAGONAL LOCKING,SURFACE MOUNTED,SIDE ENTRY M25 POWDER COATED,BLACK / H10BPR 对角锁定表面下壳M25 黑色	M25
T1950100121-009	H10BPR-SGRH-PG21-EMC-C	H10BPR HOUSING,DIAGONAL LOCKING,SURFACE MOUNTED,SIDE ENTRY PG21 POWDER COATED,BLACK / H10BPR 对角锁定表面下壳PG21 黑色	PG21

THIS DRAWING IS A CONTROLLED DOCUMENT.

DIMENSIONS: mm

TOLERANCES UNLESS OTHERWISE SPECIFIED:
0 PLC ±
1 PLC ±
2 PLC ±
3 PLC ±
4 PLC ±
ANGLES ±

MATERIAL - -
FINISH - -

DWN DAVID WANG 19SEP2016
CHK Chris.Wang 19SEP2016
APVD Xiang Xu 19SEP2016
PRODUCT SPEC 108-137191
APPLICATION SPEC 114-137191
WEIGHT -

TE Connectivity

NAME H10BPR-SGRH-PG/M-EMC-C

SIZE A1 | CAGE CODE - | DRAWING NO C-T195010XXXXX09 | RESTRICTED TO

CUSTOMER DRAWING | SCALE 1:1 | SHEET 1 OF 1 | REV B

4805 (3/13)

printed on 8 Jun 2021 09:46 (China Standard Time) from TE296667

Downloaded from Arrow.com.