MICRO SWITCH
FREEPORT ILLINOIS, U.S.A
A DIVISION OF HONEYWELL
FED. MFG. CODE 91929

SWITCH — BASIC

CATALOG LISTING
BZ-7R-P5

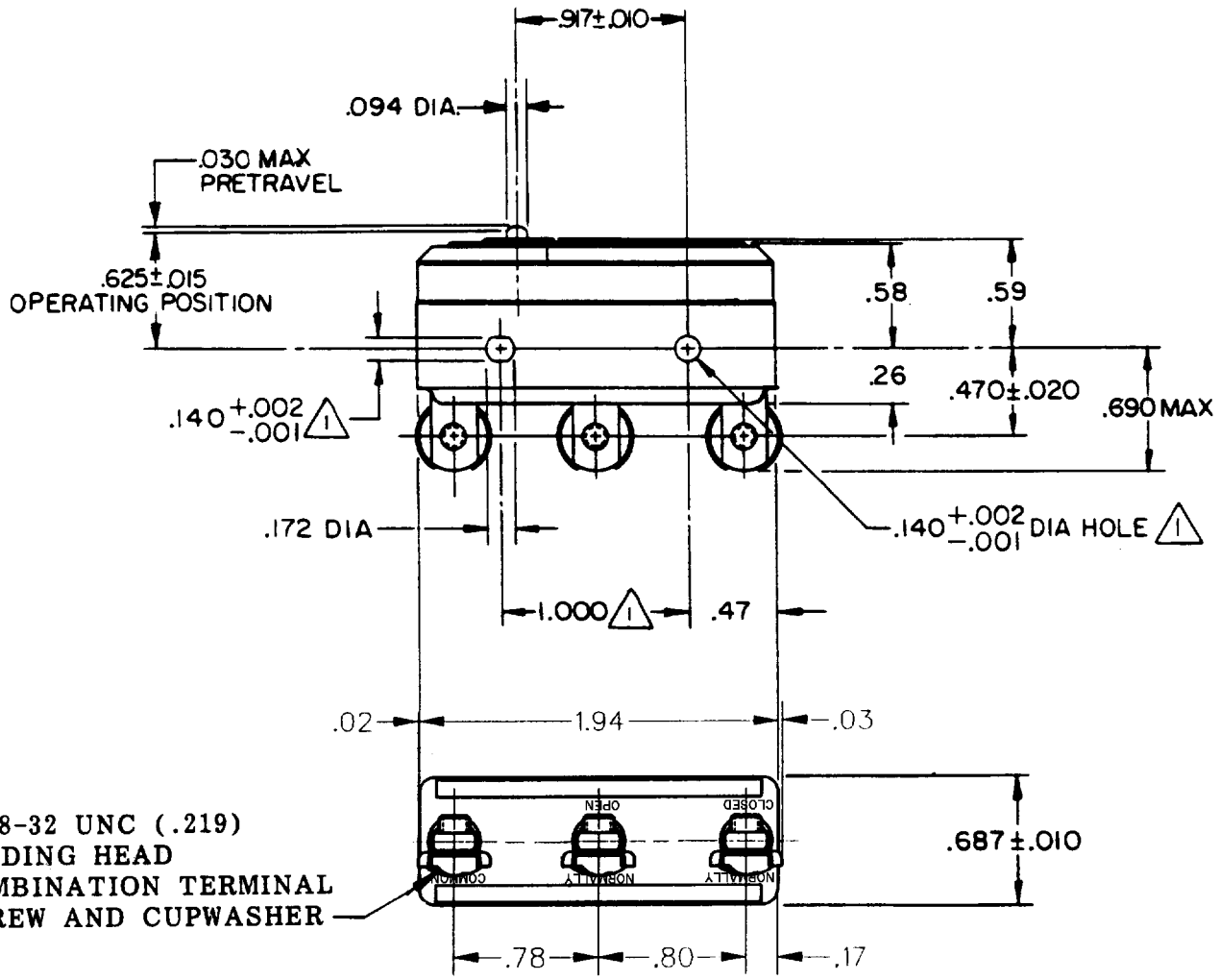

3X 8-32 UNC (.219)
BINDING HEAD
COMBINATION TERMINAL
SCREW AND CUPWASHER

NOTE
1. MOUNTING HOLES WILL ACCEPT PINS OR SCREWS OF .139 MAX DIA ON 1.000±.002 CENTERS

THIS DRAWING COVERS A PROPRIETARY ITEM AND IS THE PROPERTY OF MICRO SWITCH, A DIVISION OF HONEYWELL. THIS DRAWING IS NOT TO BE COPIED OR USED WITHOUT THE APPROVAL OF MICRO SWITCH.

THIRD ANGLE PROJECTION

CHARACTERISTICS

OPERATING FORCE---------- 22-28 OZ

RELEASE FORCE----------4 OZ MIN

DIFFERENTIAL TRAVEL---.0025-.0050

OVERTRAVEL----------.005 MIN

ELECTRICAL DATA

CONTACT ARRANGEMENT
S P D T

L74 15A 125,250,OR 480VAC 2A 600 VAC
1/8 HP 125 VAC, 1/4 HP 250 VAC
1/2A 125 VDC, 1/4A 250 VDC

L288
L299
L306

16A 250V ~ T85 5E4

SCALE FULL

DO NOT SCALE PRINT

TOLERANCES
APPLY TO DESIGN UNITS. CONVERSIONS ARE ONLY FOR REFERENCE. UNLESS NOTED, TOLERANCES ARE ±

	DIM. mm	TOL. mm/m	DIM. in	TOL. mm/m
NO PLACES	X	1/.04		
ONE PLACE	X.X	0.4/.010	X.X	0.8/.03
TWO PLACES	X.XX	0.15/.006	X.XX	0.38/.015
THREE PLACES			X.XXX	0.13/.005
ANGLES				

DESIGN UNITS SI METRIC ☐ US CUSTOMARY ■

WEIGHT .050 LB

BZ-7R-P5 | M | DRAWING NUMBER | 6 | ISSUE | RELEASE NO. PR-16361 | REPLACES

REVISIONS
A CO 71368 JWB 7 JAN 92
B CO-73267-G JAL 20 OCT 93
C CO-75367B KDR 3 MAR 94
D CO-77863 GJW 2 MAY 96
E C093346 DLT 2 SEP 98

CHECK 18 APR 88 JAP CHECK 15 APR 88 TLB DRAWN

FORMTEK FO-52848-A

Downloaded from Arrow.com.