1. Application

This specification applies to the contactless power supply module BWS50-28S1R5.

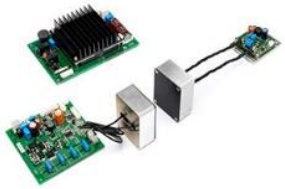

2. Overview

BWS50-28S1R5 is a module designed for power transmission using contactless power transfer technology. The module consists from 3 modules: PFC module, power transmitting module and power receiving module.

Although assumed usage of this product is charging of lithium ion batteries with capacity of 3~10 Ah, it can also be used as power supply with fixed voltage and current. In this case confirm the operation mode before using the module.

2－1. Overall structure of the module

Components of the BWS50-28S1R5 module are listed below.

Component	Model	Rated input voltage	Rated output	Remarks
PFC module	BWS50-28S1R5P	AC100/200V	DC 360V	PFC circuit
Power transmitting module	BWS50-28S1R5T	DC 360V	－	Contains inverter circuit and power transmitting transformer
Power receiving module	BWS50-28S1R5R	－	28.7V, 1.5A	Contains power receiving transformer, rectifier circuit and CCCV circuit

*Inverter circuit board and power transmitting transformer of the power transmitting module are adjusted together at the time of shipment. Always confirm that pairing indication numbers match before using the module.

The following parts are included as accessories

	Model	Length	Terminal treatment	Remarks
Harness 1 for BWS series	BWSH01	300mm	FN1.25-4 VHR-5N	For commercial power supply input
Harness 2 for BWS series	BWSH02	300mm	VHR-3N VHR-3N	For connection of PFC circuit to inverter circuit
Harness 3 for BWS series	BWSH03	300mm	XHP-2 XHP-2	For DC28.7V output

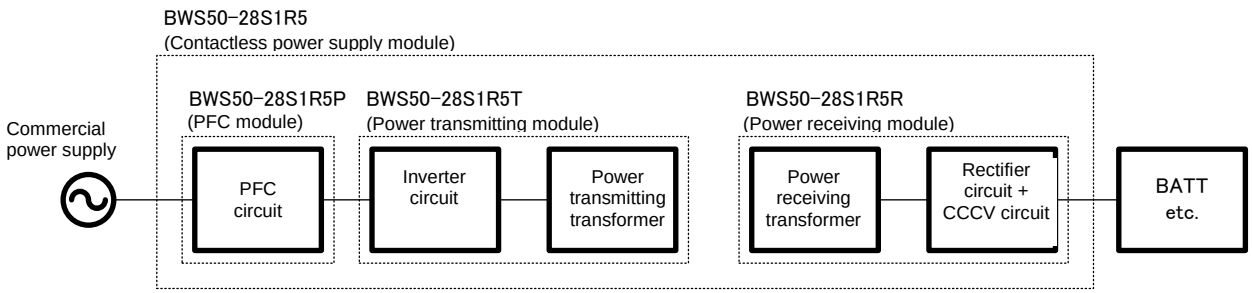

BWS50-28S1R5 overall block diagram

2-2. Components of the PFC module (BWS50-28S1R5P)

- PFC circuit : PFC circuit for BWS50-28S1R5
- Harness for commercial power supply input : BWSH01

Downloaded from Arrow.com.

2-3. Components of power transmitting module (BWS50-28S1R5T)

・Inverter circuit : Inverter circuit for BWS50-28S1R5
・Harness for connection to PFC circuit: BWSH02
・Power transmitting transformer : Power transmitting transformer for BWS50-28S1R5

2-4. Components of power receiving module (BWS50-28S1R5T)

・Rectifier circuit + CCCV circuit : Rectifier circuit + CCCV circuit for BWS50-28S1R5
・harness for DC (28.7V) output : BWSH03
・Power receiving transformer : Power receiving transformer for BWS50-28S1R5

2-5. Conversion method: AC/DC

2-6. Cooling method : Natural cooling

2-7. Environmental standard : RoHS compliant

3. Environmental conditions

3－1. Operating environment

3-1-1. Temperature range: [-20°C~+50°C] (the ambient temperature)
3-1-2. Humidity range: [20%R.H.~95%R.H.] (max wet bulb temperature 35°C without compensation)

3-2. Storage environment

3-2-1. Temperature range: [－30°C~+85°C] (the ambient temperature)
3-2-2. Humidity range: [20%R.H.~95%R.H.] (max wet bulb temperature 35°C without compensation)

4. Input specifications

(*Measured at room temperature and distance between transmitting and receiving transformers 0mm, unless otherwise specified.)

4–1.Input voltage: Rated input voltage [AC100/200V] (single phase)
Input voltage range [AC85V~AC264V] (single phase)
Input frequency [50/60Hz] (single phase)

4-2. Input current: For AC100V input voltage [PFC module 0.7A max.] (for rated load, gap 10mm)
[Power transmitting module 0.2A max.] (for rated load, gap 10mm)*1

*1 The input current of the power transmitting module when PFC module is connected

4-3. Efficiency: For AC 100V input voltage [PFC module 93%typ.] (for rated load)*2
[power transmitting and receiving modules 81%typ.] (for rated load) *3

*2 PFC output power÷PFC input power
*3 Receiving module output power ÷ transmitting module input power

4－4. Instantaneous input interruption: For AC100V input voltage [10ms max.] (for maximum load, no failures)

4-5. Power factor: For AC100V input [0.97 typ.] (for rated load)

Downloaded from Arrow.com.

5. Output specifications

5–1. Output specifications

(* Unless otherwise specified, measured at room temperature and distance between transmitting and receiving transformers 0mm, possible power supply distance 0mm ～ 10mm in the direction perpendicular to the power supply plane.)

Parameter	Specifications	Remarks
Rated output voltage	DC28.7V	-
Output voltage accuracy	DC27.26V～DC30.14	-
Rated output current	1.5A	-
Output current	0.9～1.5A	-
Output current accuracy	1.54A±10%	*Stability when operating at constant current
Ripple noise	200mV$_{P-P}$ typ. 400mV$_{P-P}$ max.	*See chapter 5-2
Input fluctuation	20mV max.	*See chapter 5-4
Load fluctuation	20mV max.	*See chapter 5-5
Output overvoltage protection	No	-
ON／OFF control	Yes	*See chapter 5-7

5-2. Ripple noise

A dummy load device (electronic load) is used when measuring the ripple noise.
Measured with 20MHz band oscilloscope, using measuring circuit shown below.

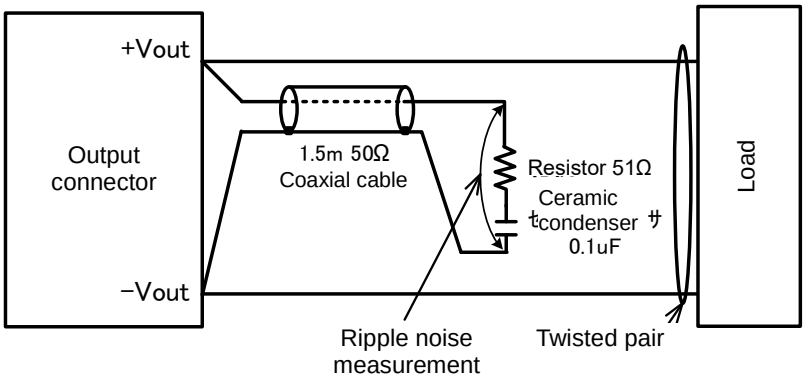

Downloaded from Arrow.com.

5-3. Output voltage accuracy

The output voltage accuracy includes temperature fluctuation, input voltage fluctuation given in chapter 5-4 and load fluctuation given in chapter 5-5.

The temperature fluctuation range is the temperature range given in chapter 3-1. Operating environment.

5-4. Input fluctuation

This fluctuation values is for input voltage in the range of AC85V~AC264V", at rated load.

5-5. Load fluctuation

This fluctuation value is for load current in the range of 75%~100%, at rated input voltage.

Because for light load (0% - about 55%) the intermittent operation mode is assumed, this condition is excluded from the definition range of the load fluctuation.

About intermittent operation mode see chapter 5-9-2.

5-6. Overcurrent protection in power transmitting module

AN excessive current flows in the power transmitting module when the power receiving transformer is located beyond the power feeding distance, when a metal object is caught between power transmitting and receiving transformers or when overload occurs. In this case the protection circuit in the inverter detects the excessive current and stops the output of the power transmitting module. For operation mode see chapter 5-9-3 Protection operation.

The output stop state is maintained for 10 minutes; output is restored automatically after this time has passed.

5-7. ON/OFF control

Using the ON/OFF control of this product, it is possible to turn inverter operation ON/OFF without connecting or disconnecting the input.

Connect the connector CN4 as shown below.

+12V(CN4-1 pin) and RC_IN_+(CN4-6 pin) : connect SW1.

GND(CN4-2 pin) and RC_IN_G(CN4-7 pin) : short these terminals.

Inverter operation can be controlled using SW1 switch.

・SW1 SHORT : Output ON

・SW1 OPEN : Output OFF

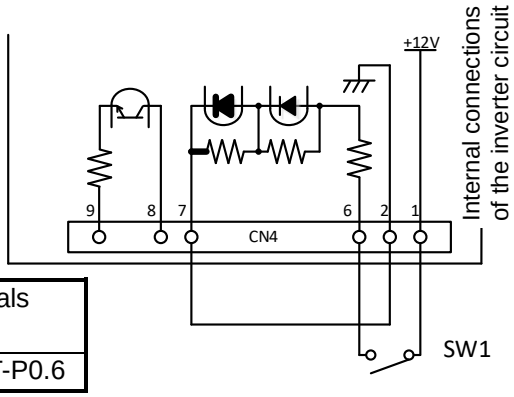

CN4	connector	Compatible housing	Terminals
	B10B-XH-A	XHP-10	SXH-001T-P0.6

Since the internal circuit of the ON / OFF control function is electrically isolated by photo coupler, it can also be used when external circuit must be electrically isolated from the module. Electrically isolated RC signal can be used as output synchronized with ON / OFF state.

Usage: RC_IN_+(CN4-6 pin) and RC_IN_G(CN4-7 pin)

・DC8V～DC26V voltage applied (inflow current 5ma max) : Output ON

・Open (no voltage applied) : Output OFF

RC signal output: RC_OUT_+(CN4-8 pin) and RC_OUT_G(CN4-9 pin)

・Applied voltage: 24V max.

Downloaded from Arrow.com.

・Inflow current:1mA min.　5mA max.

・A 0Ω resistor is connected internally to RC_OUT_G(CN4-9 pin).

5－8.　LED control circuit

A surface-mounted LED (part no.: LED1) used for status indication is installed in the inverter circuit. For indication pattern refer to chapter 5-9 Operation modes.

The CN4-3 pin of the inverter is synchronized with the surface-mounted LED installed on the same board, and can be used to control externally connected LED.

When using external LED, prepare separate isolated power source. Connect the negative terminal of the isolated power source to the pin CN4-2, connect the positive terminal of the power source to anode of the LED, and connect cathode of the LED to the CN4-3 pin.

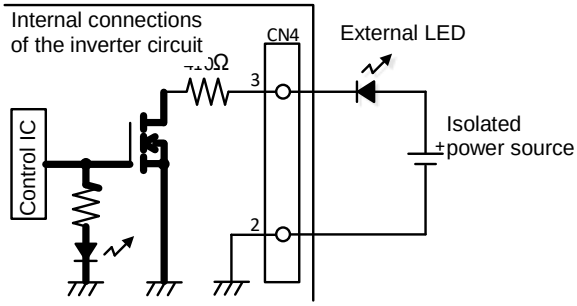

In this case the maximum current flowing through the CN4-3 pin will be 9mA. Maximum voltage that can be applied to the CN4-3 pin is 50V. When using external LED, make sure that these maximum allowable voltage and current are not exceeded.

5-9. Operation modes

Inverter operation is controlled by microcontroller installed in the inverter of the power transmitting module. There are three operation modes depending on the load conditions: continuous operation, intermittent operation and protection operation.

5-9-1. Continuous operation: used when output load of the product is 55% or higher of the rated load

In this operation mode the module operates continuously while lithium ion battery is being charged with constant current, and after switching to constant voltage charging until the charging current lowers to the levels given below. Although affected by gap and displacement of transmitting and receiving transformers, and environment surrounding the mounting position, the following standard thresholds are used for switching to the intermittent operation mode.

・Minimal gap and displacement：　about 55% of the rated load.

・Maximal gap and displacement：　about 25% of the rated load

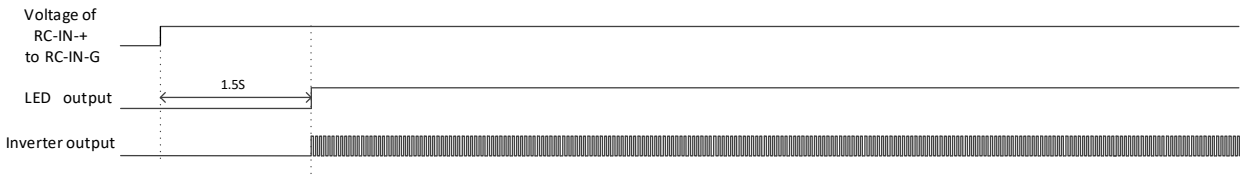

5-9-2.　Intermittent operation: used when output load of the product lowers

This operation mode is used when it is assumed that lithium ion battery is being charged at constant voltage and the charging current has decreased. Although affected by gap and displacement of transmitting and receiving transformers, and environment surrounding the mounting position, the following standard thresholds are used for switching to the intermittent operation mode.

・Minimal gap and displacement: 55% or less of the rated load.

・Maximal gap and displacement: 25% or less of the rated load.

*After repeating the intermittent operation for 1 minute, output stops for 10 minutes. Operation is restarted 10 minutes after stopping. The operation can also be restarting by switching the ON/OFF control again.

Downloaded from Arrow.com.

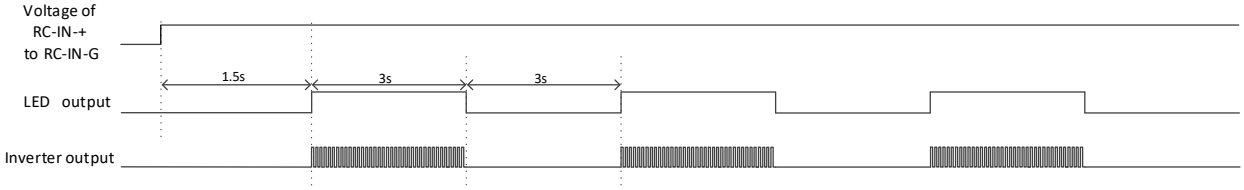

5-9-3. Protection operation: used when the power transmitting mode detects overcurrent (see chapter 5-6)

*Operation is restarted 10 minutes after output is stopped. The operation can also be restarting by switching the ON/OFF control again.

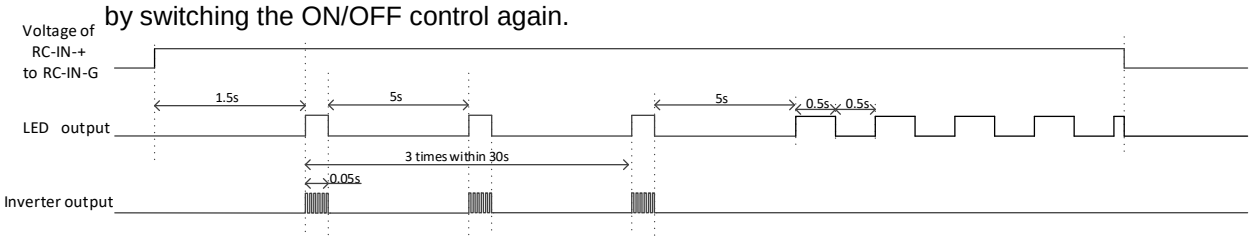

Downloaded from Arrow.com.

5-10. Allowable power supply range

The figure below shows the ranges in which operation at the rated load is possible for given gap and displacement, when transmitting and receiving transformers are facing each other. X axis shows the direction along short size of transmitting and receiving transformers, and Y axis shows the direction along long side of the transformers.

※The actual allowable power supply range is influenced by environment surrounding the mounting position, and can be bigger or smaller.

The allowable range below is given for room temperature and under the condition that no metal objects are placed around the transformer.

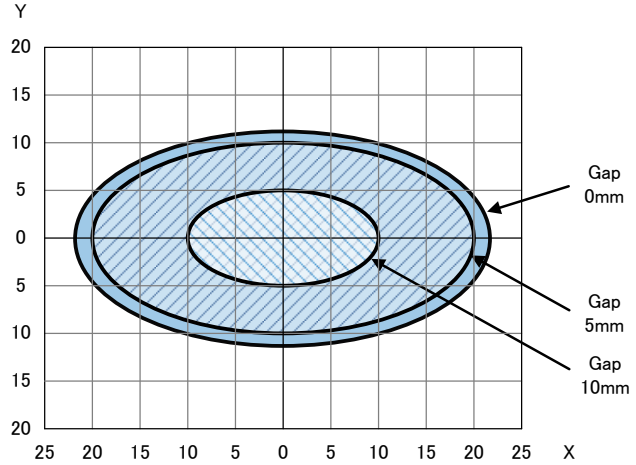

6. Insulation resistance and withstand voltage

6–1. Insulation resistance:

・PFC module

Between all inputs and outputs and FG (housing) 50MΩ or higher using DC500V megger

・Power transmitting module

Between all inputs and outputs and aluminum case of transmitting transformer 50MΩ or higher using DC500V megger

・Power receiving module

Between all inputs and outputs and rear aluminum plate 50MΩ or higher using DC500V megger

6-2. Withstand voltage:

・PFC module

Between all inputs and outputs and FG (housing) AC1500V during 1 minute, no failures

・Power transmitting module

Between all inputs and outputs and aluminum case of transmitting transformer AC1500V during 1 minute, no failures

・Power receiving module

Between all inputs and outputs and rear aluminum plate AC500V during 1 minute, no failures

※ To obtain this value for the PFC module, six spacers of 7 mm or more length were mounted on the housing.

Downloaded from Arrow.com.

7. Structure, appearance and pin assignment

7－1. PFC module (BWS50-28S1R5P)

7－1－1. Appearance and dimensions of the PFC circuit board

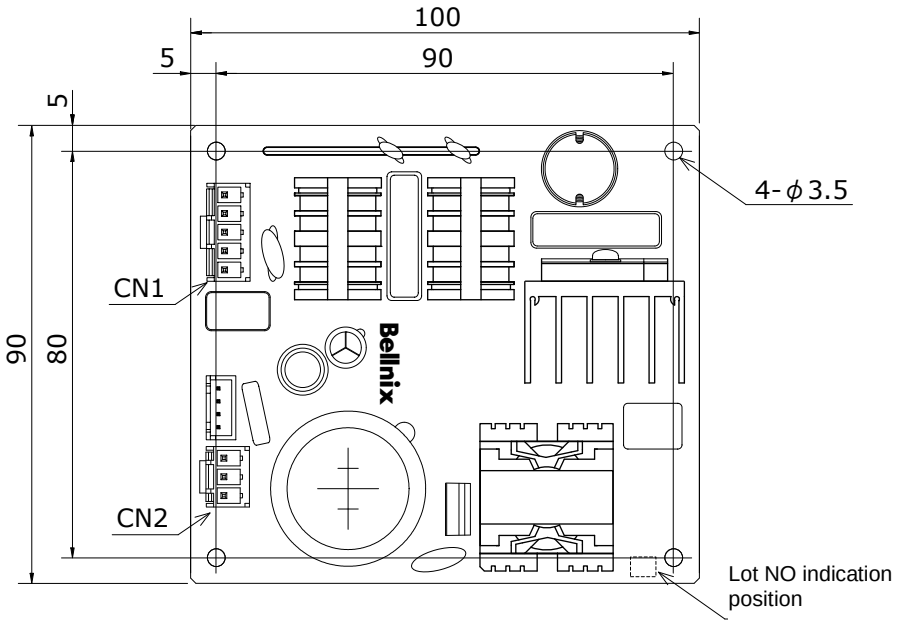

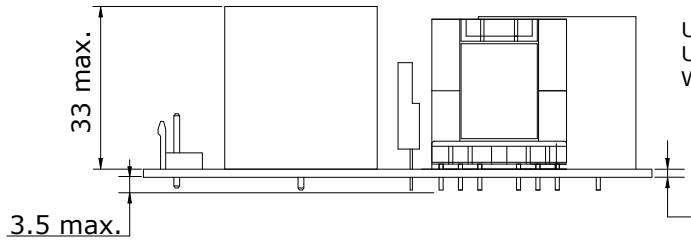

Units: mm
Unspecified dimensional tolerances: ±0.5mm
Weight (typ.): 200g

7－1－2. Pin assignment of the PFC circuit board

CN No.	Terminal name	Terminal type	Terminal No.	Indication	Electrical function
CN1	L	Connector: <B3P5-VH : JST>	1	1	Input AC100V/200V
	N		3	-	Input AC100V/200V
	FG		5	5	Frame ground
CN2	+Vout	Connector: <B3P-VH : JST>	1	1	Output DC360V
	-		2	-	
	-Vout		3	3	PGND

* Connect harness BWSH01 to CN1, and harness BWSH02 to CN2.

Downloaded from Arrow.com.

7－2. Power transmitting module (BWS50-28S1R5T)

7－2－1. Appearance and dimensions of the inverter circuit board

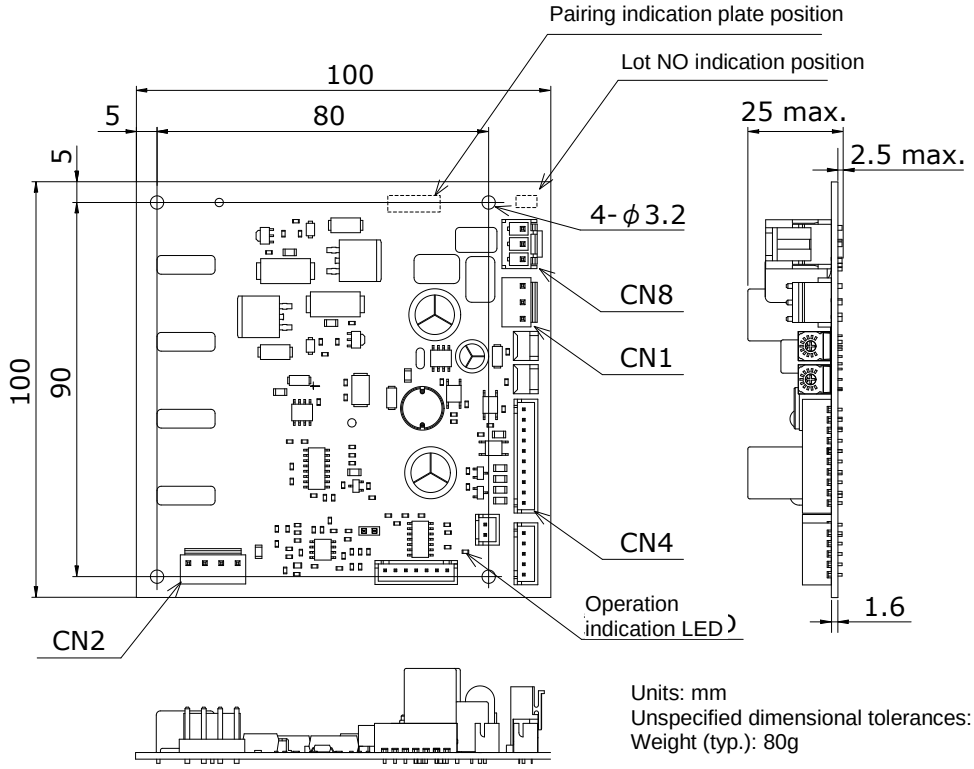

Units: mm
Unspecified dimensional tolerances: ±0.5mm
Weight (typ.): 80g

7－2－2. Appearance and dimensions of the power transmitting transformer

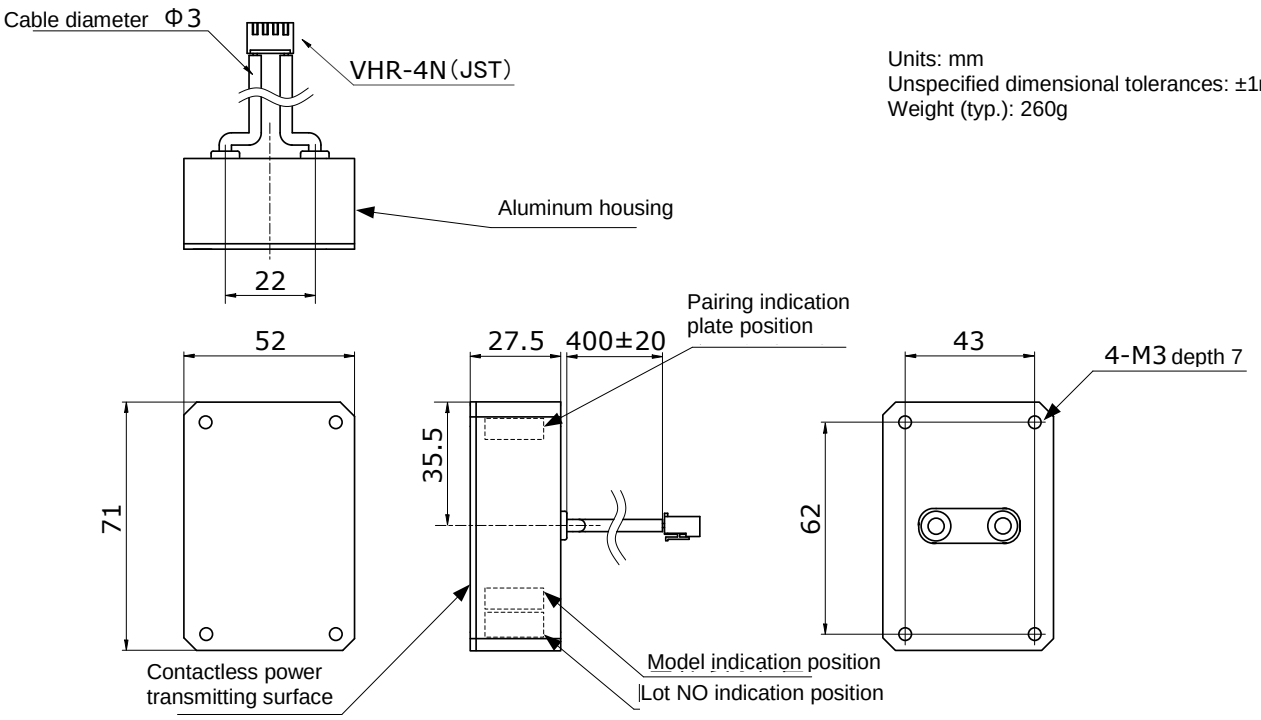

Units: mm
Unspecified dimensional tolerances: ±1mm
Weight (typ.): 260g

Downloaded from Arrow.com.

7－2－3. Pin assignment of the inverter circuit board

CN No.	Terminal name	Terminal type	Terminal No.	Indication	Electrical function
CN1	Vin	Connector: <B3P-VH:JST>	1	1	Input DC360V
	-		2	-	
	GND		3	3	GND
CN2	Vout 1	Connector: <B4P-VH:JST>	1	1	Output AC180V (connected to power transmitting transformer)
	-		2	-	
	-		3	-	
	Vout 2		4	4	Output AC180V (connected to power transmitting transformer)
CN4	+12V	Connector: <B10B-XH-A:JST>	1	1	Power supply output terminal for inverter ON/OFF control
	GND		2	-	GND
	LED1		3	-	External LED connection terminal
	-		4	-	Not used
	-		5	-	Not used
	RC-IN- +		6	-	Inverter ON/OFF control terminal +
	RC-IN-G		7	-	Inverter ON/OFF control terminal -
	RC-OUT- +		8	-	RC signal output terminal +
	RC-OUT-G		9	-	RC signal output terminal -
	-		10	10	Not used
CN8	Vin	Connector: <B3P-VH:JST>	1	1	Input DC360V
	-		2	-	
	GND		3	3	GND

* Connect harness BWSH02 to CN1, and power transmitting transformer to CN2.

* Contact preventing housing (VHR-3N) is connected to CN8 .

Downloaded from Arrow.com.

7－3.　Power receiving module (BWS50-28S1R5R)

7－3－1.　Rectifier + CCCV circuit board

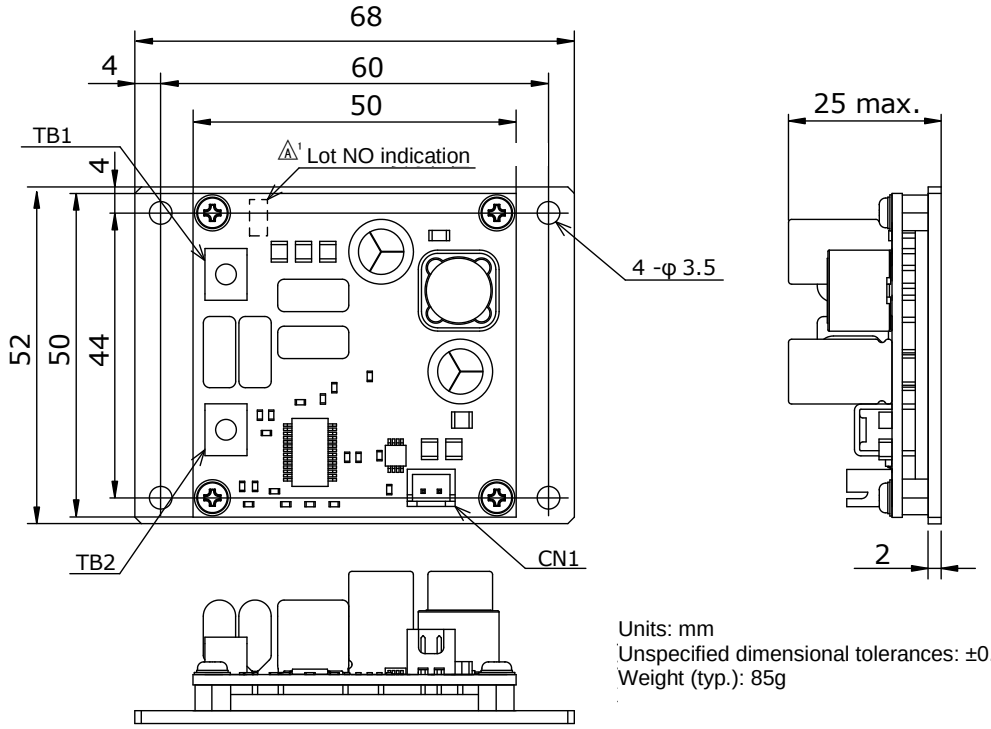

Units: mm
Unspecified dimensional tolerances: ±0.5mm
Weight (typ.): 85g

7－3－2.　Appearance and dimensions of the power receiving transformer

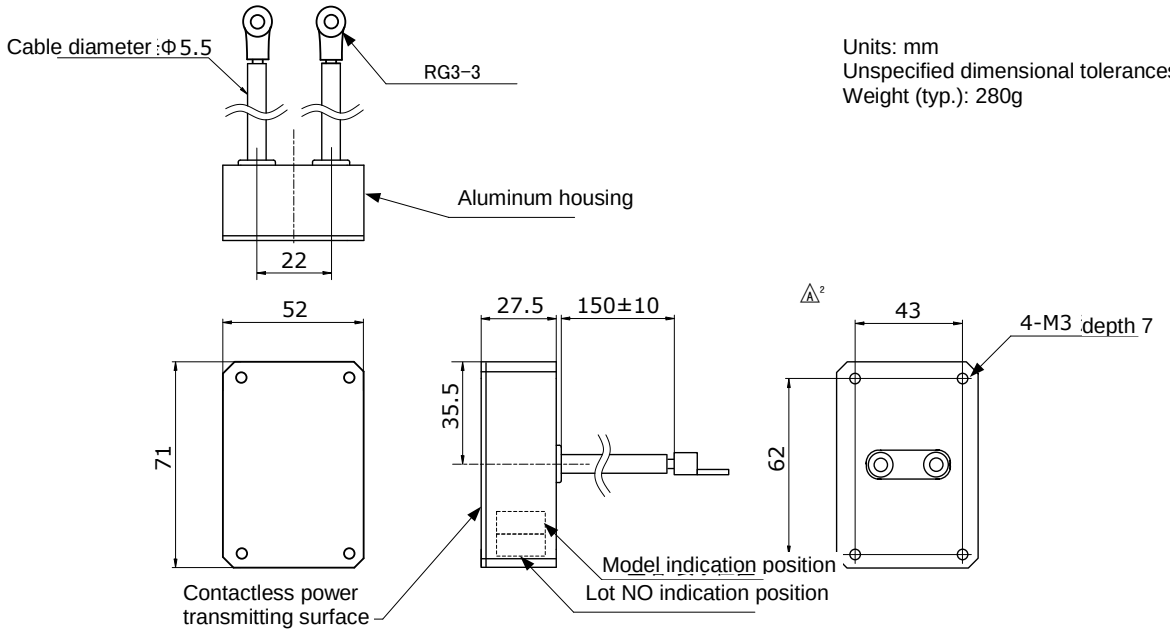

Units: mm
Unspecified dimensional tolerances: ±1mm
Weight (typ.): 280g

Downloaded from Arrow.com.

7－3－3. Pin assignment of the rectifier + CCCV circuit board

CN No.	Terminal name	Terminal type	Terminal No.	Indication	Electrical function
TB1	Vin1	Board terminal：<OT-052:OSADA>	-	TB1	Connected to power receiving transformer
TB2	Vin2		-	TB2	Connected to power receiving transformer
CN1	Vout	Connector: <B2B-XH-A:JST>	1	1	Output DC28.7V
	GND		2	2	GND

※ Fix the power receiving transformer to TB1 and TB2 connectors of the rectifier + CCCV circuit board using M3 5mm screws.

7-4. Appearance

Scratches that do not affect functionality and characteristics of the product can be ignored. However, scratches whose exceeds 2/3 of the aluminum plate thickness, or those altering the appearance of the product, are not allowable.

8. Lot No. indication

Lot No. indication pattern is shown below.

15 1 (Manufactured January 2015)
15 D 2 (Manufactured December 2015)

- 2: Manufacture control code (may be absent)
- D: Month of manufacture (Jan-Sep=1-9, Oct=0, Nov=N, Dec = D
- 15: Year of manufacture (2 lower digits)

9. Vibration and shock testing

Vibration: 5 ~ 10Hz total amplitude 10mm, 10 ~ 55Hz, acceleration 2G (1 hour in each of 3 directions)

Shock: Acceleration 20G (3 times in each of 3 directions)
Shock time: 11±5ms

10. Standard connection circuit

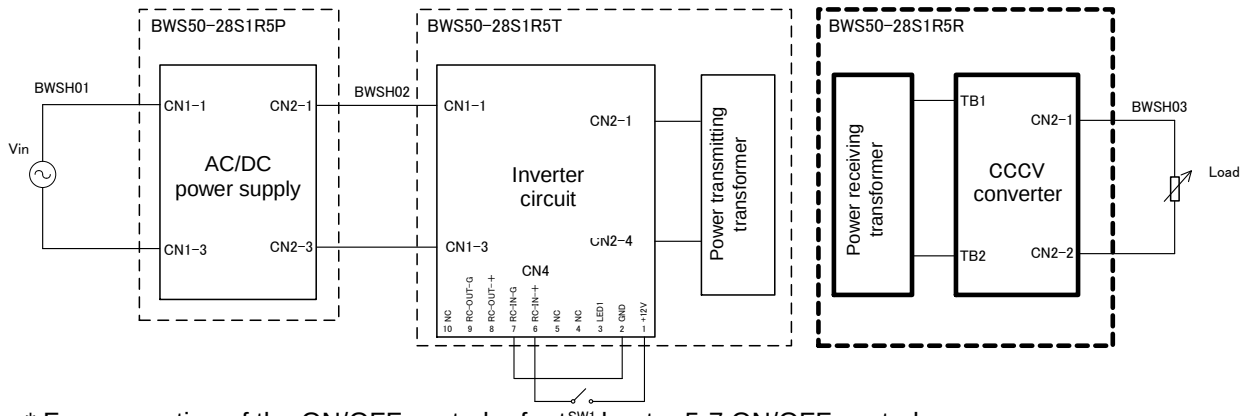

* For connection of the ON/OFF control refer to chapter 5-7 ON/OFF control.

Downloaded from Arrow.com.

11. How swapping

Hot swapping of both input and output is not allowed.

12. Precautions

To ensure user's safety, check product specifications before using the product and always observe the following precautions when using it.

- When using the product, do not allow metal and other foreign objects to get caught between power transmitting and receiving transformer. It may cause heating or loss of efficiency.
- When installing the product, place it so that fixing metal parts and electronic components do not protrude in the direction of the power feeding surface (black resin plate) of the power transmitting and receiving transformers.
- During power transmission the magnetic flux density in the range of up to 60 mm from power transmitting and receiving transformers is 27μT or more. When installing the product, ensure that heads, pacemakers and precision equipment can not be brought close to this range.
- The product contains circuits operating at high voltage. Touching boards during power transmission may cause electric shock.
- Even if the power transmitting transformer is within the power feeding range, increasing gap or displacement will cause heating of the aluminum housing. When installing the product, consider the heat resistant temperature of the housing. *Reference temperature rise value 50°C (for Gap12mm)
- The aluminum plate of the power receiving module (BWS 50 - 28S1R5R) may become hot. When installing the product, consider the heat resistant temperature of the housing. *Reference temperature rise value 30°C
- When using this product to charge batteries, confirming that the charging specification of batteries is compatible with the specification of this product before using it.
- The product is intended for use in general electronics equipment (office equipment, communication equipment, measurement equipment). Do not use the product in medical equipment, nuclear equipment, trains, and other areas, where human life or property may be directly affected by damaged product. For any use other than in general electronics equipment please consult the manufacturer.
- The product is not suitable for parallel operation.
- Minor changes and component changes that do not significantly affect specifications can be made due to improvement of product characteristics and other reasons without prior notice.
- The product may be damaged if used under nonstandard electrical or environmental conditions including temperature, etc. The product must be always used within specifications.
- Avoid storing or using the product in places where corrosive gas or dust are generated.
- The product may be damaged by static electricity. Take measures against static electricity in the working environment, such as using grounding straps to discharge the static charge on workers, etc.
- The product does not contain build-in overvoltage protection.
- The product does not come with a test report.

13. Warranty

The warranty period of this product is one year. Should the product become defective within the warranty period due defects in design or manufacture, it will be repaired or replaced free of charge. However, this warranty does not cover products which have been subjected to internal modifications, etc.

The scope of the warranty is limited to this product only.

Downloaded from Arrow.com.