Data Sheet | Item Number: 2022-104/000-006

1-conductor female connector; Push-in CAGE CLAMP®; 4 mm²; Pin spacing 5.2 mm; 4-pole; 4,00 mm²; blue

https://www.wago.com/2022-104/000-006



Color: blue

Similar to illustration

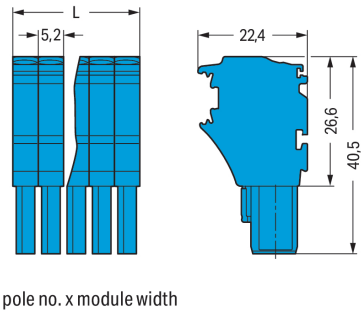

L = pole no. x module width

Dimensions in mm

Female connector, 2022 Series, blue

This female connector (item number 2022-104/000-006) provides hassle-free electrical installations. Ensure that the strip lengths are between 10 and 12 mm when connecting conductors to this female connector. Pluggable rail-mount terminal blocks are primarily found in switchgear units and control systems, most notably in railroad technology. These innovative systems combine the benefits of rail-mount terminal blocks and connectors for a flexible and reliable wiring system. You also have the option of pre-assembling installations, which not only makes production but also installation, operation, and maintenance more efficient and cost-effective. This product features conductor terminals and utilizes Push-in CAGE CLAMP®. Push-in CAGE CLAMP® connection technology is ideal for connecting all conductor types. It allows direct insertion of both solid and fine-stranded conductors with ferrules without the need for tools—all thanks to its pluggable design. Dimensions: (20.8 x 40.5 x 22.4) mm (width x height x depth). Depending on the type of conductor, this female connector is designed for conductor cross sections ranging from 0.25 mm² to 4 mm².

Reliable connection of up to 4 potentials

An operating tool is used to operate this female connector/socket.

- Ready to install, immediately usable
- Compact sizes
- Actuation via operating tool
- 4 connection points

Notes

Safety Information	According to EN 61984, pluggable connectors without current interrupting capacity must not be mated or unmated when live or under load.

Electrical data

Ratings per	IEC/EN 61984		
Overvoltage category	III	III	II
Pollution degree	3	2	2
Nominal voltage	690 V	-	-
Rated impulse withstand voltage	6 kV	-	-
Rated current	24 A	-	-
Current at conductor cross-section (max.) mm²	32 A	-	-

Approvals per	UL 1059		
Use group	B	C	D
Rated voltage	600 V	600 V	-
Rated current	20 A	20 A	-

Downloaded from Arrow.com.

Approvals per	CSA 22.2 No 158		
Use group	B	C	D
Rated voltage	-	600 V	-
Rated current	-	20 A	-

General information	
Wiring direction	Front-entry wiring

Connection Data

Clamping units	4
Total number of potentials	4

Connection 1

Connection technology	Push-in CAGE CLAMP®
Actuation type	Operating tool
Connectable conductor materials	Copper
Nominal cross-section	2.5 mm²
Solid conductor	0.25 … 4 mm² / 22 … 12 AWG
Solid conductor; push-in termination	0.75 … 4 mm² / 18 … 12 AWG
Fine-stranded conductor	0.25 … 4 mm² / 22 … 12 AWG
Fine-stranded conductor; with insulated ferrule	0.25 … 2.5 mm² / 22 … 14 AWG
Fine-stranded conductor; with ferrule; push-in termination	1 … 2.5 mm² / 18 … 14 AWG
Note (conductor cross-section)	Depending on the conductor characteristic, a conductor with a smaller cross-section can also be inserted via push-in termination.
Strip length	10 … 12 mm / 0.39 … 0.47 inches
Pole number	4
Wiring direction	Front-entry wiring

Physical data

Width	20.8 mm / 0.819 inches
Height	40.5 mm / 1.594 inches
Depth	22.4 mm / 0.882 inches
Module width	5.2 mm / 0.205 inches

Mechanical data

Variable coding	Yes
Marking level	Side marking
Anti-rotation protection	Yes

Plug-in connection

Contact type (pluggable connector)	Female connector/socket
Connector (connection type)	for conductor
Mismating protection	No
Plugging without loss of pin spacing	Yes

Continued on next page
Downloaded from Arrow.com.

Material data

Note (material data)	Information on material specifications can be found here
Color	blue
Material group	I
Insulation material (main housing)	Polyamide (PA66)
Flammability class per UL94	V0
Fire load	0.229 MJ
Weight	14 g

Environmental requirements

Processing temperature	-35 … +85 °C
Continuous operating temperature	-60 … +105 °C

Environmental Testing

Test specification: Railway applications – Rolling stock – Electronic equipment	DIN EN 50155 (VDE 0115-200):2022-06
Test procedure: Railway applications – Rolling stock equipment – Vibration and shock tests	DIN EN 61373 (VDE 0115-0106):2011-04
Spectrum/Mounting location	Service life test, Category 1, Class A/B
Functional test with noise-like oscillations	Test passed according to Section 8 of the standard
Frequency	f_1 = 5 Hz to f_2 = 150 Hz
Acceleration	0.101g (highest test level used for all axes)
Test duration per axis	10 min.
Test directions	X, Y and Z axes
Monitoring of contact faults and interruptions	Passed
Voltage drop measurement before and after each axis	Passed
Simulated service life test through increased levels of noise-like oscillations	Test passed according to Section 9 of the standard
Frequency	f_1 = 5 Hz to f_2 = 150 Hz
Acceleration	0.572g (highest test level used for all axes)
Test duration per axis	5 h
Test directions	X, Y and Z axes
Extended testing: Monitoring of contact faults and interruptions	Passed
Extended testing: Voltage drop measurement before and after each axis	Passed
Shock test	Test passed according to Section 10 of the standard
Shock pulse form	Half sine
Acceleration	5g (highest test level used for all axes)
Shock duration	30 ms
Number of shocks (per axis)	3 pos. und 3 neg.
Test directions	X, Y and Z axes
Extended testing: Monitoring of contact faults and interruptions	Passed
Extended testing: Voltage drop measurement before and after each axis	Passed
Vibration and shock stress for rolling stock equipment	Passed

Downloaded from Arrow.com.

Commercial data

Product Group	18 (X-COM-System)
PU (SPU)	100 pcs
Packaging type	Box
Country of origin	DE
GTIN	4066966670097
Customs tariff number	85366990990

Product Classification

UNSPSC	39121409
eCl@ss 10.0	27-14-11-06
eCl@ss 9.0	27-14-11-06
ETIM 9.0	EC001284
ETIM 10.0	EC001284
ECCN	NO US CLASSIFICATION

Environmental Product Compliance

RoHS Compliance Status	Compliant,No Exemption

Approvals / Certificates

General approvals

Approval	Standard	Certificate Name
CSA CSA Group	C22.2 No. 158	2437422

Declarations of conformity and manufacturer's declarations

Approval	Standard	Certificate Name
Railway WAGO GmbH & Co. KG	-	Z00004391.000

Downloads

Environmental Product Compliance

Compliance Search

Environmental Product Compliance 2022-104/000-006

Documentation

Bid Text

2022-104/000-006	14.05.2019	docx 15.33 KB
2022-104/000-006	15.05.2019	xml 4.12 KB

Downloaded from Arrow.com.

CAD/CAE-Data

CAD data	CAE data
2D/3D Models 2022-104/000-006	EPLAN Data Portal 2022-104/000-006
	WSCAD Universe 2022-104/000-006
	ZUKEN Portal 2022-104/000-006

1 Compatible Products

1.1 Optional Accessories

1.1.1 Ferrule

1.1.1.1 Ferrule

Item No.: 216-241
Ferrule; Sleeve for 0.5 mm² / 20 AWG; insulated; electro-tin plated; electrolytic copper; gastight crimped; acc. to DIN 46228, Part 4/09.90; white

Item No.: 216-242
Ferrule; Sleeve for 0.75 mm² / 18 AWG; insulated; electro-tin plated; electrolytic copper; gastight crimped; acc. to DIN 46228, Part 4/09.90; gray

Item No.: 216-262
Ferrule; Sleeve for 0.75 mm² / 18 AWG; insulated; electro-tin plated; electrolytic copper; gastight crimped; acc. to DIN 46228, Part 4/09.90; gray

Item No.: 216-243
Ferrule; Sleeve for 1 mm² / AWG 18; insulated; electro-tin plated; electrolytic copper; gastight crimped; acc. to DIN 46228, Part 4/09.90; red

Item No.: 216-263
Ferrule; Sleeve for 1 mm² / AWG 18; insulated; electro-tin plated; electrolytic copper; gastight crimped; acc. to DIN 46228, Part 4/09.90; red



Item No.: 216-244
Ferrule; Sleeve for 1.5 mm² / AWG 16; insulated; electro-tin plated; electrolytic copper; gastight crimped; acc. to DIN 46228, Part 4/09.90; black



Item No.: 216-264
Ferrule; Sleeve for 1.5 mm² / AWG 16; insulated; electro-tin plated; electrolytic copper; gastight crimped; acc. to DIN 46228, Part 4/09.90; black



Item No.: 216-246
Ferrule; Sleeve for 2.5 mm² / AWG 14; insulated; electro-tin plated; electrolytic copper; gastight crimped; acc. to DIN 46228, Part 4/09.90; blue



Item No.: 216-266
Ferrule; Sleeve for 2.5 mm² / AWG 14; insulated; electro-tin plated; electrolytic copper; gastight crimped; acc. to DIN 46228, Part 4/09.90; blue

1.1.2 Insulation stop

1.1.2.1 Insulation stop



Item No.: 2002-171
Insulation stop; 0.25 - 0.5 mm²; 5 pieces/strip; light gray



Item No.: 2002-172
Insulation stop; 0.75 - 1 mm²; 5 pieces/strip; dark gray

Downloaded from Arrow.com.

1.1.3 Locking system

1.1.3.1 Locking system



Item No.: 2022-151
Locking lever; gray



Item No.: 2022-152
Locking lever; orange

1.1.4 Marking

1.1.4.1 Label



Item No.: 210-805
Labels; for Smart Printer; permanent adhesive; 6 x 15 mm; 3000 pieces on roll; white



Item No.: 210-805/000-002
Labels; for Smart Printer; permanent adhesive; 6 x 15 mm; 3000 pieces on roll; yellow

1.1.4.2 Marker

Item No.: 793-5501
WMB marking card; as card; for terminal block width 5 - 17.5 mm; stretchable 5 - 5.2 mm; plain; snap-on type; white



Item No.: 2009-115
WMB-Inline; for Smart Printer; 1500 pieces on roll; stretchable 5 - 5.2 mm; plain; snap-on type; white

1.1.4.3 Marking strip



Item No.: 210-831
Marking strips; 25 m on roll; 2.3 mm wide; plain; Self-adhesive; white



Item No.: 210-832
Marking strips; 25 m on roll; 3 mm wide; plain; Self-adhesive; white



Item No.: 210-834
Marking strips; 25 m on roll; 5 mm wide; plain; Self-adhesive; white



Item No.: 210-833
Marking strips; 25 m on roll; 6 mm wide; plain; Self-adhesive; white



Item No.: 2009-110
Marking strips; for Smart Printer; 50 m on roll; not stretchable; plain; snap-on type; white

1.1.5 Protective warning marker

1.1.5.1 Cover



Item No.: 2002-115
Protective warning marker; for 5 terminal blocks; with high-voltage symbol, black; yellow

Downloaded from Arrow.com.

1.1.6 Strain relief

1.1.6.1 Strain relief plate

Item No.: 734-328
Strain relief plate; for female and male connectors; 12.5 mm wide; 1 part; gray

1.1.7 Tool

1.1.7.1 Operating tool



Item No.: 210-720
Operating tool; Blade: 3.5 x 0.5 mm; with a partially insulated shaft; multicoloured

Installation Notes

Coding

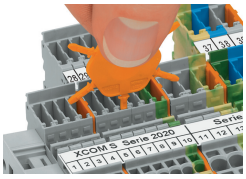

Insert coding pin into the corresponding slot and twist it off.



Coding a female plug: remove coding finger using a suitable tool.

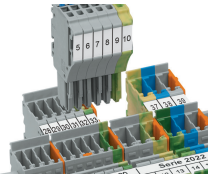

Insert coded female plug into X-COM®S-SYSTEM terminal block assembly.

Locking system

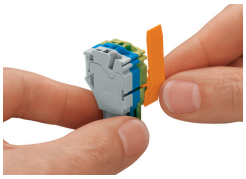

Slide the locking lever into position.

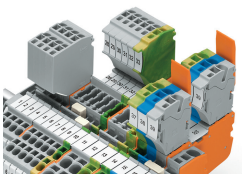

Female plugs can be individually locked.

Downloaded from Arrow.com.