THIS DRAWING IS UNPUBLISHED. RELEASED FOR PUBLICATION
© COPYRIGHT BY TYCO ELECTRONICS CORPORATION ALL RIGHTS RESERVED.

LOC	DIST	REVISIONS				
DF	00	P	LTR	DESCRIPTION	DATE	DWN	APVD
			0	CONVERTED RADIAL DWG TO TYCO ACAD DWG	06/04	—	—
			1	REVISED	06APR10	RF	JM

1. SHELL: ALUMINUM ALLOY 6061 T651
   INSERT RETENTION CLIP & GROUNDING SPRING: COPPER ALLOY PER ASTM B194
   PROTECTIVE COVER: THERMOPLASTIC ELASTOMER
2. SHELL: ELECTROLESS NICKEL PER SAE AMS-C-26074, CLASS 1.
   GROUNDING SPRING: ELECTROLYTIC NICKEL PER SAE AMS-QQ-N-290.
3. DATE CODE – YEAR & WEEK (YY WW)
4. INDEXING POINT FOR POLARIZATION
5. SHELL CAVITY FOR GPRB SERIES INSERTS WITH KEYING CODE A.
6. SHELL CAVITY FOR GPRB SERIES INSERTS WITH KEYING CODE B.
7. PROTECTIVE COVERS NOT SHOWN FOR CLARITY.
8. SCREW HEAD DIAMETER: 6.00 [.236] MAX.
9. PITCH FOR SIDE-BY-SIDE MOUNTING: 19.50 [.768] MIN.
10. DESCRIPTIVE PART NUMBER: GPRB2HD3N
    SERIES: GPRB
    SHELL SIZE: 2 (TWO-CAVITY SHELL)
    SHELL STYLE: H (RECEPTACLE WITH GROUNDING SPRINGS)
    MODIFICATION CODE: D (2x ø3.10mm THRU HOLES FOR PANEL MOUNTING)
    POLARIZATION CODE: 3 (LOCKING & POLARIZING HARDWARE PURCHASED SEPARATELY)
    SHELL PLATING: N (NICKEL PLATING)
11. THIS PRODUCT IS SOLD BY TYCO ELECTRONICS UNDER A LICENSE FROM RADIALL SA.

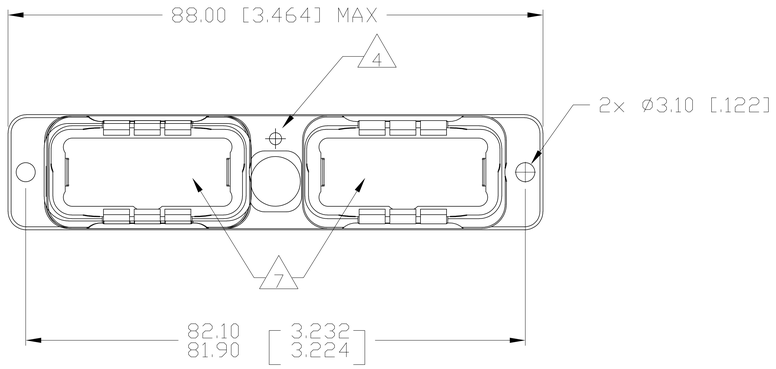

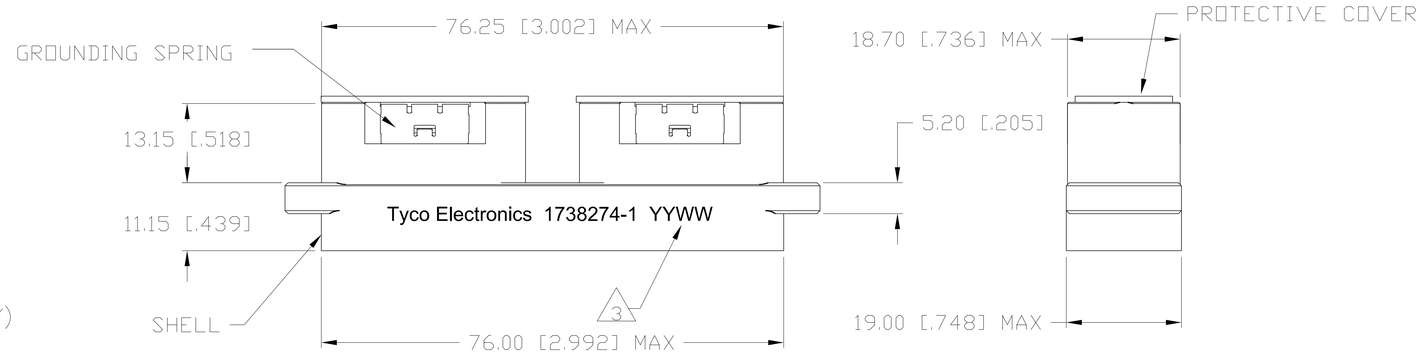

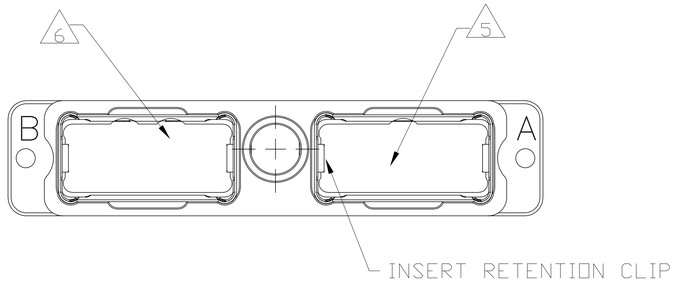

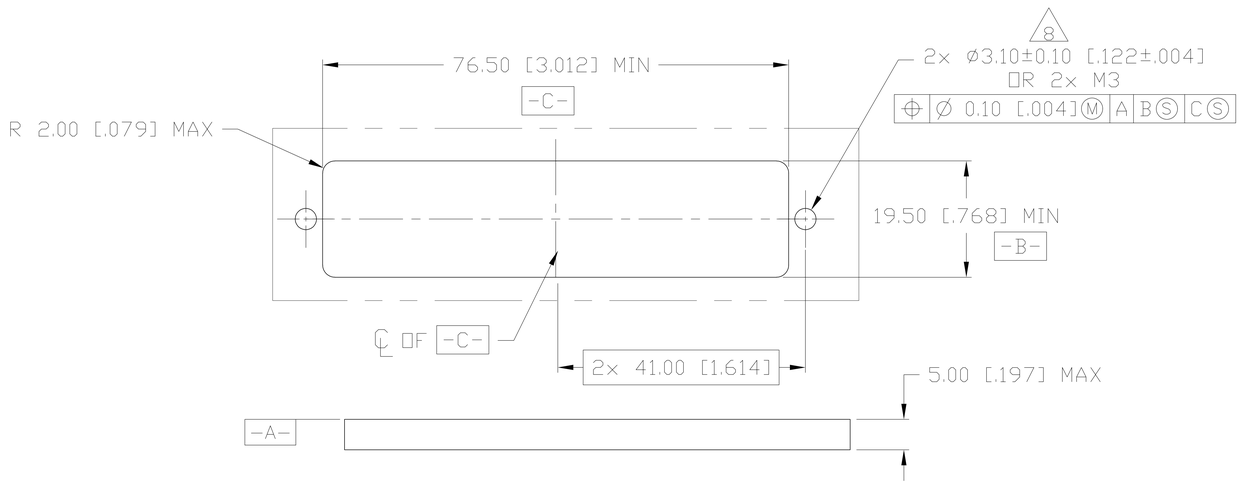

RECOMMENDED PANEL CUTOUT

THIS PRINT IS
PRELIMINARY
UNQUALIFIED PRODUCT
CONTACT PRODUCT ENGINEERING
BEFORE USING THIS PRINT

1738274-1
PART NUMBER

THIS DRAWING IS A CONTROLLED DOCUMENT.

DIMENSIONS: mm [INCHES]
TOLERANCES UNLESS OTHERWISE SPECIFIED:
0 PLC ± –
1 PLC ± –
2 PLC ± 0.20 [.008]
3 PLC ± –
4 PLC ± –
ANGLES ± –
MATERIAL 1
FINISH 2

DWN R FLAIG JUL04
CHK J MOSIER APR04
APVD J MOSIER APR04
PRODUCT SPEC —
APPLICATION SPEC —
WEIGHT —
CUSTOMER DRAWING

Tyco Electronics
Tyco Electronics Corporation
Harrisburg, Pa 17105-3608
PRELIMINARY
RECEPTACLE SHELL ASSEMBLY, WITH TWO 3.10mm DIA MOUNTING HOLES, GPRB2

SIZE	CAGE CODE	DRAWING NO	RESTRICTED TO
A0	00779	C-1738274	—

SCALE 1:1 SHEET 1 OF 1 REV 1

Downloaded from Arrow.com.