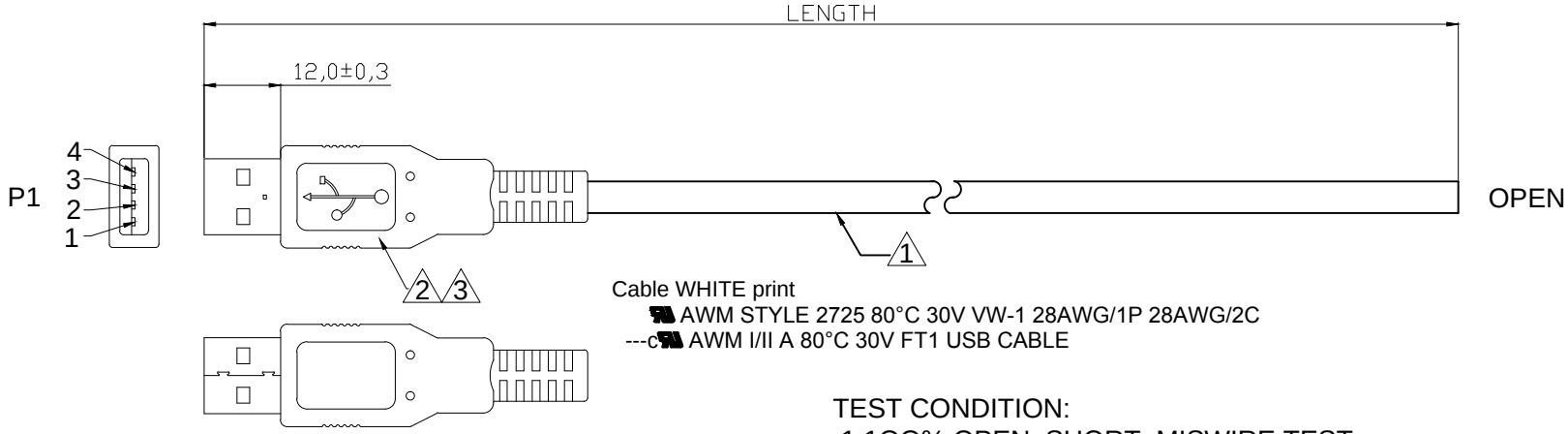

Cable WHITE print
AWM STYLE 2725 80°C 30V VW-1 28AWG/1P 28AWG/2C
---c AWM I/II A 80°C 30V FT1 USB CABLE

TEST CONDITION:
1.1OO% OPEN, SHORT, MISWIRE TEST
2.CONDUCT RESISTANCE : 2Ω Max
3.INSULATION RESISTANCE: 5MΩ Min
4.Dielectric test:300V DC

PE Bag Packing

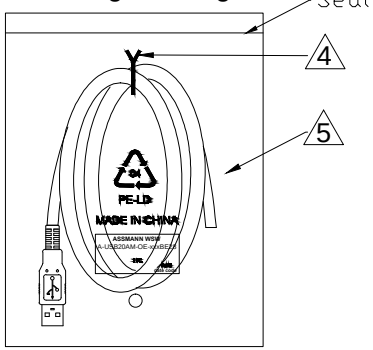

1PC/PE Bag

PIN ASSIGNMENT

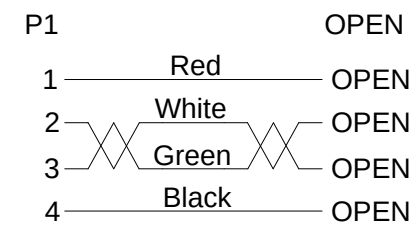

WSW P/N	Length(mm)	PE BAG SIZE
A-USB20AM-OE-050BE28	500±30	100*200*0.05mm
A-USB20AM-OE-100BE28	1000±30	100*200*0.05mm
A-USB20AM-OE-200BE28	2000±50	130*230*0.05mm
A-USB20AM-OE-300BE28	3000±50	130*230*0.05mm
A-USB20AM-OE-500BE28	5000±50	150*280*0.05mm

NO.	NAME.	Q'TY	SPECIFICATION
5	PE Bag	1	CLEAR PRINT BLACK"MADE IN CHINA"+"1PC."
4	TIE	1	white L=120mm
3	Over Molding	NA	PVC 45P Beige(BG002)
2	CONN	1	USB A MALE SHELL: Nickel PIN:G/F Insulator color:White
1	Cable	1	USB2.0 UL2725 28#/1P+28#/2C+AEB OD:3.8mm,PVC Jacket Beige(BG002)

RoHS compliant
Unit: mm

Scale	Free
TOLERANCE	
DIM	TOL
Angle	TOL

Id.	Modification	Date	Name
0	Drawn	09.10.2018	Xavier

	Date	Name
Drawn	09.10.2018	Xavier
Approved	09.10.2018	Winnie

ASSMANN WSW components

Customer-No.

ASSMANN WSW-No.
A-USB20AM-OE-xxxBE28

Drawing-No.
ASS 8364 CA

rev00

Replace

Sheet
1/2

CAB0903

Downloaded from Arrow.com.

Cable Wrapping Spec.

Cable Length(L)	Wrapping Dimension
L≤1M	W:80*L:100mm(MAX)
1M＜L≤2M	W:85*L:105mm(MAX)
2M＜L≤3M	W:120*L:150mm(MAX)
3M＜L≤5M	W:150*L:180mm(MAX)

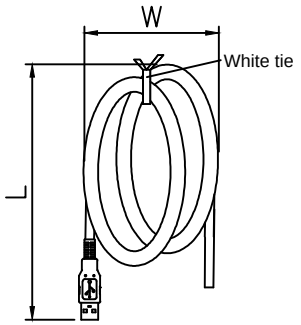

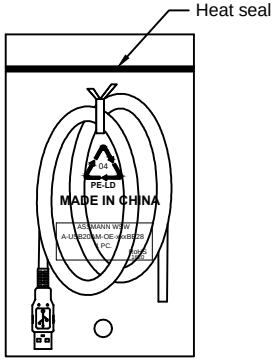

Content of the label
on small PE bag:

ASSMANN WSW
A-USB20AM-OE-xxxBE28
1 PC.
RoHS 1620

Consistent
ASSMANN WSW P/N
Consistent
Consistent

NOTES: e.g. 1620-16 means Year 2016 , 20 means the 20th week of the year 2016

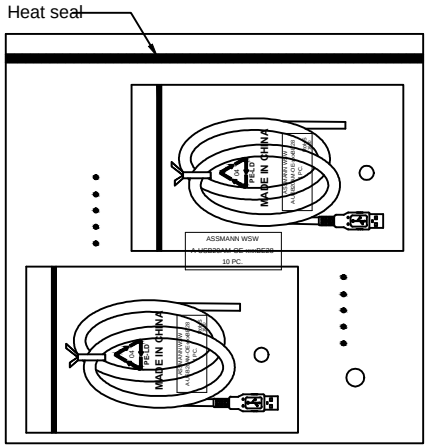

10PCS/Middle PE bag
Post 1PCS label on middle PE bag

Content of the label
on middle PE bag:

ASSMANN WSW
A-USB20AM-OE-xxxBE28
10 PC.

Code label posted onto
carton side

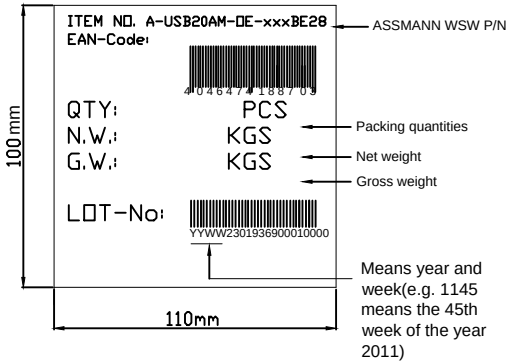

Sealing adhesive tapes

Code label posted onto left
front corner of carton side x2
(on both side）

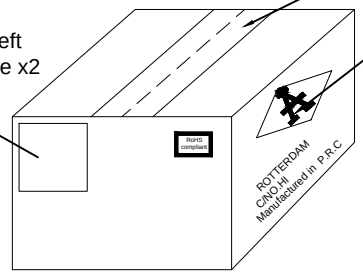

REQUIREMENT FOR
FRONT SIDE OF CARTON

PORT.NAME:
(by sea) ROTTERDAM
(by air) COLOGNE
(by Fedex or UPS) Ludenscheid

Packing information:

1).Wrapping 1pcs cable, then tying.
2).Packing 1pcs finished goods into 1pcs samll PE bag.
3).Packing 10pcs small PE bag into1pcs middle PE bag.
4).Place 1pcs water-proof PE bag into carton and 1pcs paperboard in bottom and top of carton respectively.
5).Carton spec.: 40*30*25CM

RoHS compliant

Unit: mm

Scale	Free					Date	Name	Customer-No.
TOLERANCE					Drawn	09.10.2018	Xavier	
					Approved	09.10.2018	Winnie	ASSMANN WSW-No. A-USB20AM-OE-xxxBE28
DIM	TOL							Drawing-No. ASS 8364 CA rev00
		⓪	Drawn	09.10.2018	Xavier			
Angle	TOL	Id.	Modification	Date	Name			Replace / Sheet 2/2

ASSMANN WSW components

CAB0903

Downloaded from Arrow.com.