# Data Sheet | Item Number: 282-901

2-conductor through terminal block; 6 mm²; center marking; for DIN-rail 35 x 15 and 35 x 7.5; CAGE CLAMP®; 6,00 mm²; gray

https://www.wago.com/282-901

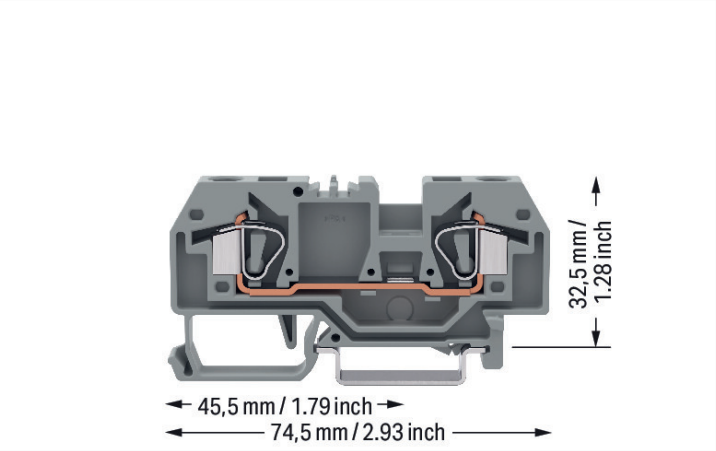


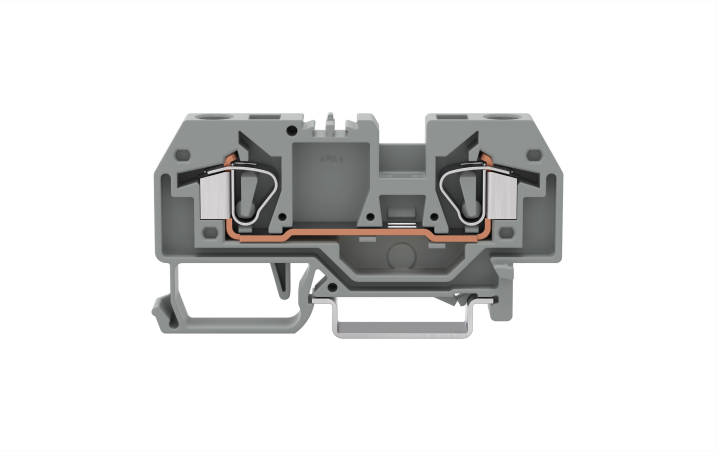

Color: gray

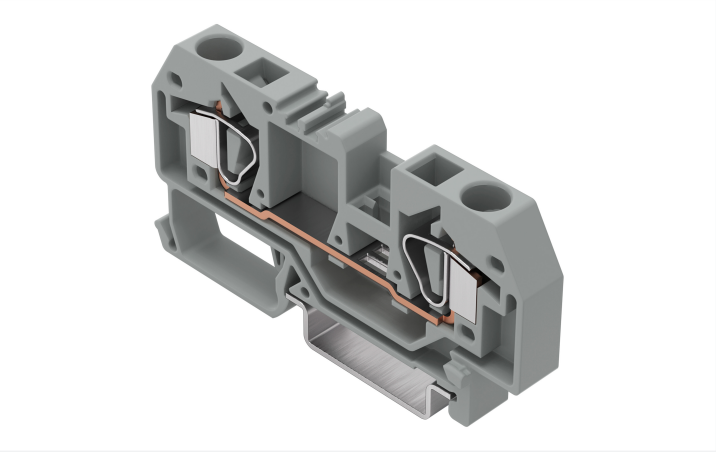

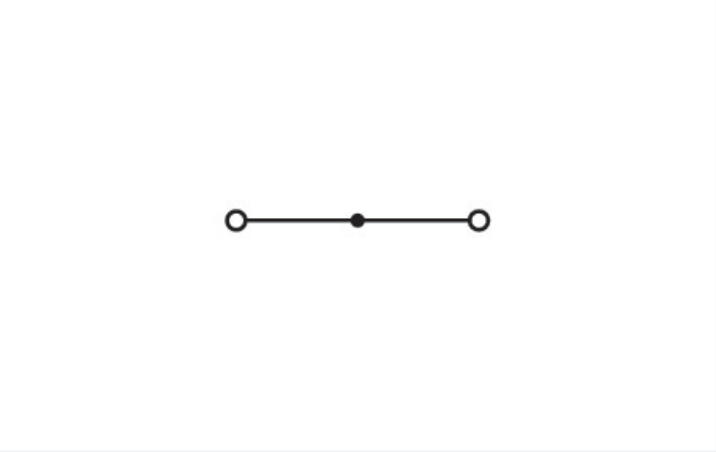

Similar to illustration

Through terminal block, 282 Series, operating tool

Easily, quickly and safely connect conductors with this through terminal block (item number 282-901). Ensure that the strip lengths are between 12 and 13 mm when connecting conductors to this through terminal block. Whether for industrial or building applications, you can use our through terminal blocks to connect electrical conductors quickly and safely. We offer variants for both classic through-wiring and potential distribution. This product features conductor terminals and utilizes CAGE CLAMP®. Our CAGE CLAMP® connection provides a secure and maintenance-free way to connect all types of conductors. You do not need to prepare the conductor in any way, such as crimping ferrules. This through terminal block is suitable for conductor cross sections ranging from 0.2 mm² to 6 mm².

This through rail-mount terminal block is operated with an operating tool.


Downloaded from Arrow.com.

## Electrical data

| Ratings per | IEC/EN 60947-7-1 | | |
|---|---|---|---|
| Overvoltage category | III | III | II |
| Pollution degree | 3 | 2 | 2 |
| Nominal voltage | 800 V | - | - |
| Rated impulse withstand voltage | 8 kV | - | - |
| Rated current | 41 A | - | - |

| Power Loss | |
|---|---|
| Power loss, per pole (potential) | 1.3112 W |
| Rated current $I_N$ for power loss specification | 41 A |
| Resistance value for specified, current-dependent power loss | 0.00078 Ω |

| General information | |
|---|---|
| Wiring direction | Front-entry wiring |

## Connection Data

| | |
|---|---|
| Clamping units | 2 |
| Total number of potentials | 1 |
| Number of levels | 1 |

| Connection 1 | |
|---|---|
| Connection technology | CAGE CLAMP® |
| Actuation type | Operating tool |
| Connectable conductor materials | Copper |
| Solid conductor | 0.2 … 6 mm² / 24 … 10 AWG |
| Fine-stranded conductor | 0.2 … 6 mm² / 24 … 10 AWG |
| Strip length | 12 … 13 mm / 0.47 … 0.51 inches |
| Wiring direction | Front-entry wiring |

## Physical data

| | |
|---|---|
| Width | 8 mm / 0.315 inches |
| Height | 74.5 mm / 2.933 inches |
| Depth from upper-edge of DIN-rail | 32.5 mm / 1.28 inches |

## Mechanical data

| | |
|---|---|
| Mounting type | DIN-35 rail |
| Marking level | Center marking |

## Material data

| | |
|---|---|
| Note (material data) | Information on material specifications can be found here |
| Color | gray |
| Material group | I |
| Insulation material (main housing) | Polyamide (PA66) |
| Flammability class per UL94 | V0 |
| Fire load | 0.24 MJ |
| Weight | 15.8 g |


Downloaded from Arrow.com.

## Environmental requirements

| | |
|---|---|
| Processing temperature | -35 … +85 °C |
| Continuous operating temperature | -60 … +105 °C |

## Commercial data

| | |
|---|---|
| PU (SPU) | 50 pcs |
| Packaging type | Box |
| Country of origin | PL |
| GTIN | 4044918445801 |
| Customs tariff number | 85369010000 |

## Product Classification

| | |
|---|---|
| UNSPSC | 39121410 |
| eCl@ss 10.0 | 27-14-11-20 |
| eCl@ss 9.0 | 27-14-11-20 |
| ETIM 9.0 | EC000897 |
| ETIM 10.0 | EC000897 |
| ECCN | NO US CLASSIFICATION |

## Environmental Product Compliance

| | |
|---|---|
| RoHS Compliance Status | Compliant,No Exemption |

## Approvals / Certificates

### General approvals

| Approval | Standard | Certificate Name |
|---|---|---|
| CCA<br>DEKRA Certification B.V. | EN 60947 | NTR NL 8027 |
| KEMA/KEUR<br>DEKRA Certification B.V. | EN 60947 | 71-136074 |
| UL<br>Underwriters Laboratories Inc. | UL 1059 | 20190731-E45172 |

### Approvals for marine applications

| Approval | Standard | Certificate Name |
|---|---|---|
| ABS<br>American Bureau of Shipping | EN 60947 | 24-0152298-PDA |
| BV<br>Bureau Veritas S.A. | EN 60947 | 07436/G0 BV |
| DNV GL<br>Det Norske Veritas, Germanischer Lloyd | - | TAE00001V2 |
| PRS<br>Polski Rejestr Statków | - | TE/1094/880590/23 |

### Declarations of conformity and manufacturer's declarations

| Approval | Standard | Certificate Name |
|---|---|---|
| EU-Declaration of Conformity<br>WAGO GmbH & Co. KG | - | - |
| UK-Declaration of Conformity<br>WAGO GmbH & Co. KG | - | - |


Downloaded from Arrow.com.

## Downloads

### Environmental Product Compliance

**Compliance Search**

Environmental Product Compliance 282-901

### Documentation

**Bid Text**

| | | | |
|---|---|---|---|
| 282-901 | 19.02.2019 | xml 3.18 KB | |
| 282-901 | 28.02.2017 | doc 24.00 KB | |

### CAD/CAE-Data

**CAD data**

2D/3D Models 282-901

**CAE data**

EPLAN Data Portal 282-901

WSCAD Universe 282-901

ZUKEN Portal 282-901

## 1 Compatible Products

### 1.1 Required Accessories

#### 1.1.1 End plate

##### 1.1.1.1 End plate

Item No.: 282-325
End and intermediate plate; 2.5 mm thick; gray

Item No.: 282-328
End and intermediate plate; 2.5 mm thick; orange

Item No.: 282-326
Separator plate; 2 mm thick; oversized; gray

Item No.: 282-329
Separator plate; 2 mm thick; oversized; orange

Item No.: 282-357
Step-down cover plate; 1 mm thick; in connection with 2-conductor 282-901 terminal blocks; gray

Item No.: 282-367
Step-down cover plate; 1 mm thick; in connection with 2-conductor 282-901 terminal blocks; orange


Downloaded from Arrow.com.

## 1.2 Optional Accessories

### 1.2.1 DIN-rail

#### 1.2.1.1 Mounting accessories

Item No.: 210-196
Aluminum carrier rail; 35 x 8.2 mm; 1.6 mm thick; 2 m long; unslotted; similar to EN 60715; silver-colored

Item No.: 210-198
Copper carrier rail; 35 x 15 mm; 2.3 mm thick; 2 m long; unslotted; according to EN 60715; copper-colored

Item No.: 210-508
Steel carrier rail; 35 x 15 mm; 1.5 mm thick; 2 m long; slotted; galvanized; similar to EN 60715; silver-colored

Item No.: 210-197
Steel carrier rail; 35 x 15 mm; 1.5 mm thick; 2 m long; slotted; similar to EN 60715; silver-colored

Item No.: 210-506
Steel carrier rail; 35 x 15 mm; 1.5 mm thick; 2 m long; unslotted; galvanized; similar to EN 60715; silver-colored

Item No.: 210-114
Steel carrier rail; 35 x 15 mm; 1.5 mm thick; 2 m long; unslotted; similar to EN 60715; silver-colored

Item No.: 210-118
Steel carrier rail; 35 x 15 mm; 2.3 mm thick; 2 m long; unslotted; according to EN 60715; silver-colored

Item No.: 210-115
Steel carrier rail; 35 x 7.5 mm; 1 mm thick; 2 m long; slotted; according to EN 60715; "Hole width 18 mm; silver-colored

Item No.: 210-112
Steel carrier rail; 35 x 7.5 mm; 1 mm thick; 2 m long; slotted; according to EN 60715; "Hole width 25 mm; silver-colored

Item No.: 210-504
Steel carrier rail; 35 x 7.5 mm; 1 mm thick; 2 m long; slotted; galvanized; according to EN 60715; silver-colored

Item No.: 210-113
Steel carrier rail; 35 x 7.5 mm; 1 mm thick; 2 m long; unslotted; according to EN 60715; silver-colored

Item No.: 210-505
Steel carrier rail; 35 x 7.5 mm; 1 mm thick; 2 m long; unslotted; galvanized; according to EN 60715; silver-colored

### 1.2.2 Ferrule

#### 1.2.2.1 Ferrule



Item No.: 216-262
Ferrule; Sleeve for 0.75 mm² / 18 AWG; insulated; electro-tin plated; electrolytic copper; gastight crimped; acc. to DIN 46228, Part 4/09.90; gray



Item No.: 216-263
Ferrule; Sleeve for 1 mm² / AWG 18; insulated; electro-tin plated; electrolytic copper; gastight crimped; acc. to DIN 46228, Part 4/09.90; red

Item No.: 216-264
Ferrule; Sleeve for 1.5 mm² / AWG 16; insulated; electro-tin plated; electrolytic copper; gastight crimped; acc. to DIN 46228, Part 4/09.90; black

Item No.: 216-266
Ferrule; Sleeve for 2.5 mm² / AWG 14; insulated; electro-tin plated; electrolytic copper; gastight crimped; acc. to DIN 46228, Part 4/09.90; blue

Item No.: 216-267
Ferrule; Sleeve for 4 mm² / AWG 12; insulated; electro-tin plated; electrolytic copper; gastight crimped; acc. to DIN 46228, Part 4/09.90; gray

### 1.2.3 Installation

#### 1.2.3.1 Cover

Item No.: 709-153
Cover; Type 1; suitable for cover carrier, type 1; 1 m long; transparent


Downloaded from Arrow.com.

### 1.2.3.2 Cover carrier

Item No.: 709-167
Cover carrier; Type 1; incl. fixing/retaining screws and knurled nut; suitable for 279 to 282 and 880 Series rail-mounted terminal blocks; suitable for 264 Series miniature rail-mounted terminal blocks; suitable for 270 Series sensor and actuator terminal blocks; gray

### 1.2.3.3 Mounting accessories

Item No.: 209-106
Mounting carrier; for isolated mounting on DIN 35 rails; gray

Item No.: 249-116
Screwless end stop; 6 mm wide; for DIN-rail 35 x 15 and 35 x 7.5; gray

## 1.2.4 Jumper

### 1.2.4.1 Jumper

Item No.: 282-402
Jumper; insulated; gray

Item No.: 282-409
Jumper; insulated; gray

Item No.: 282-424
Jumper; insulated; orange

Item No.: 282-422
Jumper; insulated; yellow-green

Item No.: 284-414
Step-down jumper; from 284/282 to 281/280/279 series; insulated; gray

Item No.: 284-413
Step-down jumper; from 284/282 to 282/281 series; insulated; gray

Item No.: 709-110
Wire commoning chain; 2.5 mm²; insulated; black

Item No.: 709-111
Wire commoning chain; 2.5 mm²; insulated; black

Item No.: 709-112
Wire commoning chain; 2.5 mm²; insulated; black

## 1.2.5 Marking

### 1.2.5.1 Group marker carrier

Item No.: 209-143
Group marker carrier; gray

Item No.: 209-144
Group marker carrier; gray

Item No.: 249-105
Group marker carrier; gray

### 1.2.5.2 Marker

Item No.: 793-5501/000-006
WMB marking card; as card; for terminal block width 5 - 17.5 mm; stretchable 5 - 5.2 mm; plain; snap-on type; blue

Item No.: 793-5501/000-014
WMB marking card; as card; for terminal block width 5 - 17.5 mm; stretchable 5 - 5.2 mm; plain; snap-on type; brown

Item No.: 793-5501/000-007
WMB marking card; as card; for terminal block width 5 - 17.5 mm; stretchable 5 - 5.2 mm; plain; snap-on type; gray

Item No.: 793-5501/000-023
WMB marking card; as card; for terminal block width 5 - 17.5 mm; stretchable 5 - 5.2 mm; plain; snap-on type; green

Item No.: 793-5501/000-017
WMB marking card; as card; for terminal block width 5 - 17.5 mm; stretchable 5 - 5.2 mm; plain; snap-on type; light green

Item No.: 793-5501/000-012
WMB marking card; as card; for terminal block width 5 - 17.5 mm; stretchable 5 - 5.2 mm; plain; snap-on type; orange

Item No.: 793-5501/000-005
WMB marking card; as card; for terminal block width 5 - 17.5 mm; stretchable 5 - 5.2 mm; plain; snap-on type; red

Item No.: 793-5501/000-024
WMB marking card; as card; for terminal block width 5 - 17.5 mm; stretchable 5 - 5.2 mm; plain; snap-on type; violet


Downloaded from Arrow.com.

### 1.2.5.2 Marker



Item No.: 793-5501
WMB marking card; as card; for terminal block width 5 - 17.5 mm; stretchable 5 - 5.2 mm; plain; snap-on type; white

Item No.: 793-5501/000-002
WMB marking card; as card; for terminal block width 5 - 17.5 mm; stretchable 5 - 5.2 mm; plain; snap-on type; yellow

Item No.: 793-501/000-006
WMB marking card; as card; not stretchable; plain; snap-on type; blue

Item No.: 793-501/000-007
WMB marking card; as card; not stretchable; plain; snap-on type; gray

Item No.: 793-501/000-023
WMB marking card; as card; not stretchable; plain; snap-on type; green

Item No.: 793-501/000-017
WMB marking card; as card; not stretchable; plain; snap-on type; light green

Item No.: 793-501/000-012
WMB marking card; as card; not stretchable; plain; snap-on type; orange

Item No.: 793-501/000-005
WMB marking card; as card; not stretchable; plain; snap-on type; red

Item No.: 793-501/000-024
WMB marking card; as card; not stretchable; plain; snap-on type; violet



Item No.: 793-501
WMB marking card; as card; not stretchable; plain; snap-on type; white

Item No.: 793-501/000-002
WMB marking card; as card; not stretchable; plain; snap-on type; yellow

Item No.: 2009-115/000-006
WMB-Inline; for Smart Printer; 1500 pieces on roll; stretchable 5 - 5.2 mm; plain; snap-on type; blue

Item No.: 2009-115/000-007
WMB-Inline; for Smart Printer; 1500 pieces on roll; stretchable 5 - 5.2 mm; plain; snap-on type; gray

Item No.: 2009-115/000-023
WMB-Inline; for Smart Printer; 1500 pieces on roll; stretchable 5 - 5.2 mm; plain; snap-on type; green

Item No.: 2009-115/000-017
WMB-Inline; for Smart Printer; 1500 pieces on roll; stretchable 5 - 5.2 mm; plain; snap-on type; light green

Item No.: 2009-115/000-012
WMB-Inline; for Smart Printer; 1500 pieces on roll; stretchable 5 - 5.2 mm; plain; snap-on type; orange

Item No.: 2009-115/000-024
WMB-Inline; for Smart Printer; 1500 pieces on roll; stretchable 5 - 5.2 mm; plain; snap-on type; violet

Item No.: 2009-115
WMB-Inline; for Smart Printer; 1500 pieces on roll; stretchable 5 - 5.2 mm; plain; snap-on type; white

Item No.: 2009-115/000-002
WMB-Inline; for Smart Printer; 1500 pieces on roll; stretchable 5 - 5.2 mm; plain; snap-on type; yellow

## 1.2.6 Protective warning marker

### 1.2.6.1 Cover

Item No.: 282-415
Protective warning marker; for 5 terminal blocks; with high-voltage symbol, black; yellow

## 1.2.7 Test and measurement

### 1.2.7.1 Testing accessories

Item No.: 709-311
B-type spacer module; modular; e.g., for bridging commoned terminal blocks; gray

Item No.: 709-310
B-type test plug module; modular; suitable for all WAGO 282 Series rail-mounted terminal blocks with jumper slots; 6,00 mm²; gray

Item No.: 209-170
Test plug adapter; 8.3 mm wide; for 4 mm Ø test plugs; suitable for 1.5 mm² - 10 mm² tbs; gray


Downloaded from Arrow.com.

### 1.2.8 Tool

#### 1.2.8.1 Operating tool

Item No.: 210-721
Operating tool; Blade: 5.5 x 0.8 mm; with a partially insulated shaft; multicoloured

## Installation Notes

### Installation

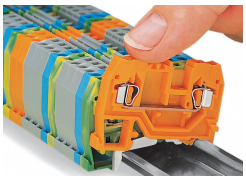

Snapping a terminal block onto the DIN-rail.

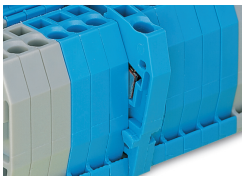

Quick assembly keys prevent reverse mounting.

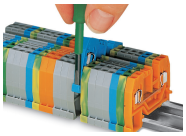

Removing a terminal block from the assembly.

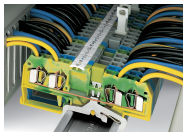

Steel DIN-rails are not suited for PEN (ground and N-conductor) applications per EN 60947-7-2 (VDE 0611, Part 3).

### Conductor termination

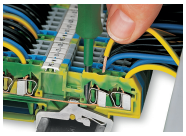

**CAGE CLAMP® connection**
Inserting a conductor.

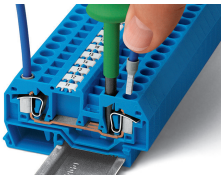

**CAGE CLAMP® connection**
Inserting a conductor.
With ferruled conductors, it is necessary to use a terminal block one size larger than the conductor's nominal cross-section.

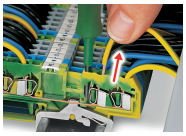

**CAGE CLAMP® connection**
Removing a solid conductor.

### Commoning

Commoning using an adjacent jumper.
Push jumper down until fully inserted!

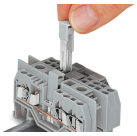

Commoning terminal blocks of different sizes via step-down jumpers.

### Testing

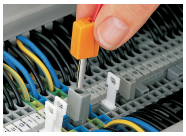

Testing with a test plug.
Picture shows a test plug adapter (209-170).

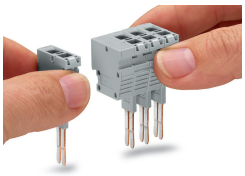

Snapping test plug and spacer modules together to assemble a multi-pole test plug module (max. 10 poles) for 8 mm terminal block width.

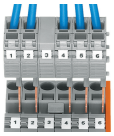

Test plug modules are directly plugged into the jumper contact slot of the current bar (picture shows 282 Series).


Downloaded from Arrow.com.

## Cover

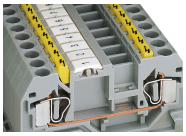

Protective warning markers inserted into the operating slots

## Marking

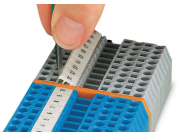

Labeling via WMB Multi Marking System.


Downloaded from Arrow.com.